# ASSEMBLY INSTRUCTIONS

# BATH VANITY- CABINET

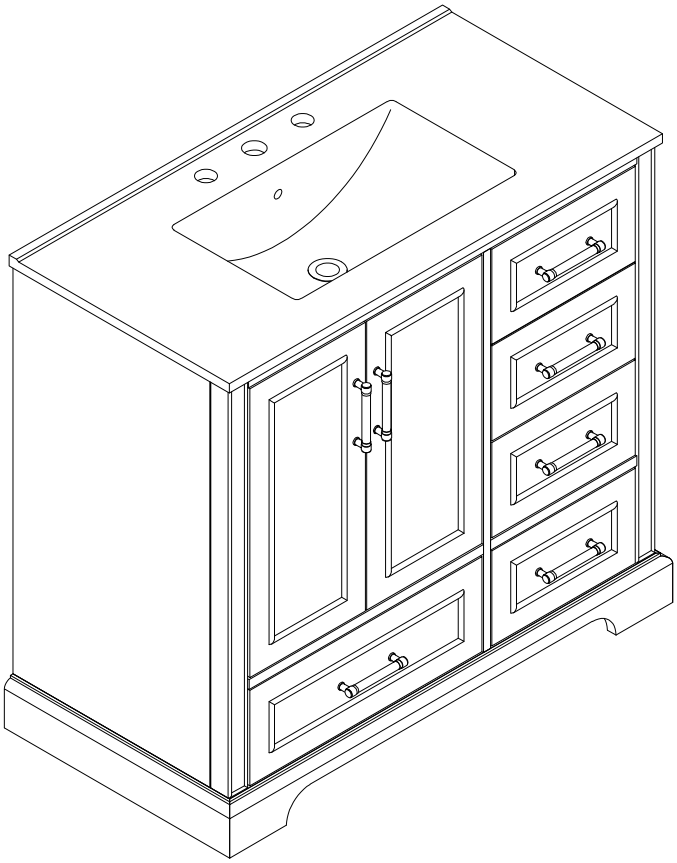

Thank you for purchasing this quality product. Be sure to check all packing material carefully for small parts which may have come loose inside the carton during shipment. Separate, identify and count all parts and hardware.
Compare with the parts list to be sure all parts are present.
DO NOT TIGHTEN SCREWS UNTIL COMPLETELY ASSEMBLED

*Use of power tool to assemble this product will invalidate any claim and damage this product making unsafe!!!
* Please assemble on a clean soft surface to avoid damage.

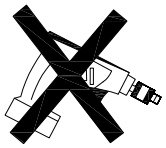

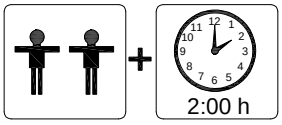


Tools Required

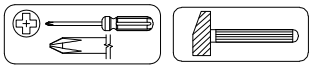

(Not included) (Not included)

**IMPORTANT:**
**PLEASE READ INSTRUCTION BEFORE STARTING THE ASSEMBLY**

# PLEASE DO NOT RETURN TO STORE

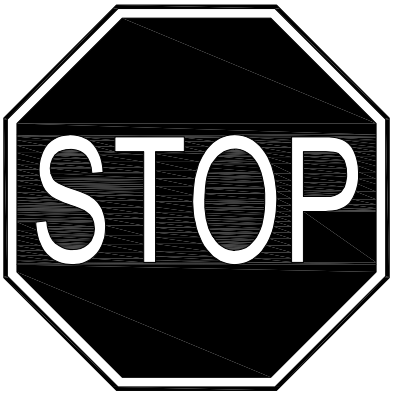


**Please do not return this product to the retailer!!**
**We are able to assist you in ANY way**

If you find that you have any trouble with assembly or missing or damaged parts please contact the seller.

# Before Installation

Thank you for purchasing this quality product. Be sure to check all packing materials carefully for small parts, which may have come loose inside the carton during shipment. Identify and count all items according to the PARTS LIST and/or HARDWARE LIST shown below. Check you have all the components and tools listed on the following pages.

• We recommend that you assemble this product with the assistance of another person; this will make the assembly easier, and will help eliminate damage to the product or injury to persons during assembly.

• Please do not over tighten screws or bolts until the assembly is completed.

• Keep children and animal away from the work area, small parts could choke if swallowed.

• Please put all parts on a non-abrasive floor before assembly,and follow the assembly steps to assemble your newly purchased product correctly and efficently.

## Cam Lock Assembly Instructions

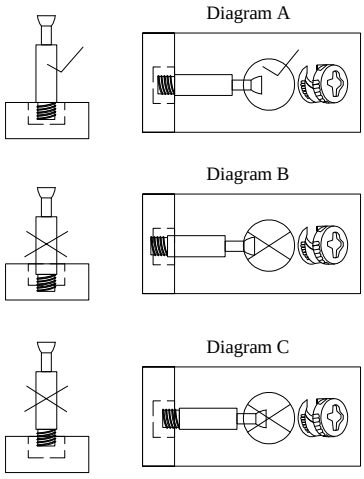


Insert Cam Ball into hole as shown in diagram A.

Make sure not to insert the Cam Bolt:
Too deep as shown in figure B as this will cause the cam Lock to be misaligned and unable to interock properly.

Also avoid inserting the Cam Bolt too close to the surface of the hole as shown in figure C, as this will cause the Cam Lock to be too loose, and not interlock properly.

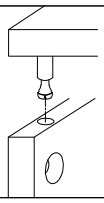

Connect the panels together.

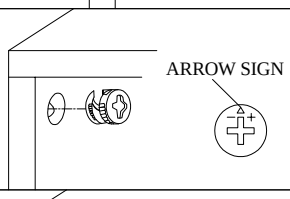


Insert the Cam Lock so the side opening fits over the head of the Cam Bolt.

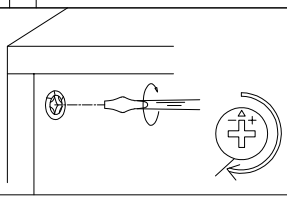

To tighten the Cam Lock, turn it clockwise on half a turn with a flat screwdriver.
**Do not use an automatic screwdriver as it may bend or break if too much power is imposed.*

# Detail View

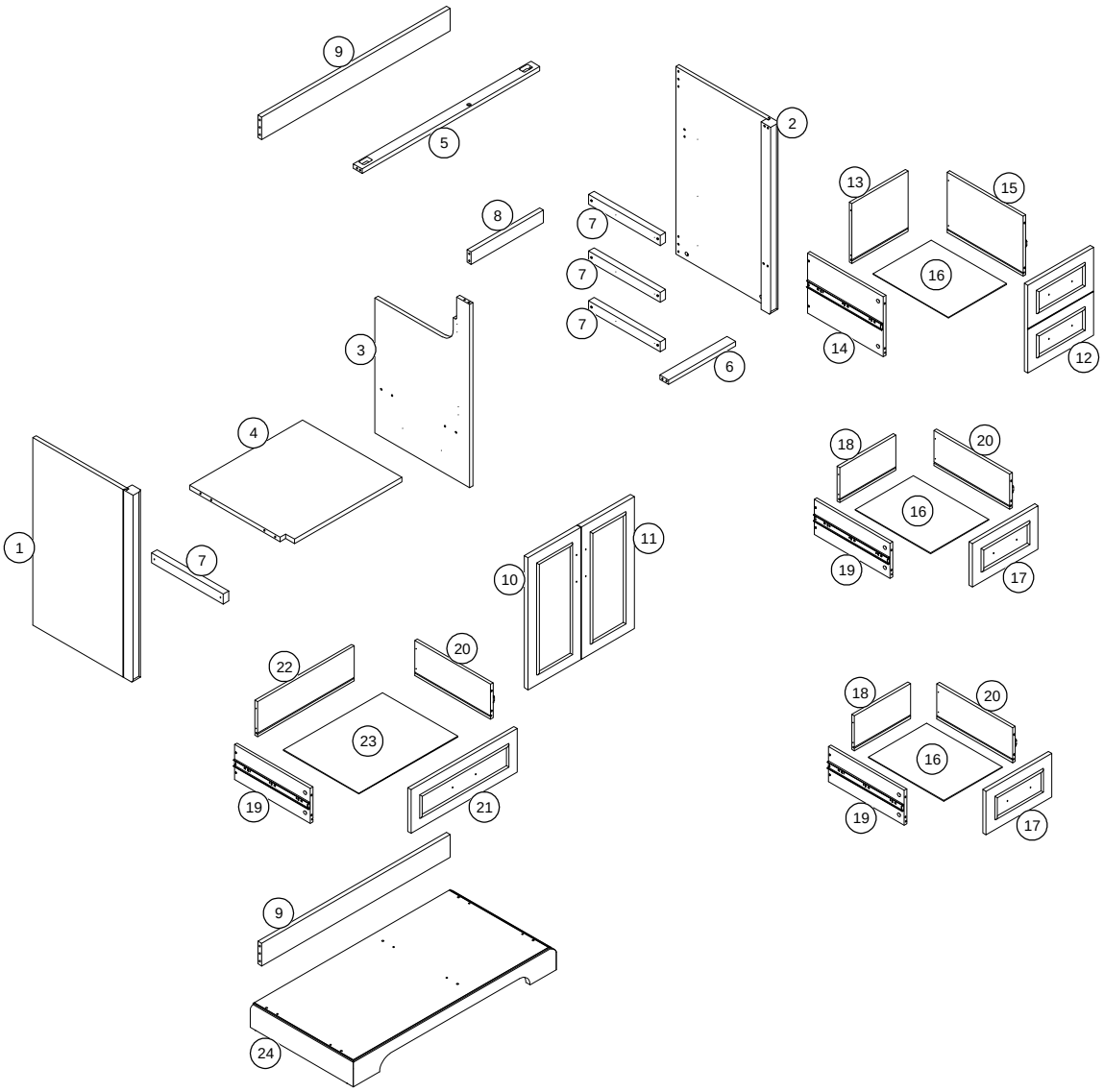


**Identifying the Hardware-Identify the hardware using the illustrations below.**

# Part Lists

| | |
|---|---|
| 1 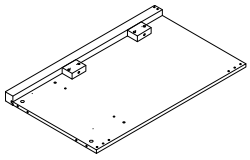 Side Panel (L) - 1pc | 2 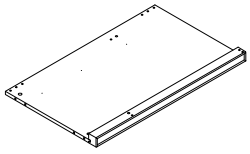 Side Panel (R) - 1pc |
| 3 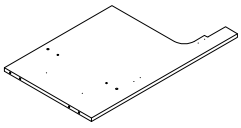 Mid Panel - 1pc | 4 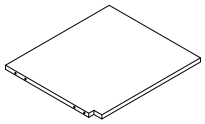 Mid Frame - 1pc |
| 5 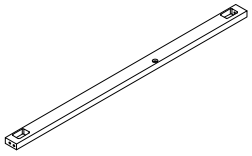 Top Front Cossbar - 1pc | 6 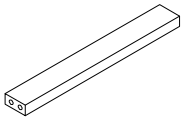 Mid Front Cossbar - 1pc |
| 7 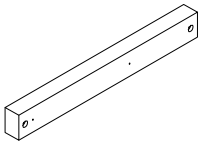 Rail Catch Bar - 4pcs | 8 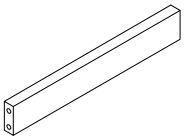 Mid Rear Crosbar - 1pc |
| 9 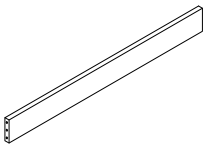 Top + Bottom Rear Crosbar - 2pcs | 10 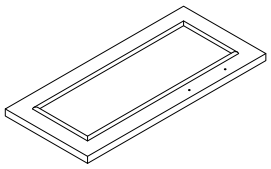 Door Cabinet (L) - 1pc |
| 11 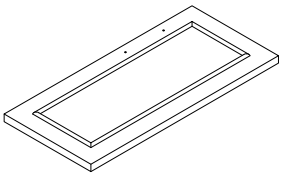 Door Cabinet (R) - 1pc | 12 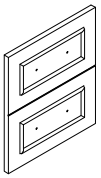 Right Top Drawer Face - 1pc |
| 13 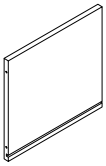 Rear Top Drawer panel - 1pc | 14 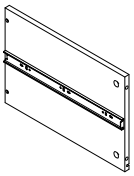 Side Top Drawer Panel (L) - 1pc |

# Part Lists

| | |
|---|---|
| 15 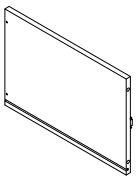 Side Top Drawer Panel (R) - 1pc | 16 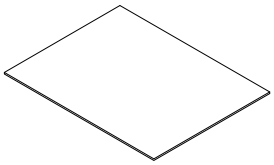 Bottom Panel - 3pcs |
| 17 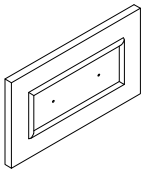 Right Mid Drawer Face - 2pcs | 18 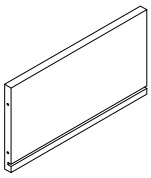 Rear Mid Drawer panel - 2pcs |
| 19 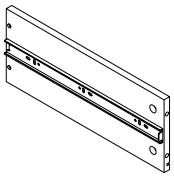 Side Mid Drawer Panel (L) - 3pcs | 20 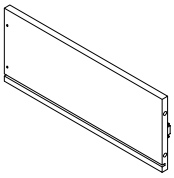 Side Mid Drawer Panel (R) - 3pcs |
| 21 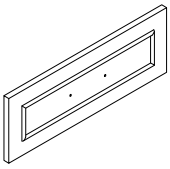 Left bottom Drawer Face - 1pc | 22 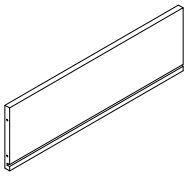 Rear Bottom Drawer panel - 1pc |
| 23 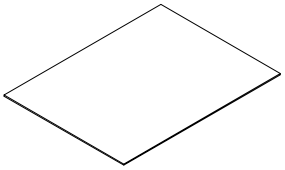 Bottom Panel - 1pc | 24 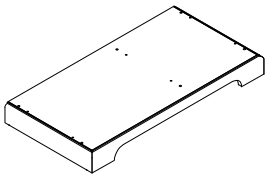 Bottom Frame - 1pc |
| 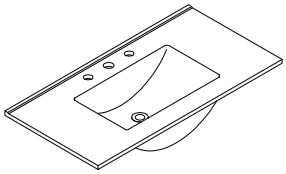 Sink - 1pc | |

# Hardware Lists

| | | |
|---|---|---|
| A<br>Ø8*30mm | B<br>Ø6*32mm | C<br>Ø14.5*9.5mm |
| Wood dowel (25pcs) | Three in on bolts (30pcs) | Three in one locks (30pcs) |
| D | E<br>Ø13xM6*30mm | F<br>K4mm |
| Damping hinge (4 sets) | Hex-Head bolt (7pcs) | Allen key (1pc) |
| G | H<br>Ø8xM4*20mm | I<br>45*12*1mm<br>45*17*14mm |
| Handle (7pcs) | Handle screw (14pcs) | Plastic Door Magnet (2 sets) |
| J<br>Ø8xØ3.5*15mm | K<br>Ø8xØ3.5*15mm | L<br>Ø10*10mm |
| Round head screw (4pcs) | Flat head screw (4pcs) | Plastic Canopy (16pcs) |
| M<br>Ø8xØ4*35mm | N<br>Ø8xØ4*30mm | O<br>Ø8xØ3.5*12mm |
| Round head screw (16pcs) | Round head screw (8pcs) | Flat head screw (24pcs) |
| P | Q | |
| Slide rail (8 pcs) | Anti fall Hardware (2 sets) | |

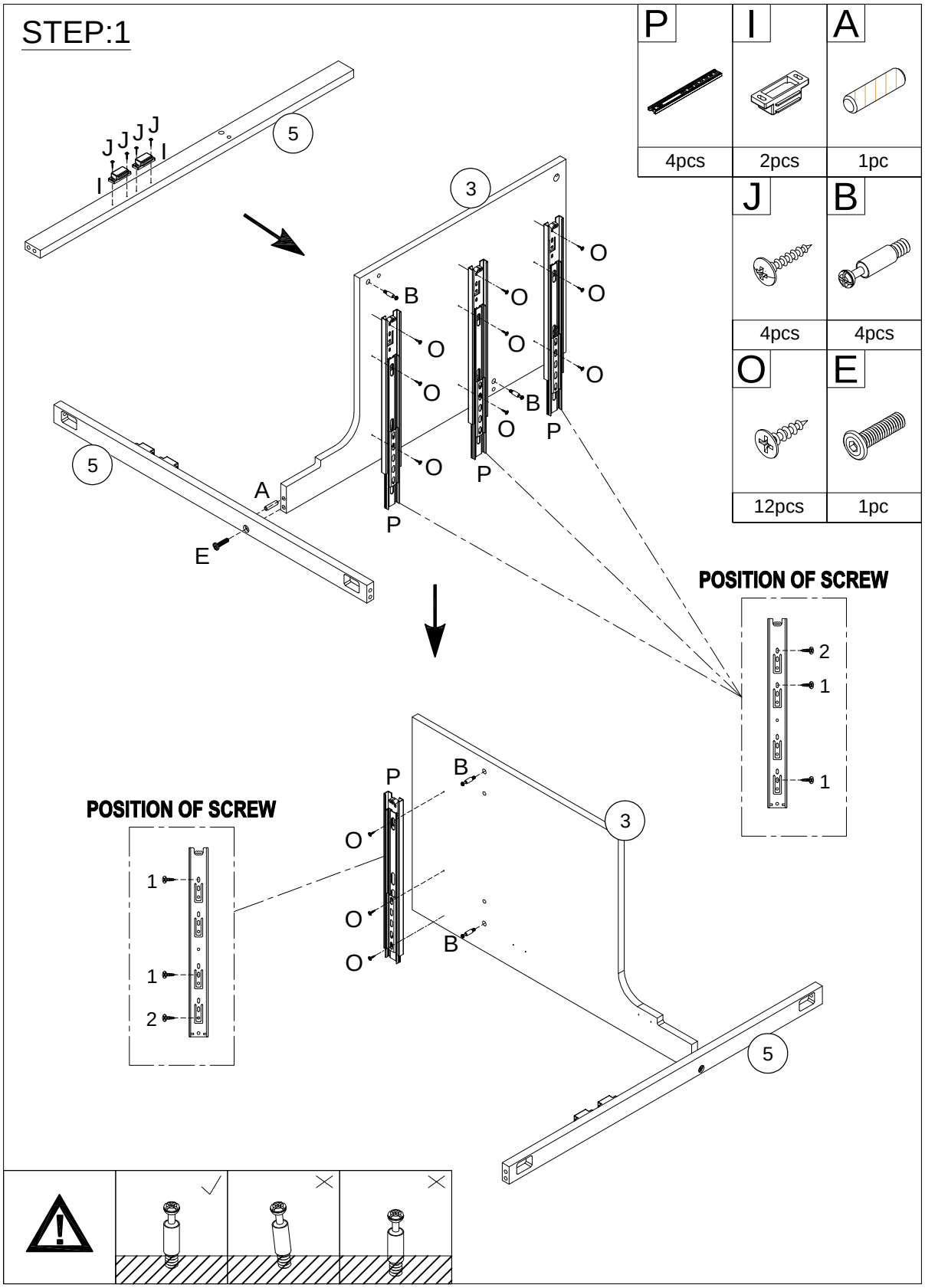
STEP:1
P
4pcs
I
2pcs
A
1pc
J
4pcs
B
4pcs
O
12pcs
E
1pc
5
3
J J J J
I
I
B
O
O
O
O
O
O
O
O
O
B
P
P
P
A
E
POSITION OF SCREW
2
1
1
POSITION OF SCREW
1
1
2
P
B
O
O
O
B
3
5

# STEP:2

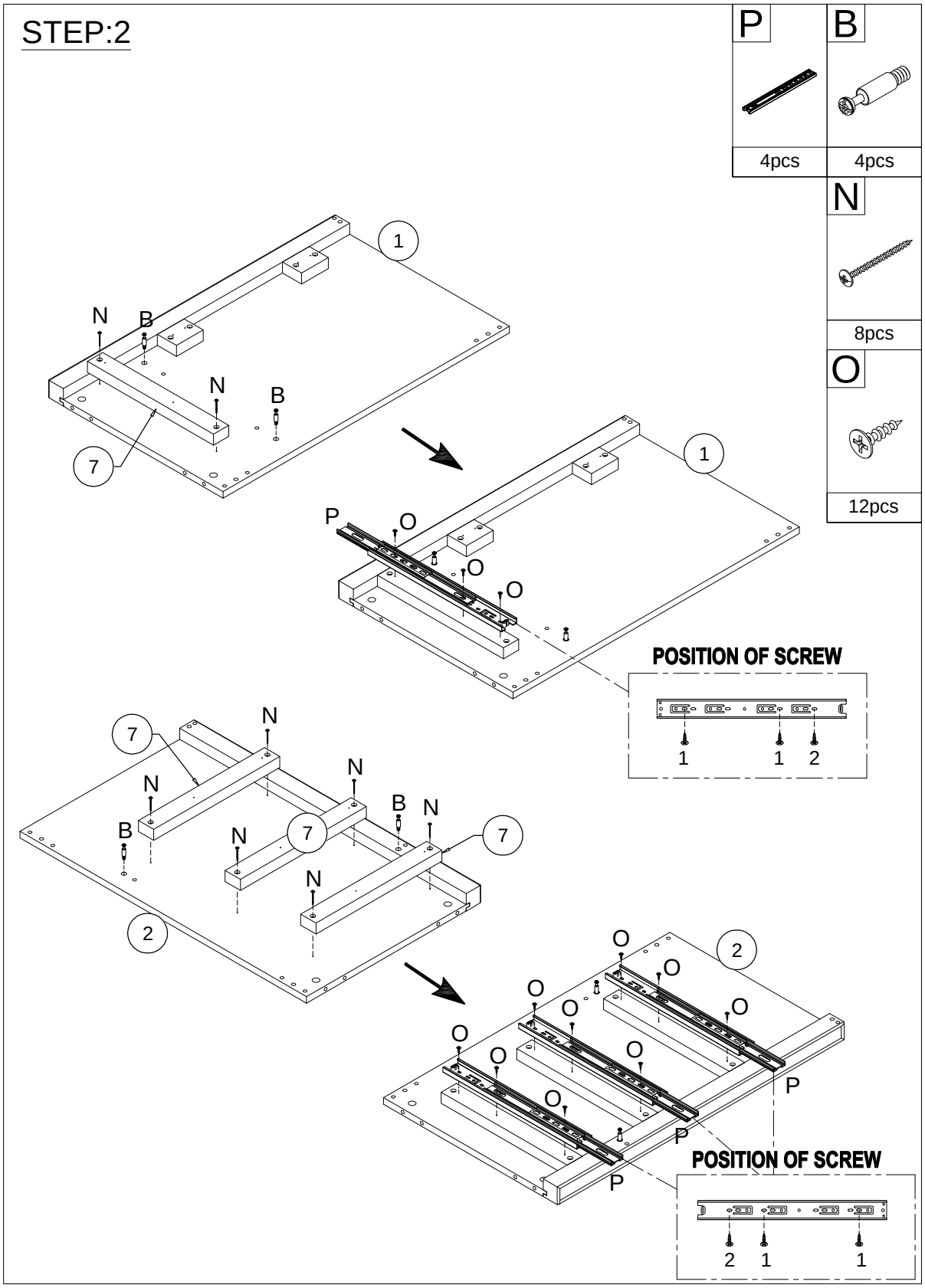
P
4pcs
B
4pcs
N
8pcs
O
12pcs
1
N
B
N
B
7
1
P
O
O
O
POSITION OF SCREW
1
1
2
7
N
N
N
B
B
N
7
7
N
2
O
2
O
O
O
O
O
O
O
O
P
P
P
POSITION OF SCREW
2
1
1

## STEP:3

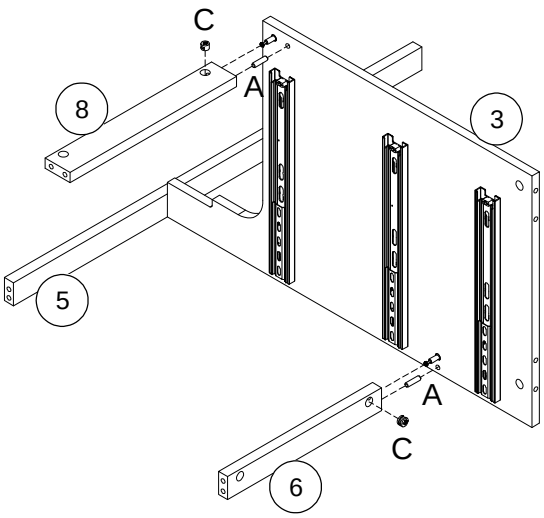


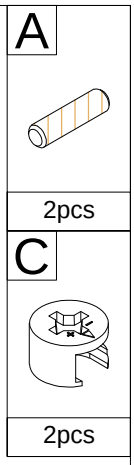


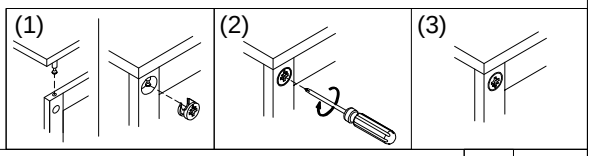


## STEP:4

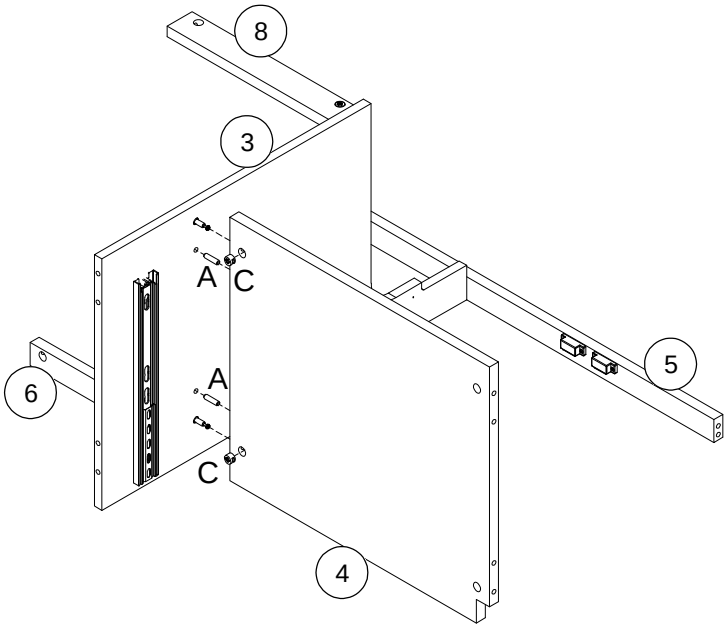


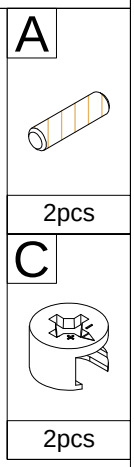

# STEP:6

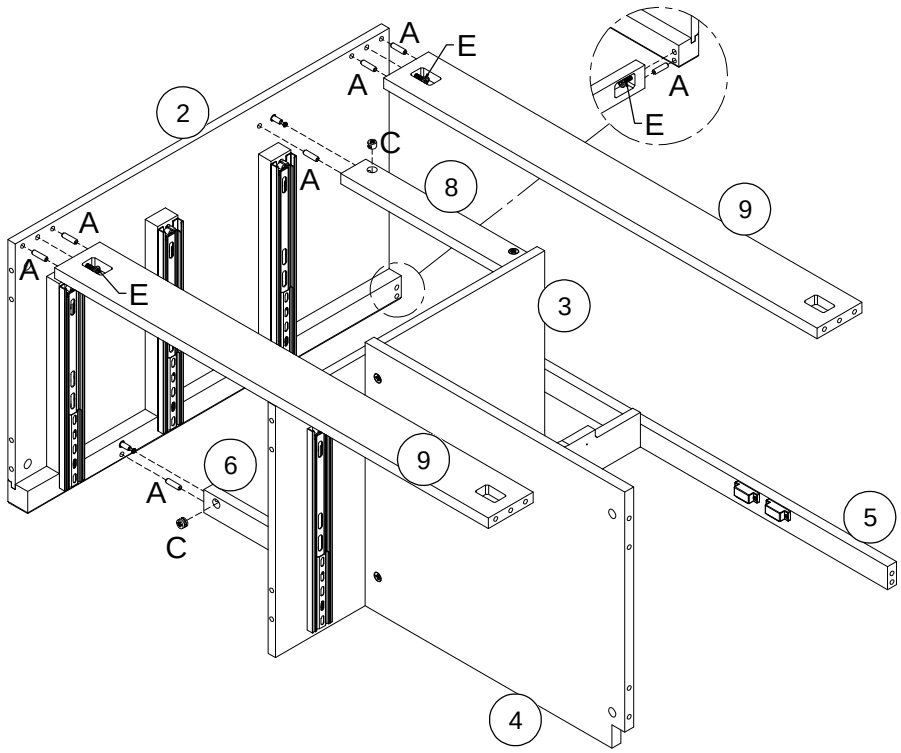


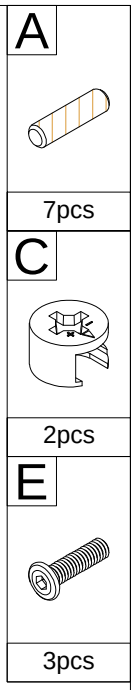

## STEP:7

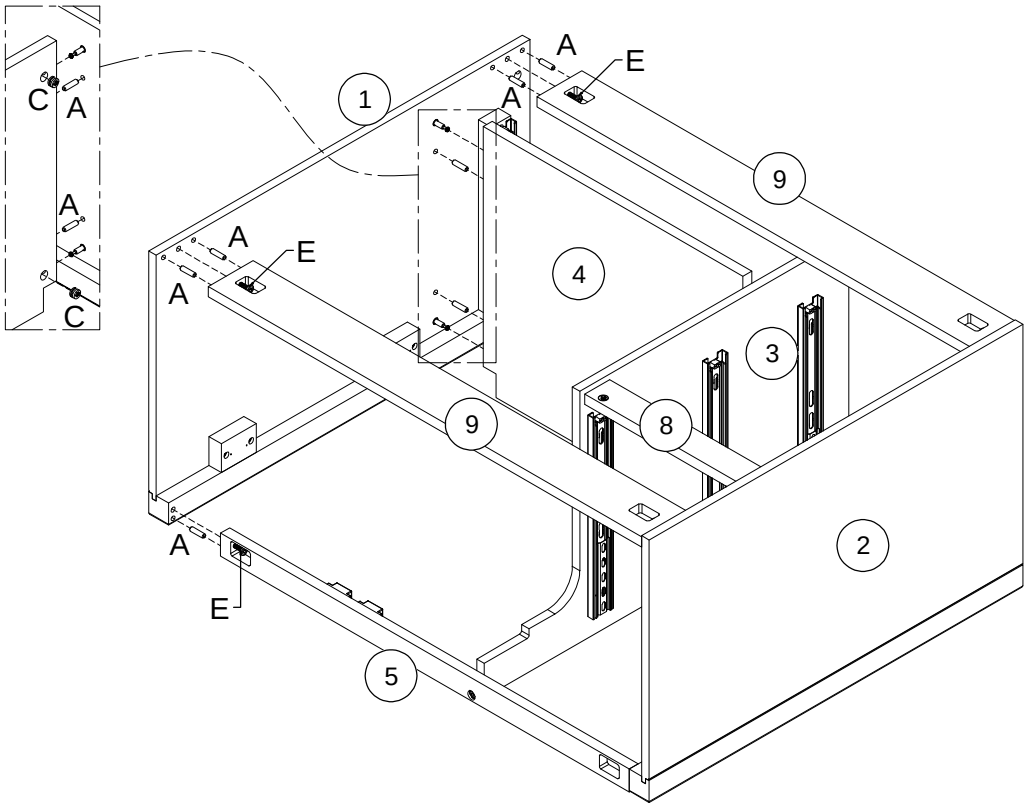


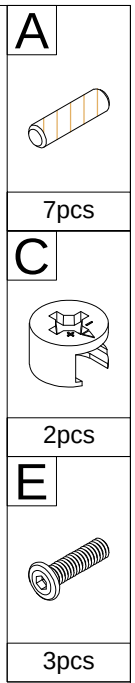


## STEP:8

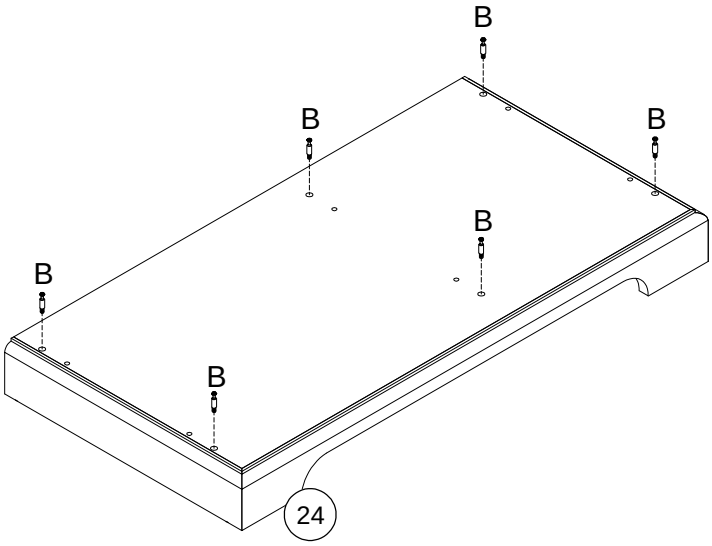


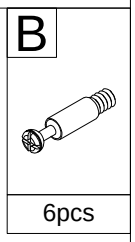

## STEP:9

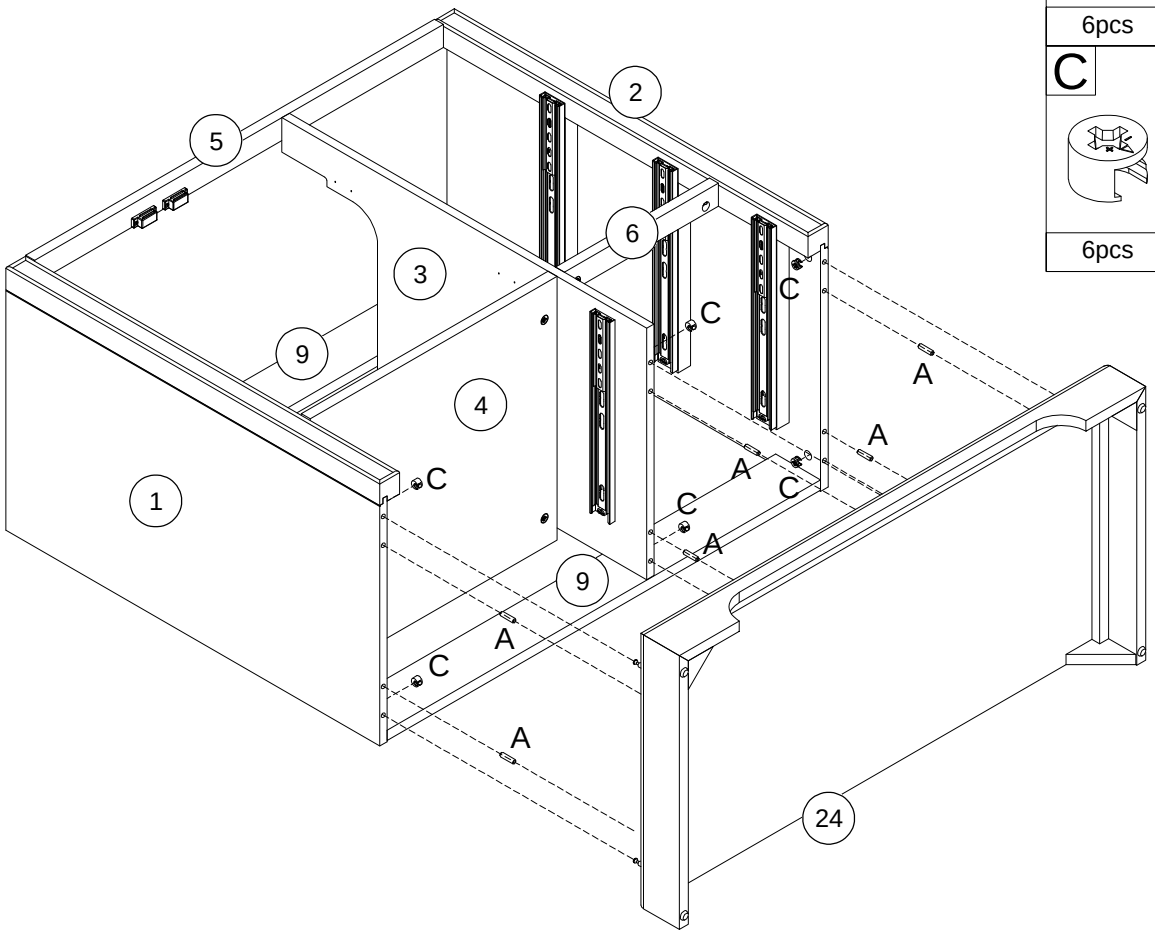


| A | C |
|---|---|
| |  |
| 6pcs | 6pcs |

## STEP:10

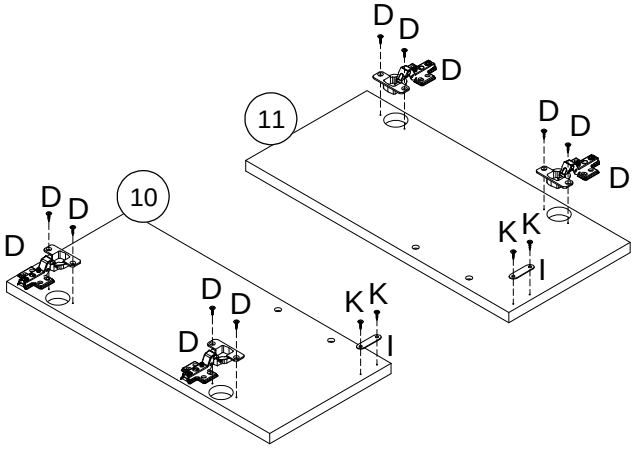


| I | D |
|---|---|
| 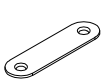 | 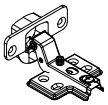 |
| 2pcs | 4pcs |
| **K** | **D** |
| | |
| 4pcs | 8pcs |

# STEP:11

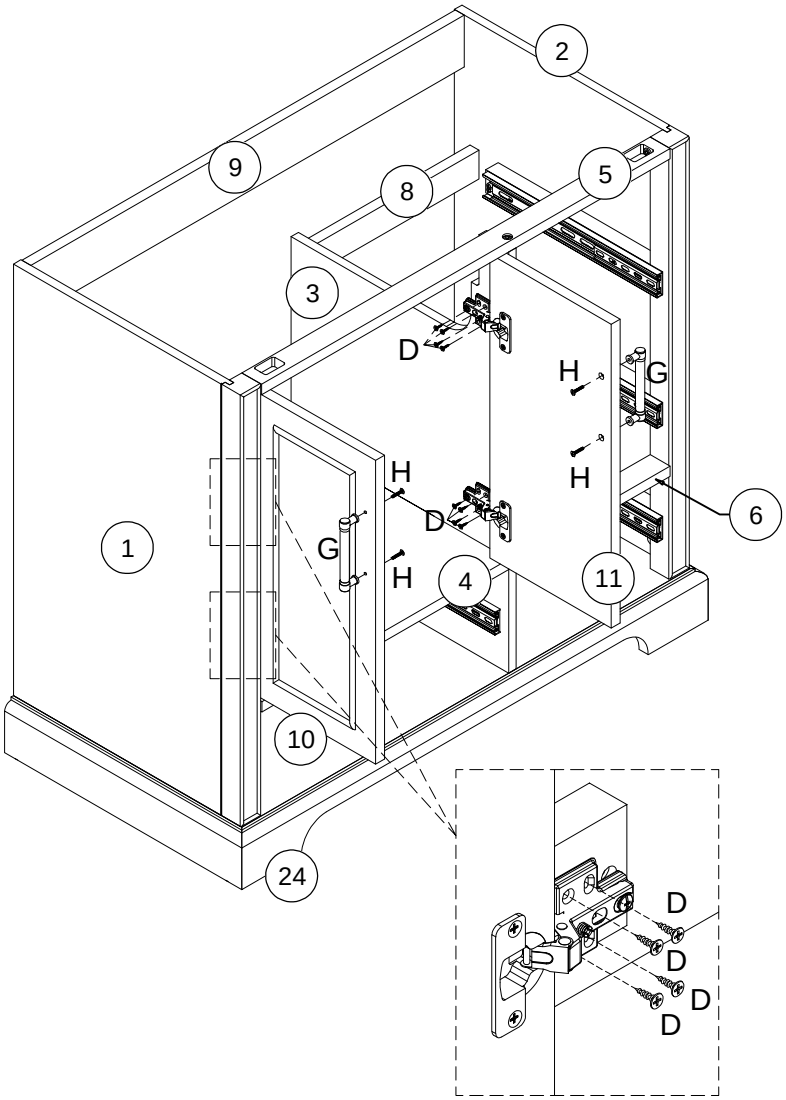
2
9
8
5
3
D
H
G
H
H
D
6
1
G
H
4
11
10
24
D
D
D
D

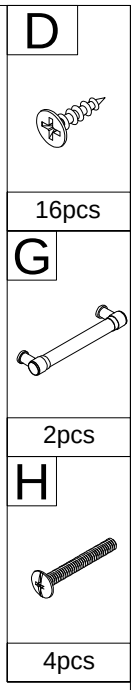
D
16pcs
G
2pcs
H
4pcs

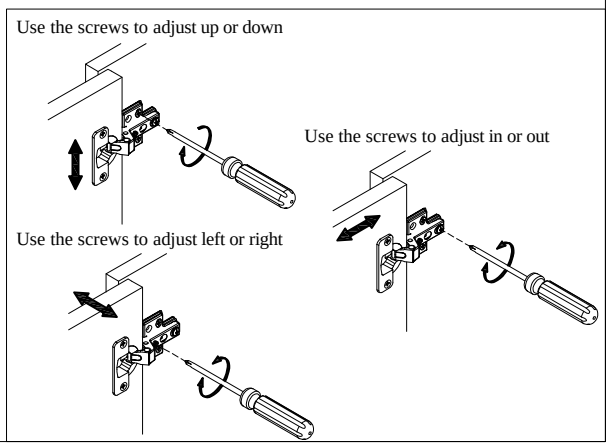
Use the screws to adjust up or down
Use the screws to adjust in or out
Use the screws to adjust left or right

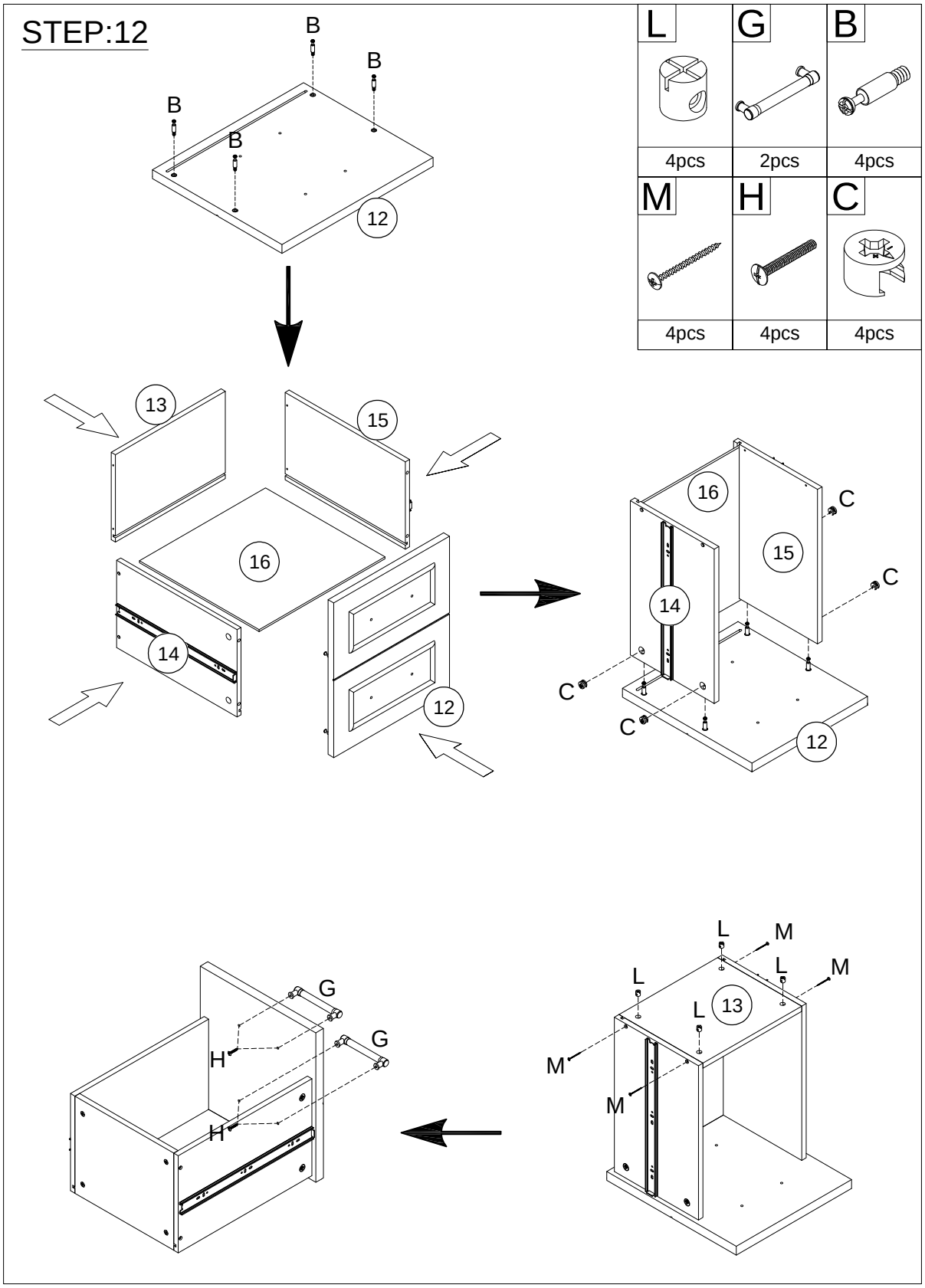
STEP:12
B
B
B
B
12
L
4pcs
G
2pcs
B
4pcs
M
4pcs
H
4pcs
C
4pcs
13
15
16
14
12
16
C
15
C
14
C
C
12
L
M
L
M
L
13
L
M
M
G
G
H
H

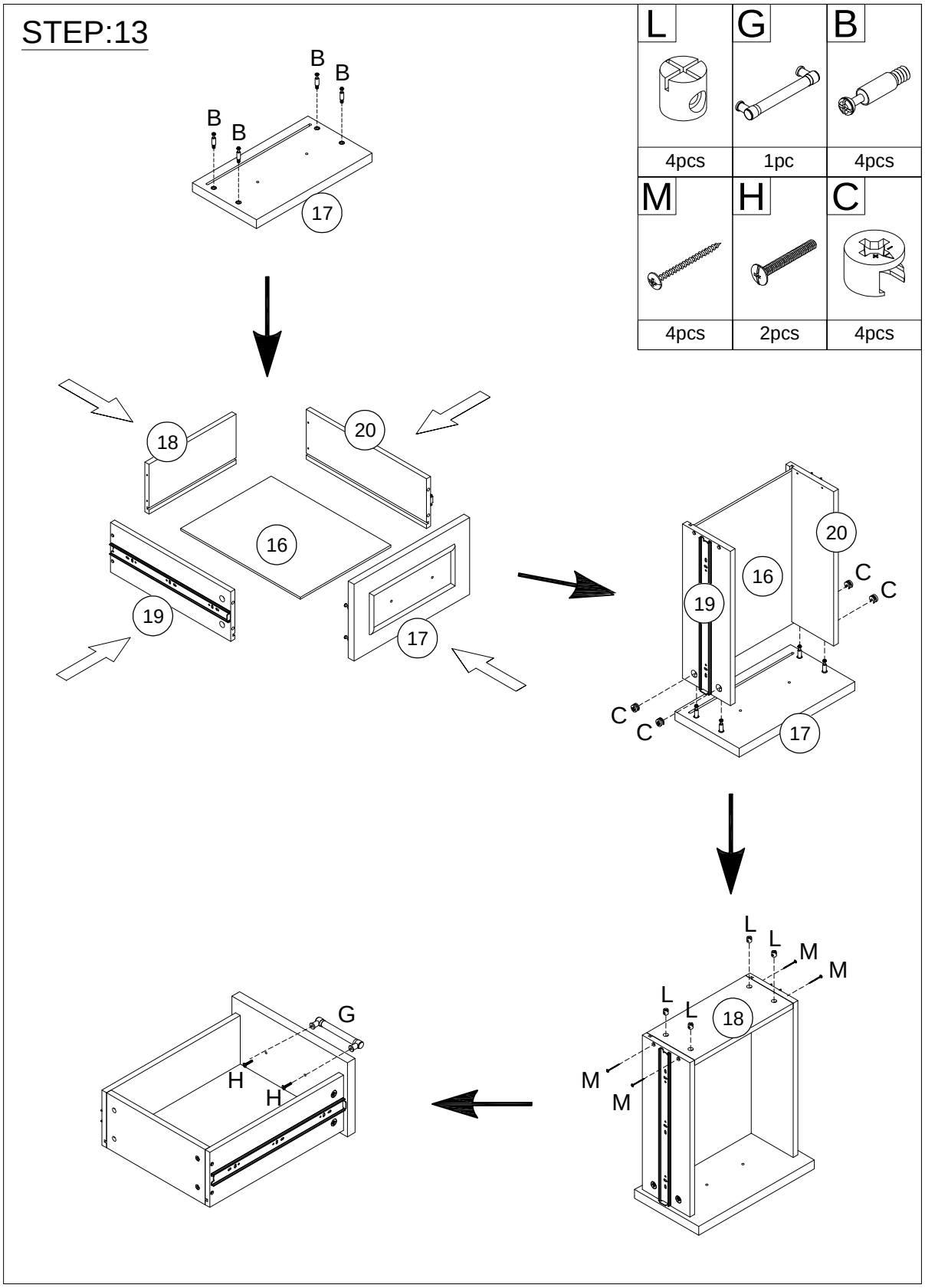
STEP:13
L
4pcs
G
1pc
B
4pcs
M
4pcs
H
2pcs
C
4pcs
B
B
B
B
17
18
20
16
19
17
20
16
19
C
C
C
C
17
L
L
M
M
L
L
18
M
M
G
H
H

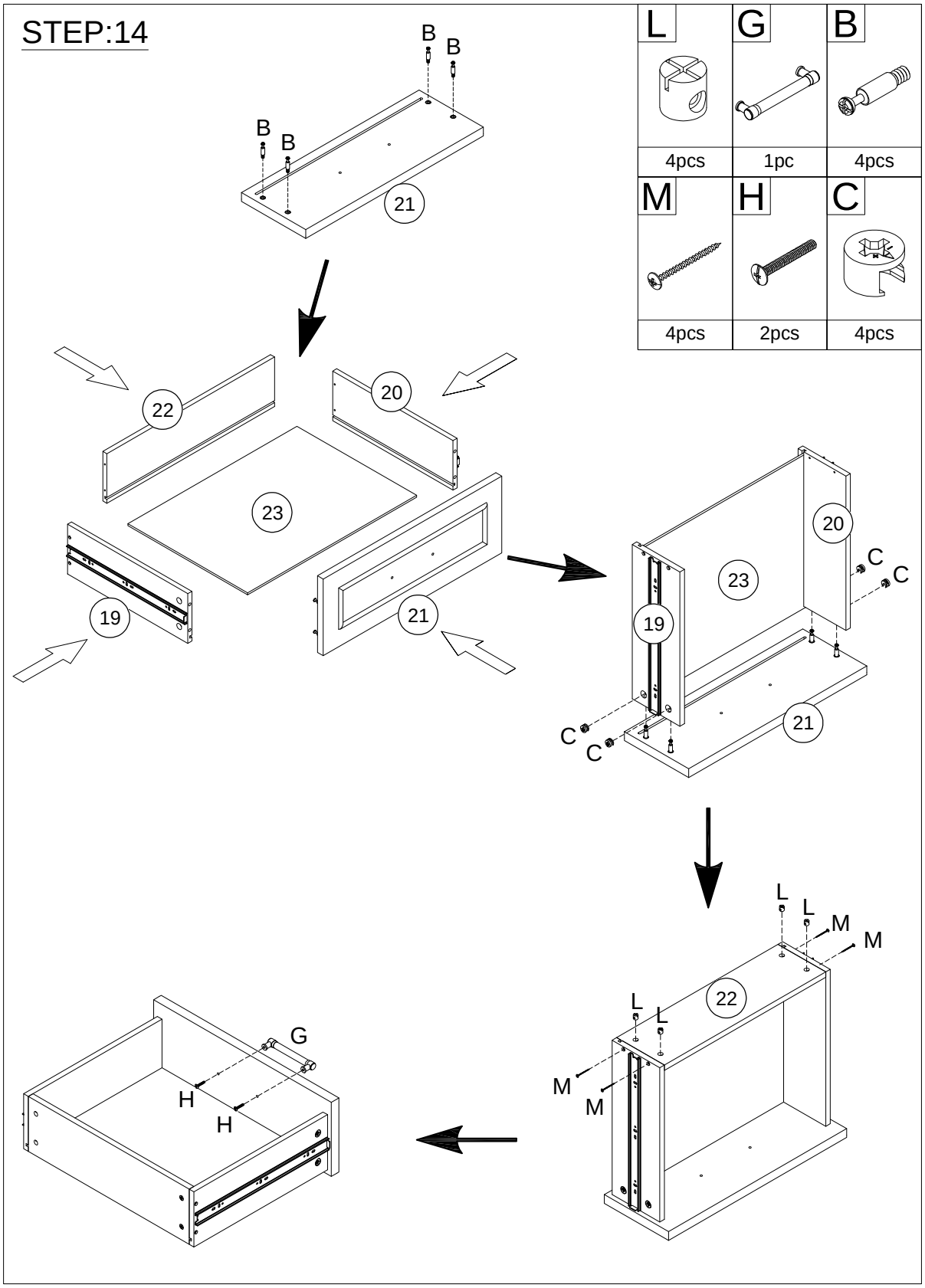
STEP:14
L
4pcs
G
1pc
B
4pcs
M
4pcs
H
2pcs
C
4pcs
B
B
B
B
21
22
20
23
19
21
20
23
C
C
19
C
C
21
L
L
M
M
22
L
L
M
M
G
H
H

## STEP:15

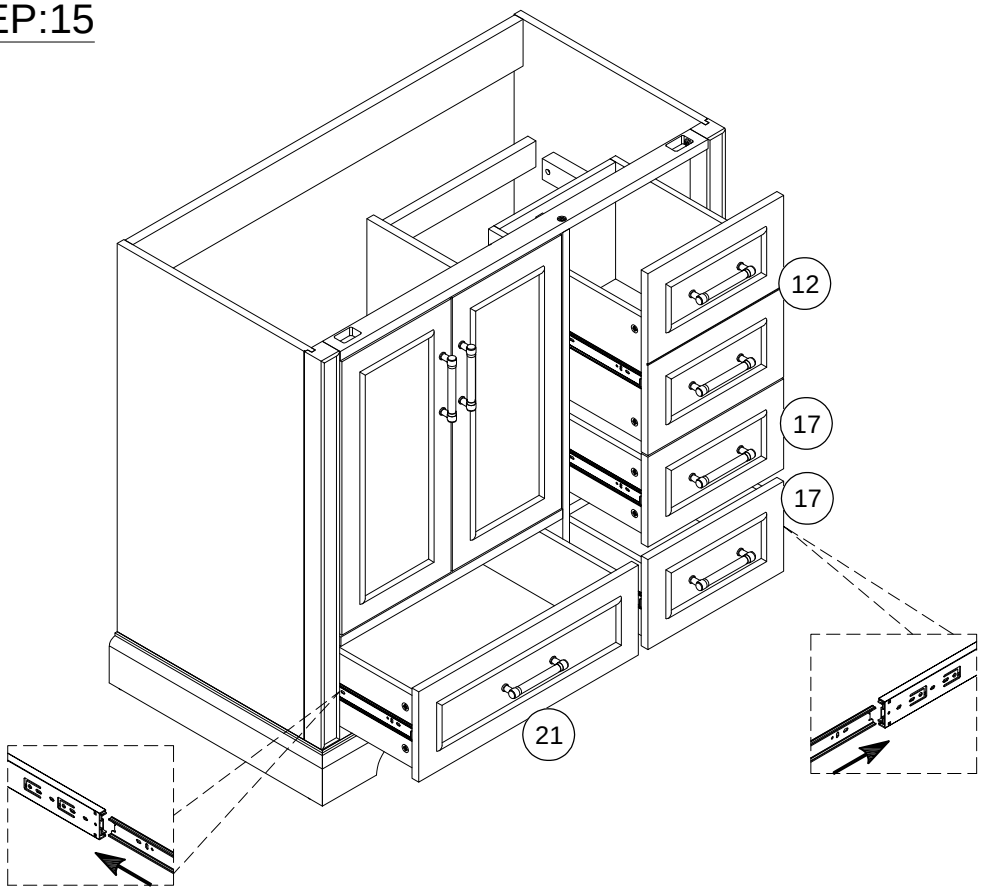


## STEP:16

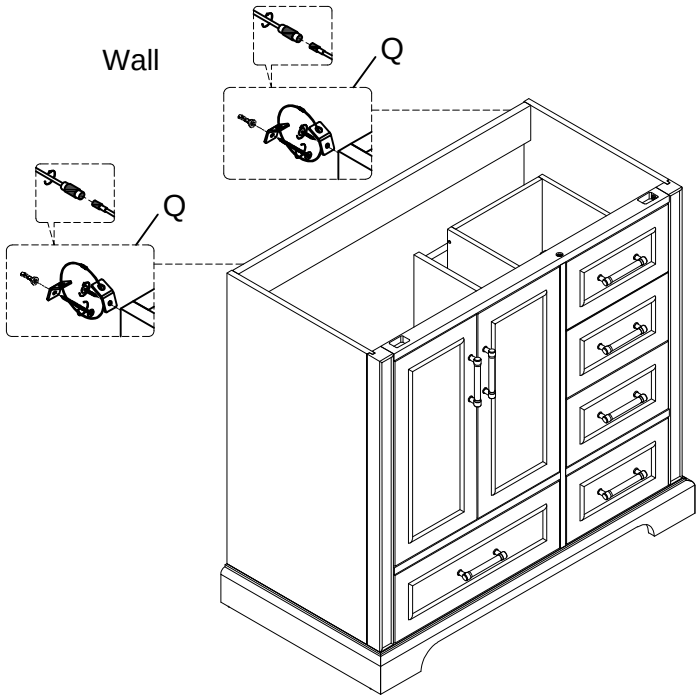


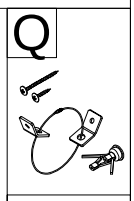


2 sets

## STEP:17

Install the sink on the cabinet with glue.
Let stand for 24 hours

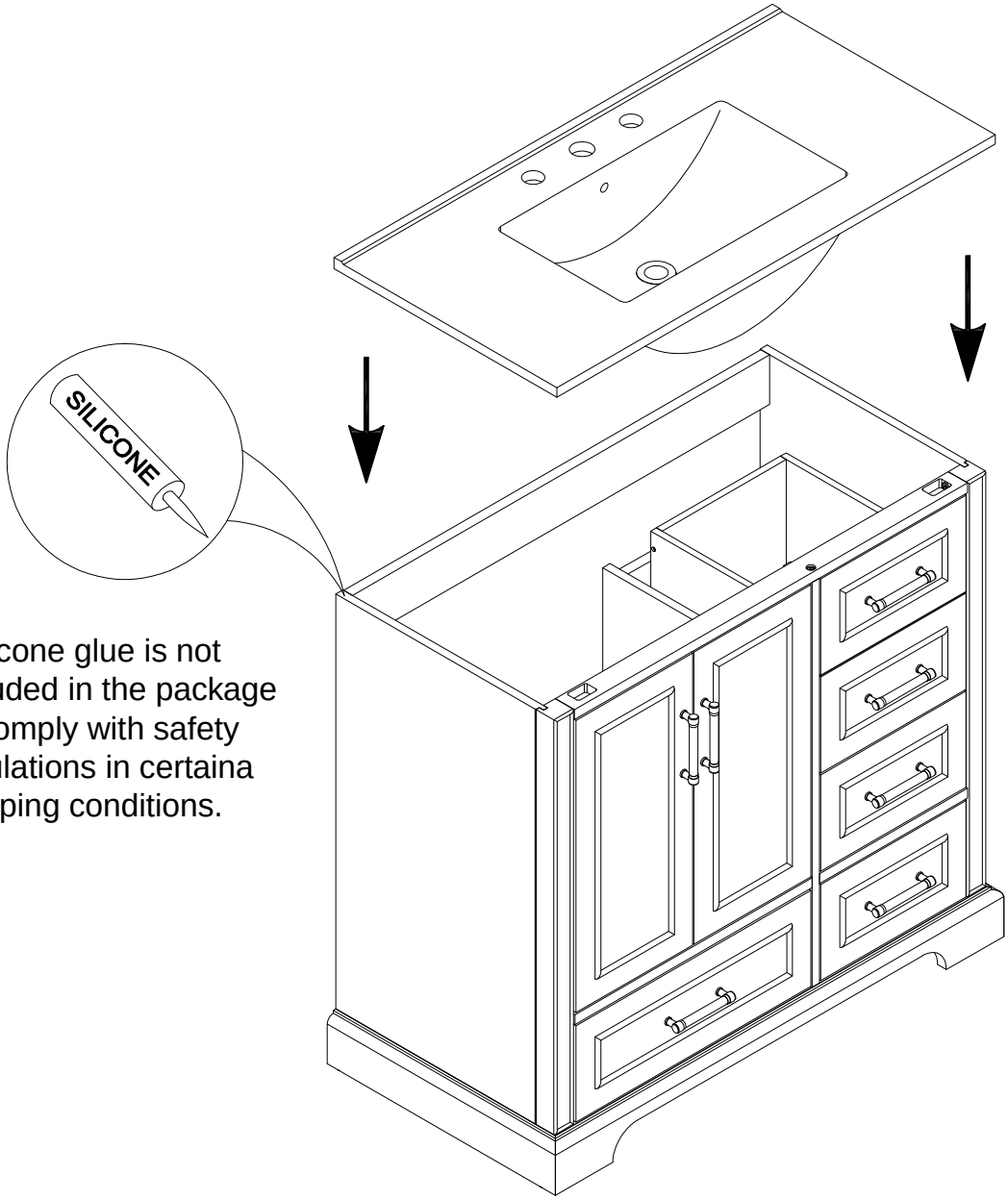


*Silicone glue is not included in the package to comply with safety regulations in certaina shipping conditions.

STEP:18

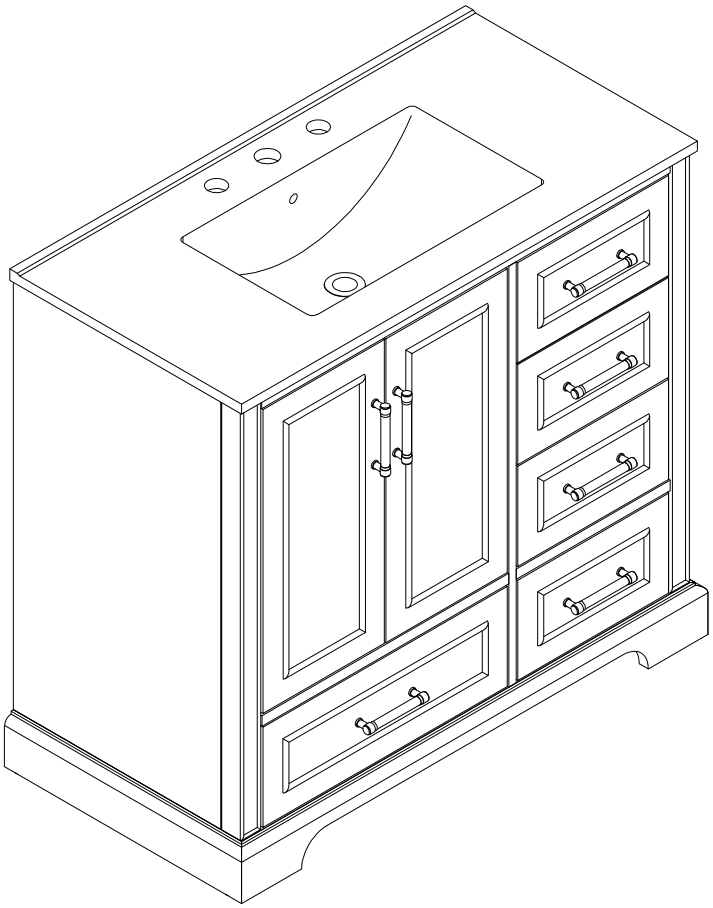

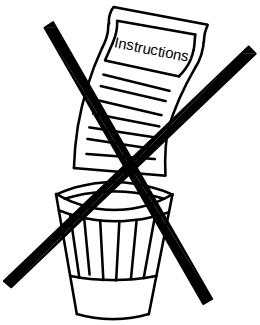

# HINGE ADJUSTMENTS

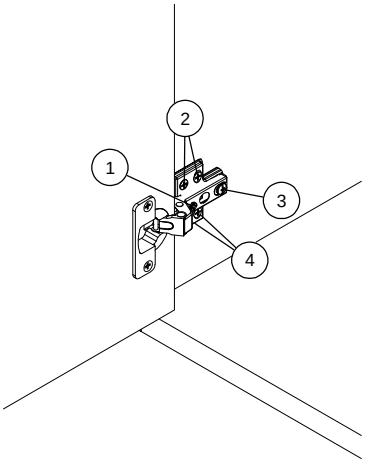


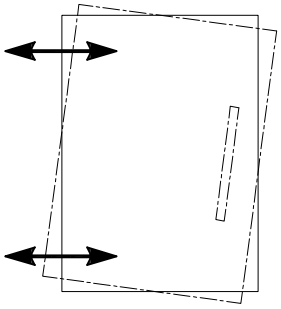

## (1) Sideways / Tilt adjustment

Turn the screw
**clockwise** to move the door further away from the side of the cabinet
**anticlockwise** to move the door closer to the side of the cabinet

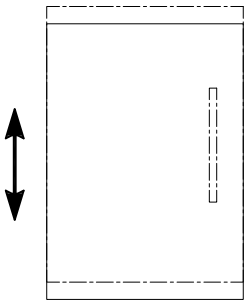

## (2) (4) Height adjustment

While supporting the weight of the door, turn the screws
**clockwise** to move the door up
**anticlockwise** to move the door down

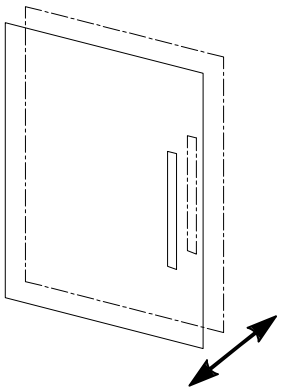

## (1) Forward and back adjustment