KS1280,1,2,3,5,6,7,8AX
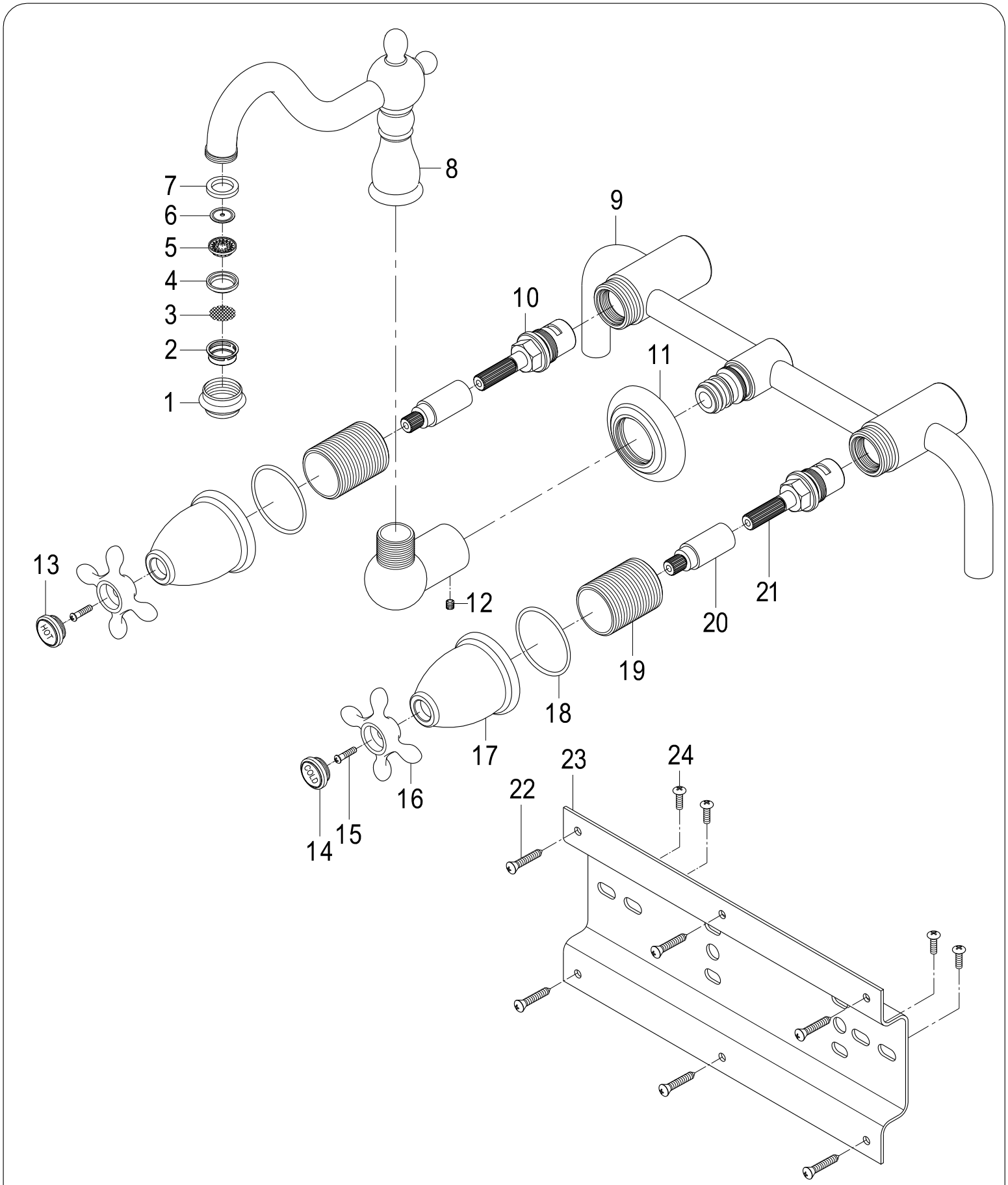
Twin Handles Wall Mount Vessel Sink Faucet