OAKHAM

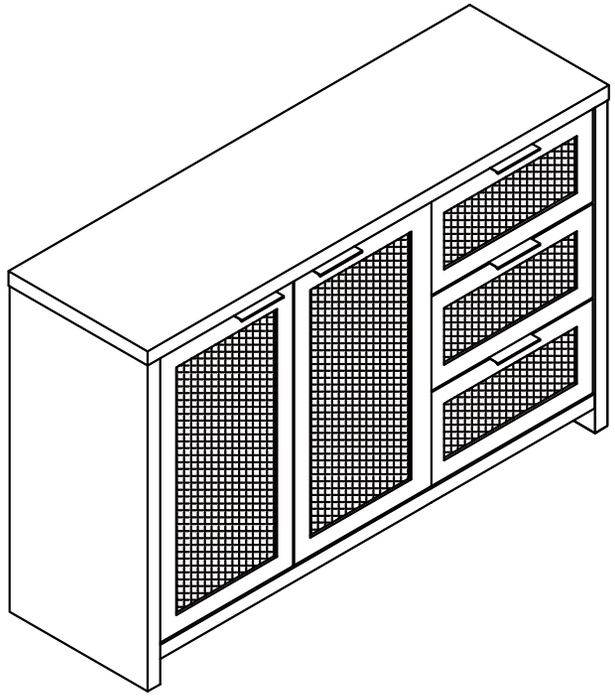

Video instructions can be found at:
https://oakhamdesign.com/pages/assembly-videos

Your satisfaction is our priority!

If for any reason there is anything missing, incorrect, or different from your expectation, please contact us first at

care@oakhamdesign.com

Parts list

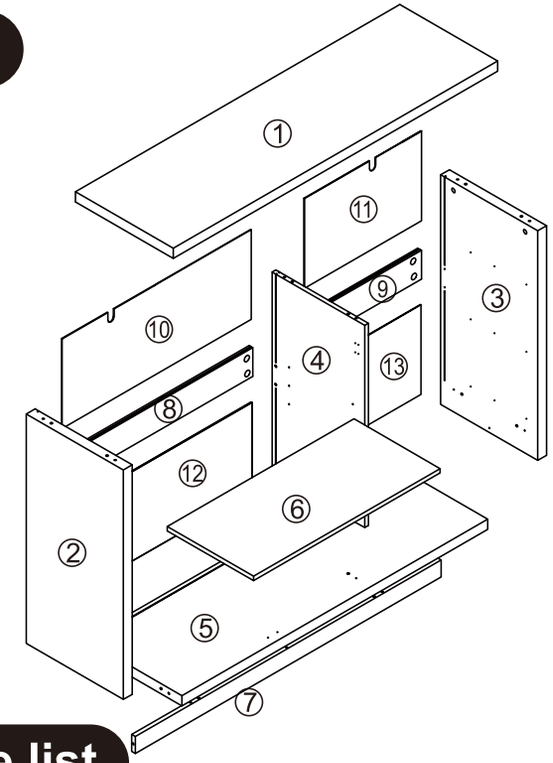

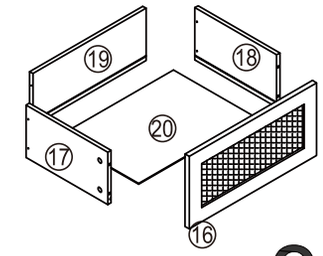

x 3

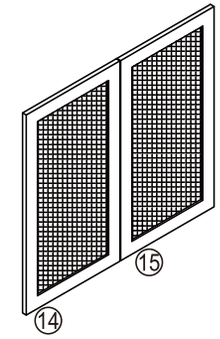

Hardware list

A x35	B x35	C x14 ϕ8*30MM	D x14 M4*35	E x50 M3*12	F x5
G x12	H x16 M3*16	I x2	J x2 M4*14	K x2	L x4
M x2 M4*50	N x2 ϕ26	O x24 M3.5*14	P x2 ϕ26	Q x2	R x4
S x35	DR x3	DL x3	CR x3	CL x3	

Step 1

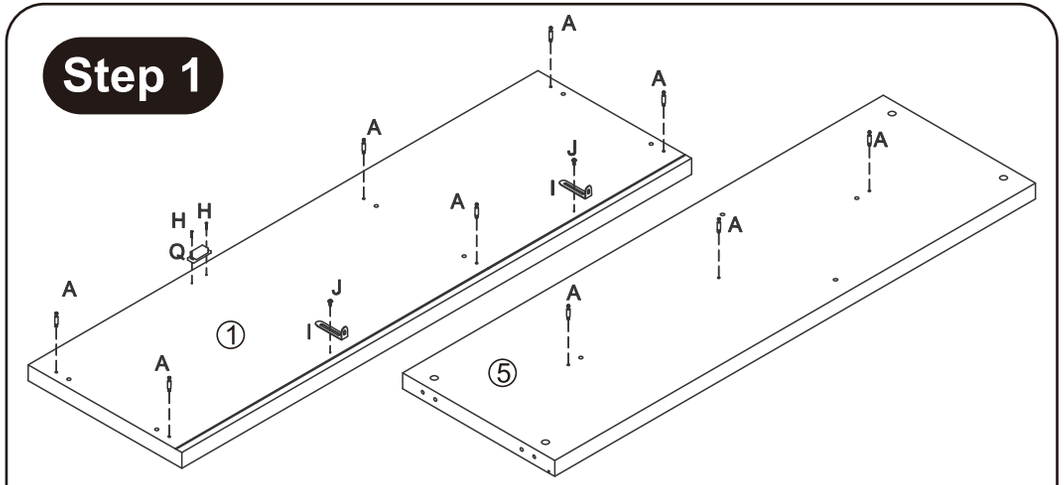

A	Q	H	I	J
x9	x1	x2	x2	x2

Step 2

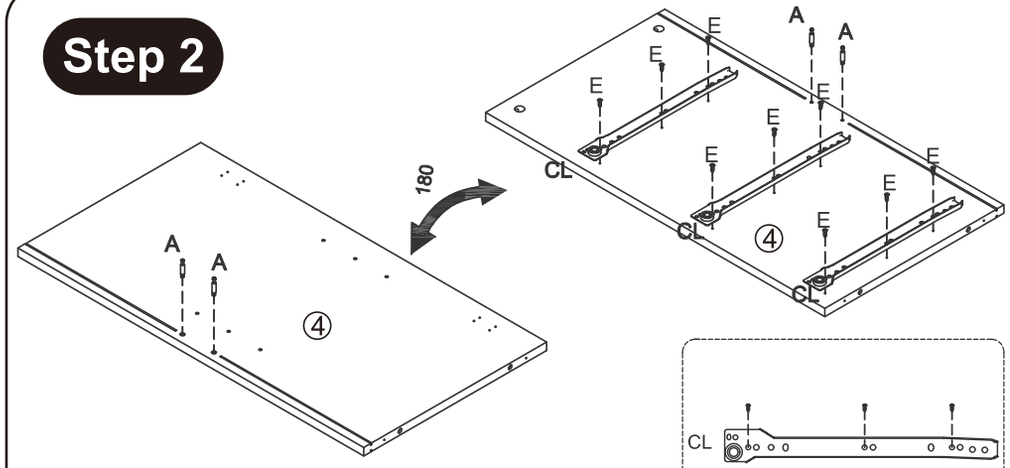

A	E	CL
x4	x9	x3

Step 3

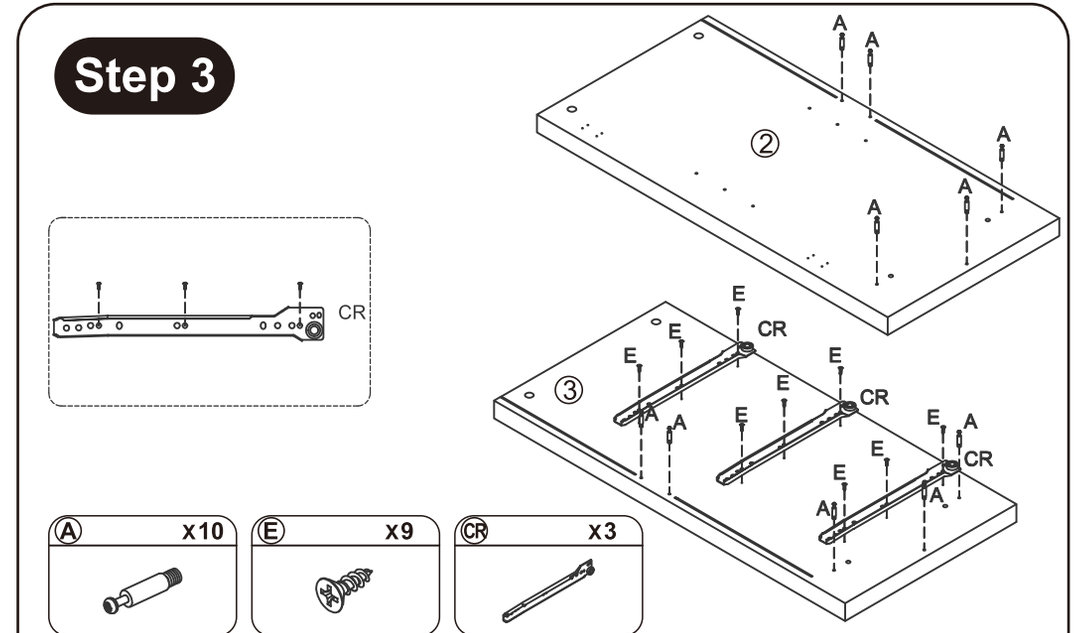

A	E	CR
x10	x9	x3

Step 4

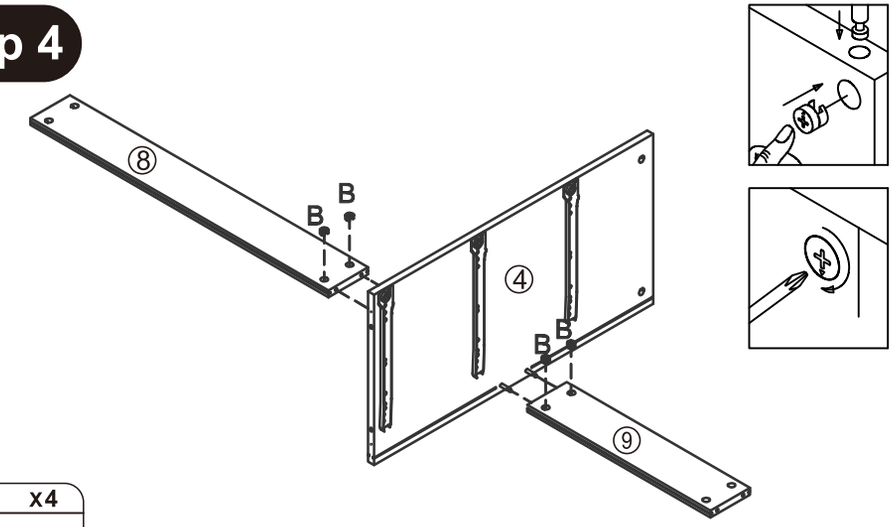

B
x4

Step 5

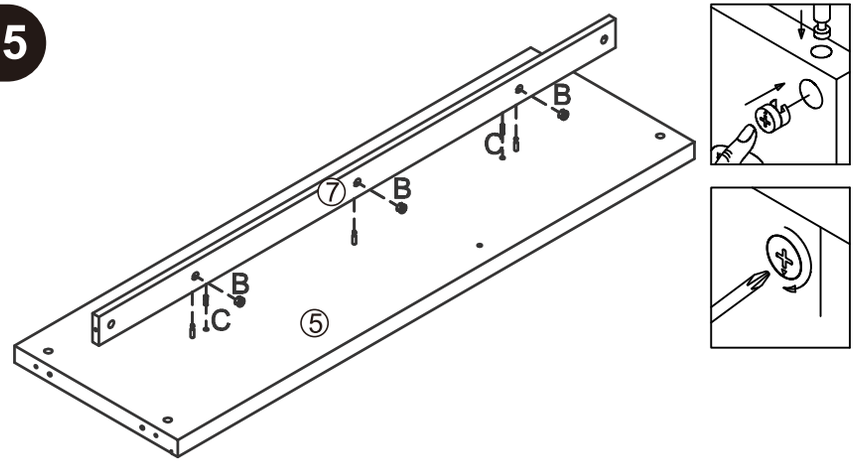

Ⓑ	x3

Ⓒ	x2

Step 7

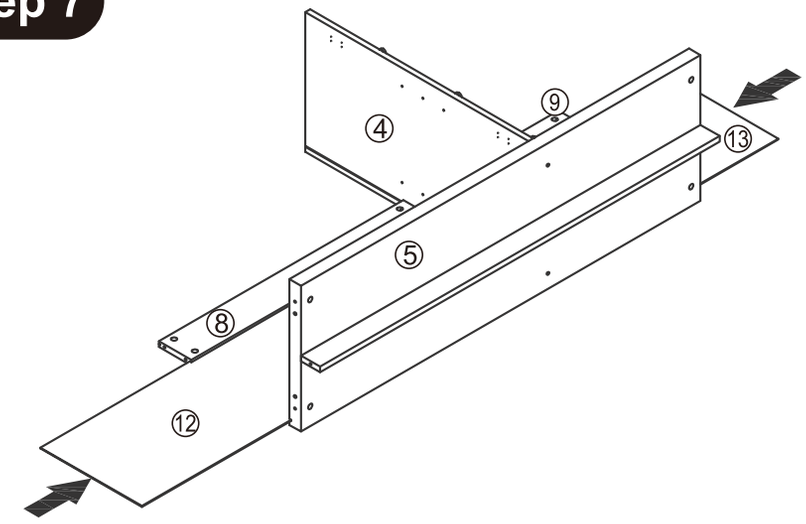

Step 6

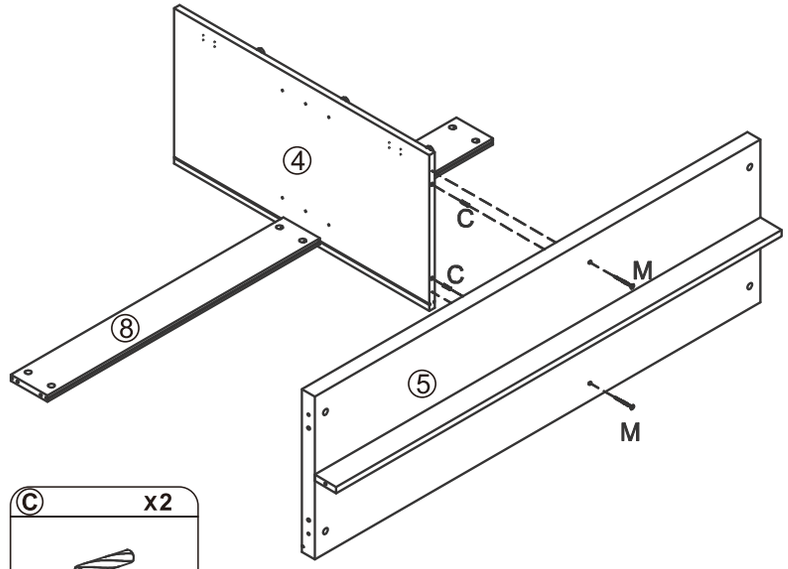

Ⓜ	x2

Ⓒ	x2

Step 8

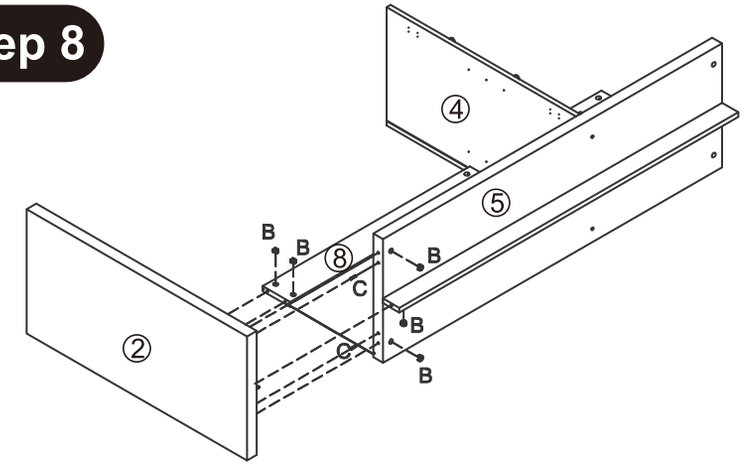

Ⓑ	x5

Ⓒ	x2

Step 9

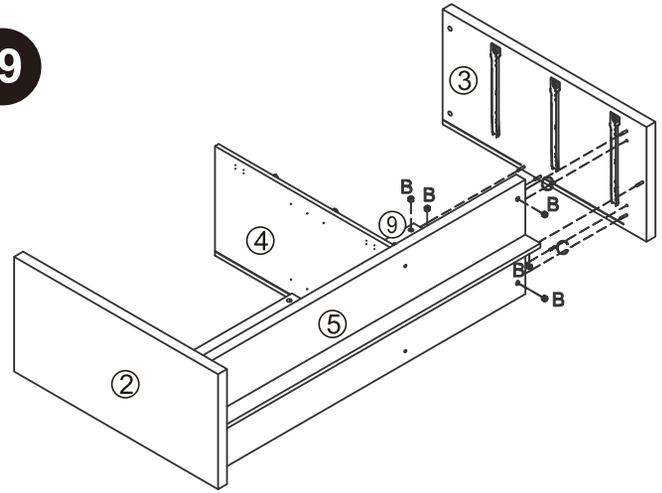

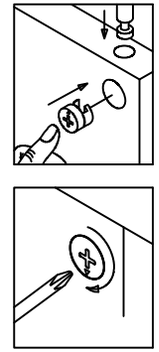

Ⓑ x5



Ⓒ x2



Step 10

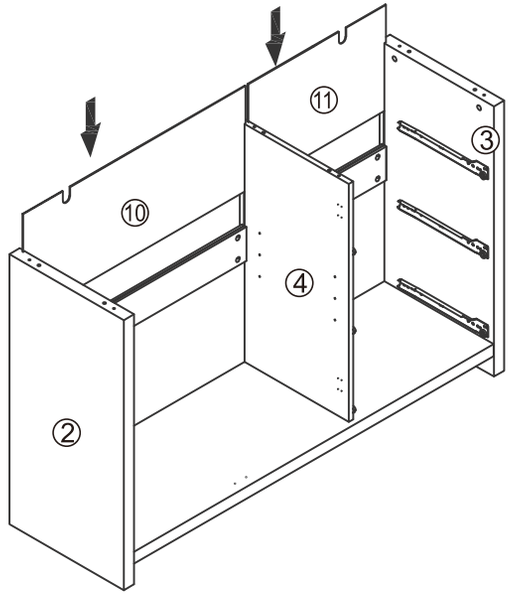

Step 11

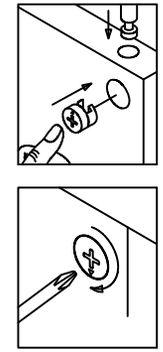

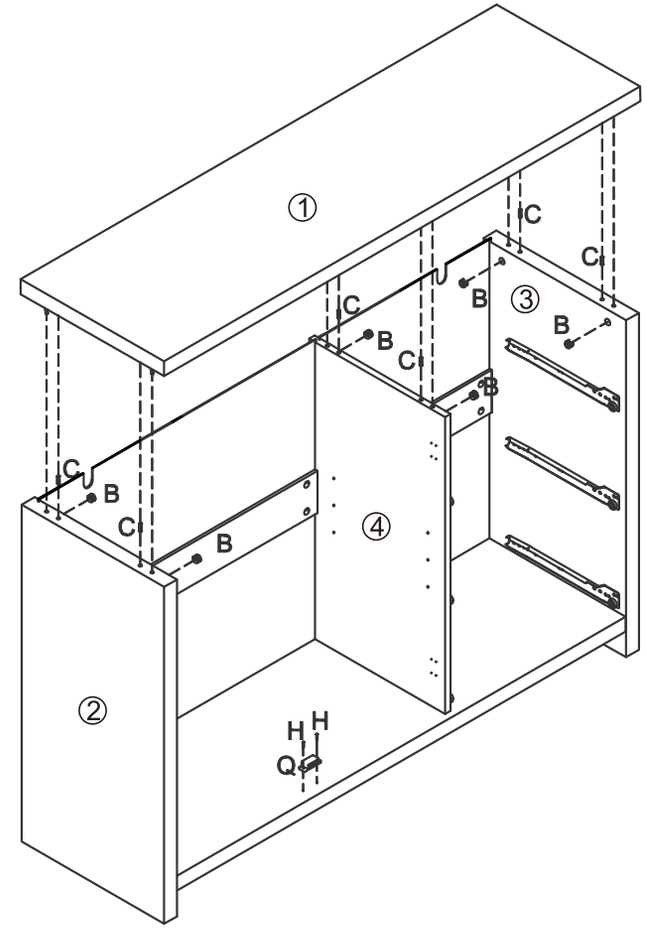

Ⓑ x6



Ⓒ x6



Ⓠ x1



Ⓗ x2



Step 12

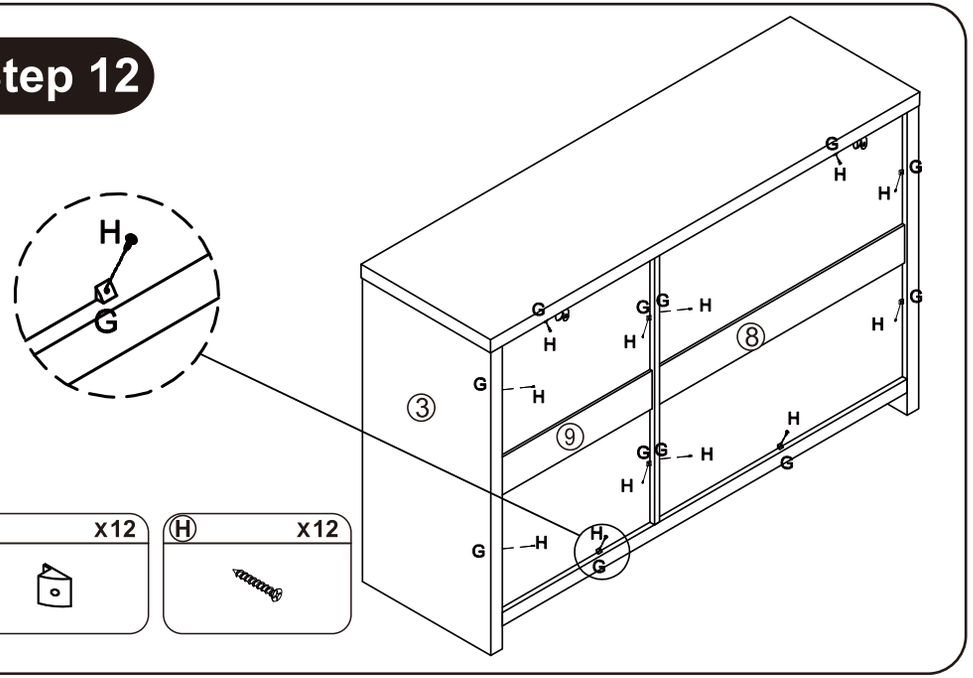

Step 14

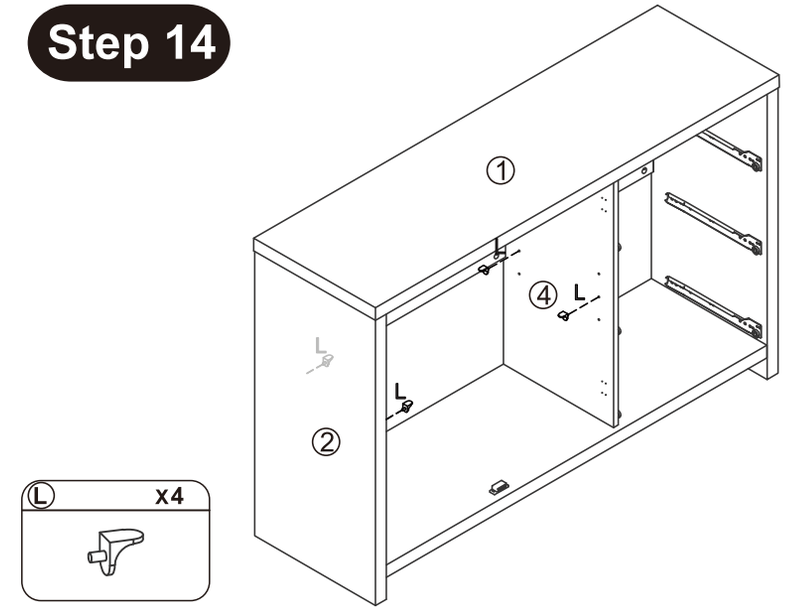

Step 13

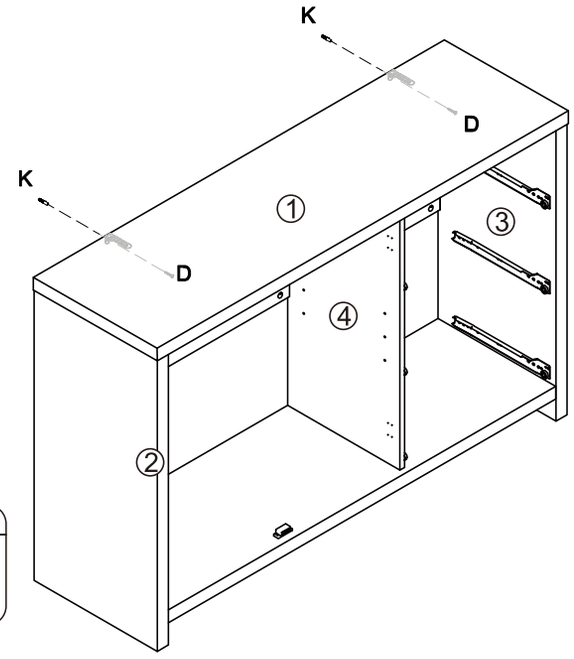

Step 15

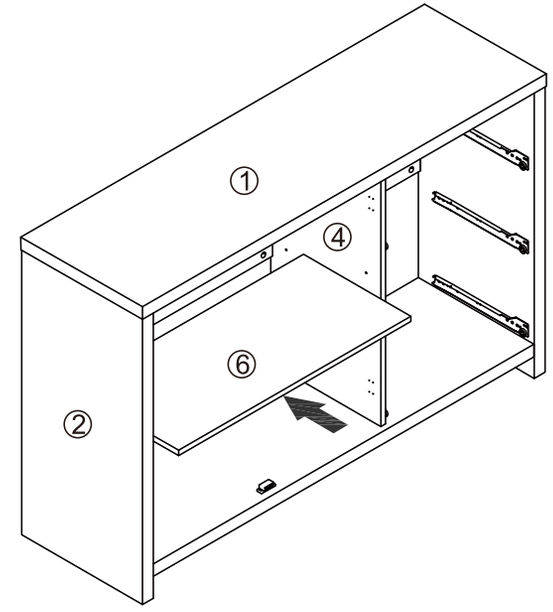

Step 16

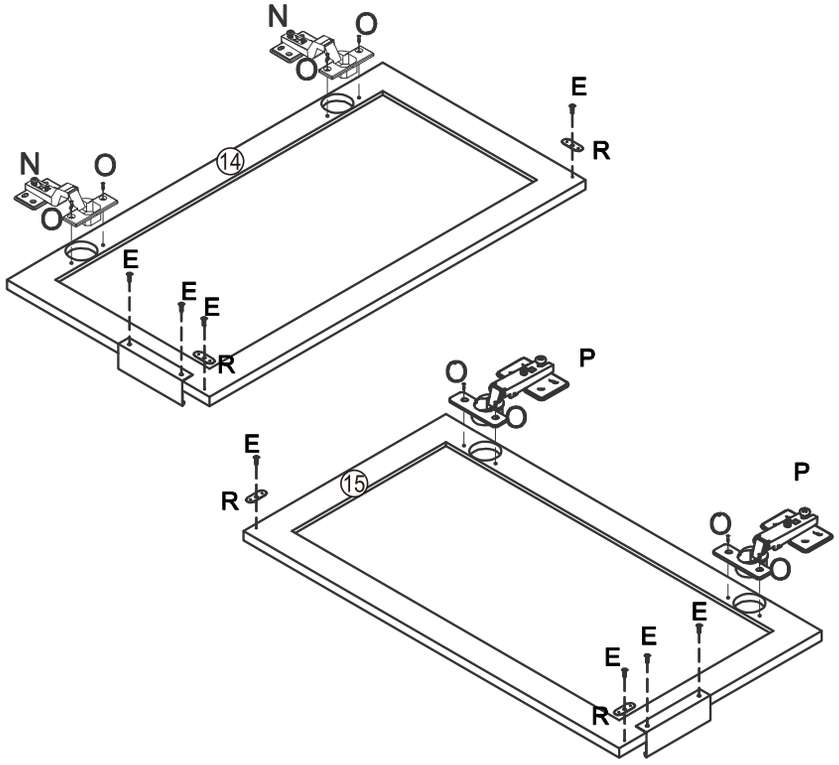

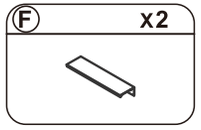

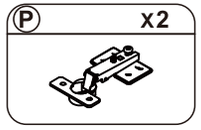

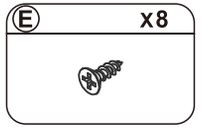

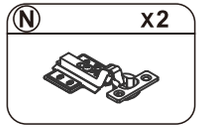

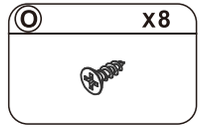

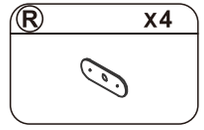

Step 17

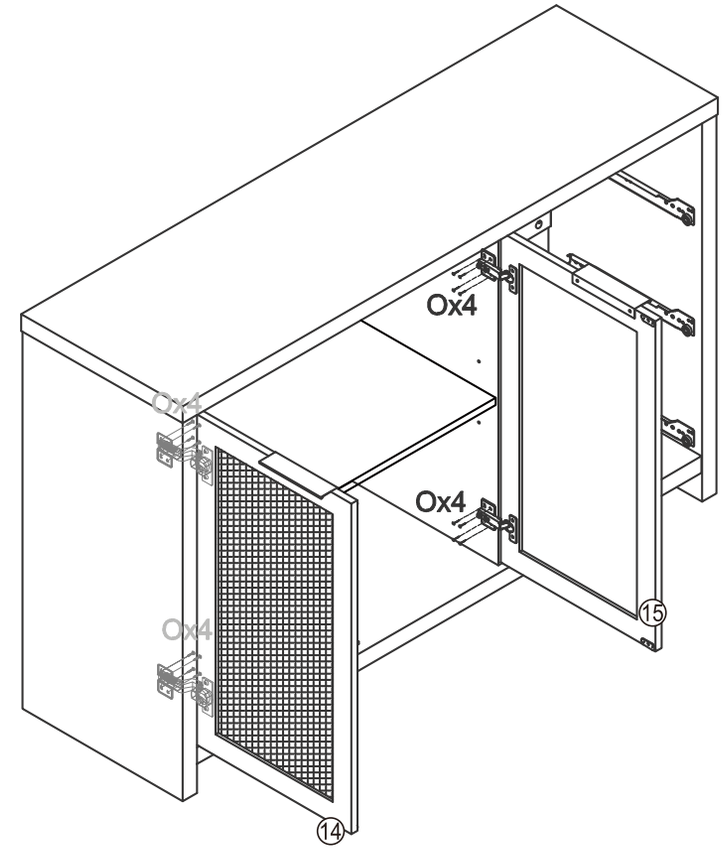

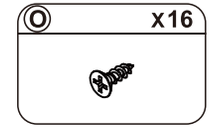

Step 18

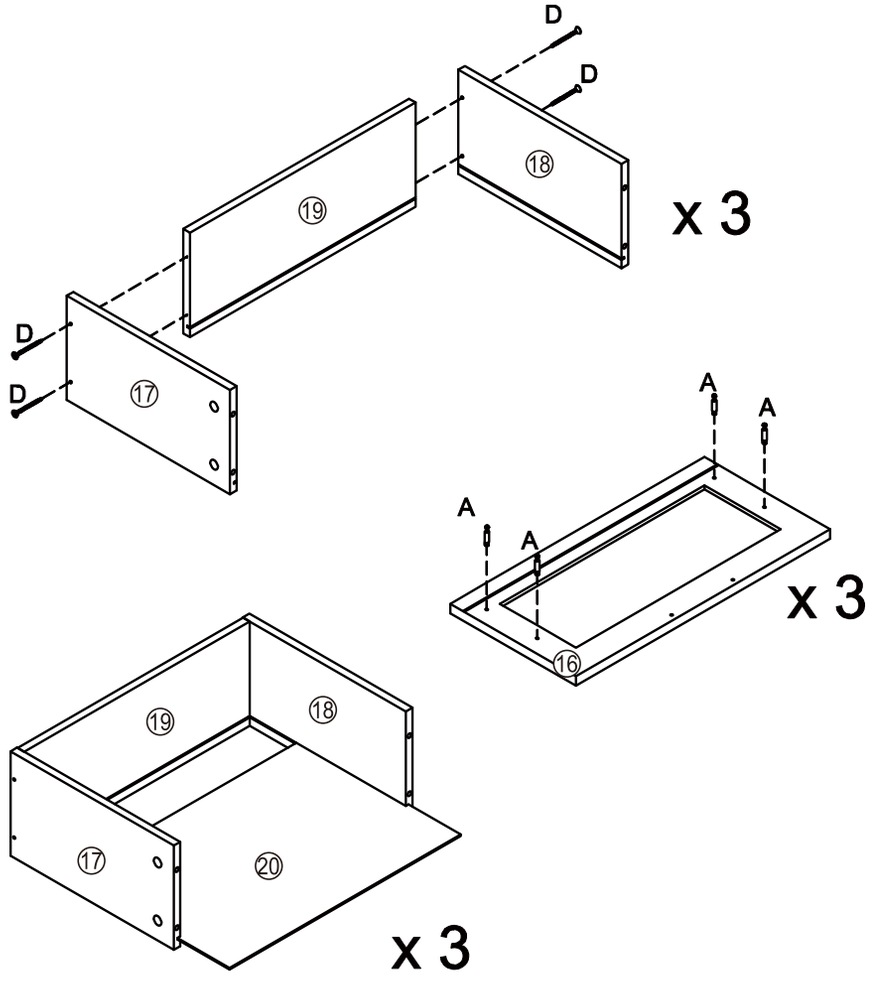

Ⓐ x12	Ⓓ x12
	

Step 19

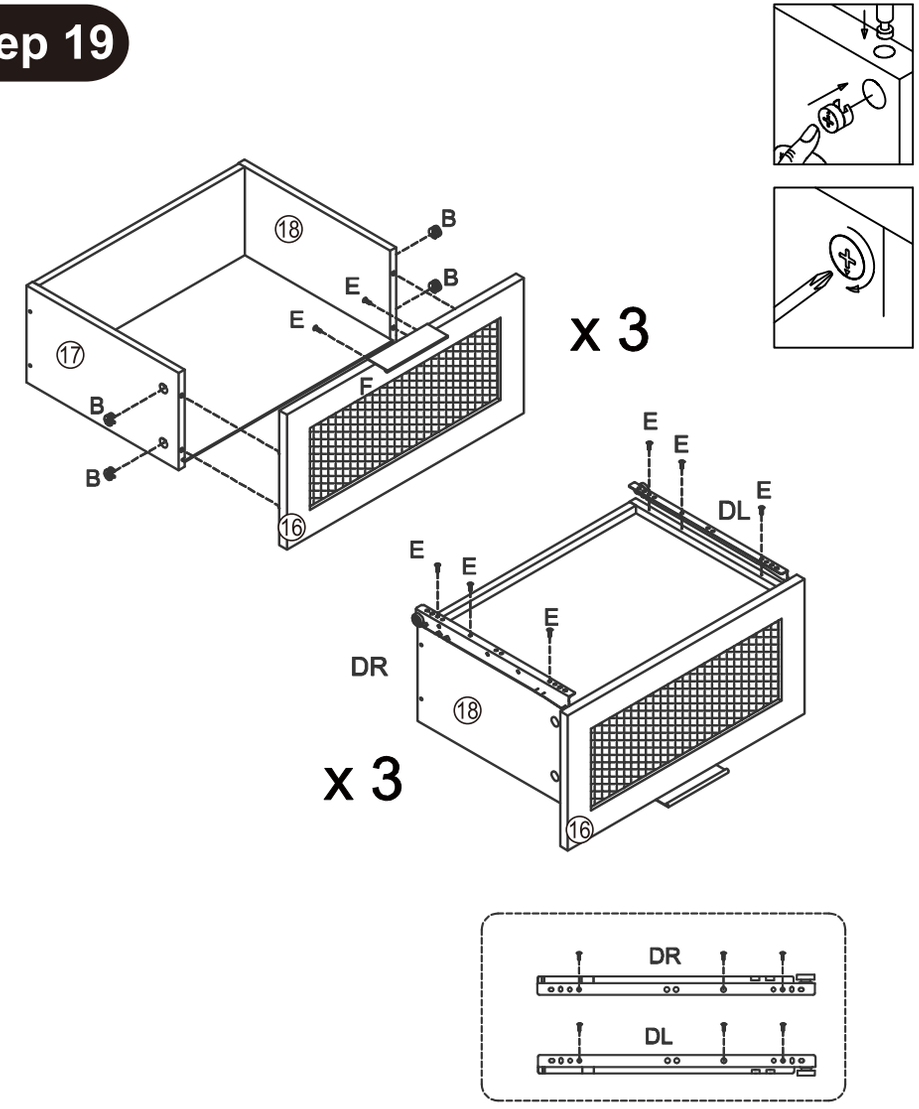

Ⓔ x24	Ⓕ x3	Ⓑ x12	DR x3	DL x3
				

Step 20

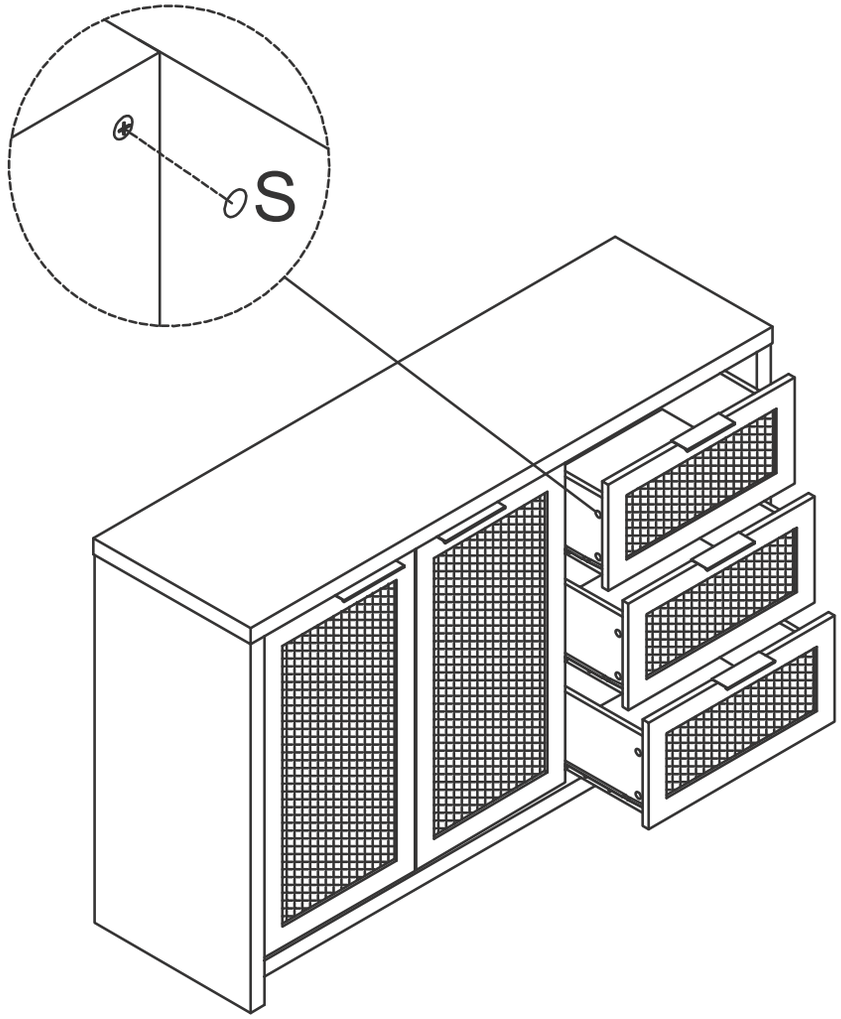

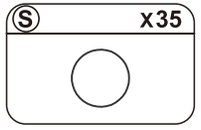

Step 21

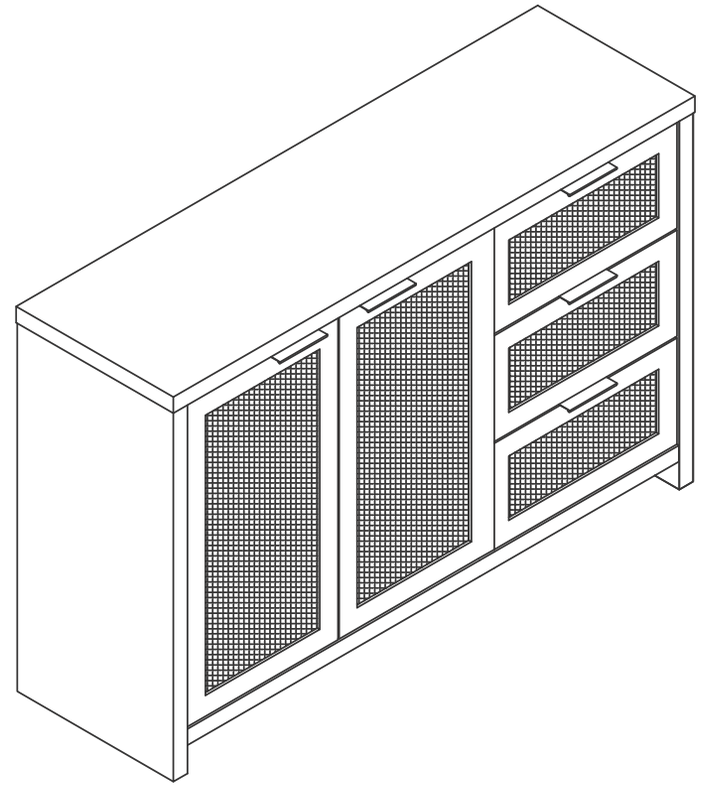

Adjusting the door

- Before adjusting the hinge, please check whether the cabinet is skewed.
- If the skew can not be repaired, please remove the anti-tipping device first, then adjust the cabinet to vertical position.
- Please adjust the hinge with the door open.
- Please operate it with more than 2 people, one person holds the door and the other one adjusts the screw.
- Have trouble adjusting the door? Please check out our video on adjusting the door via our website or contact care@oakhamdesign.com !

Components Name

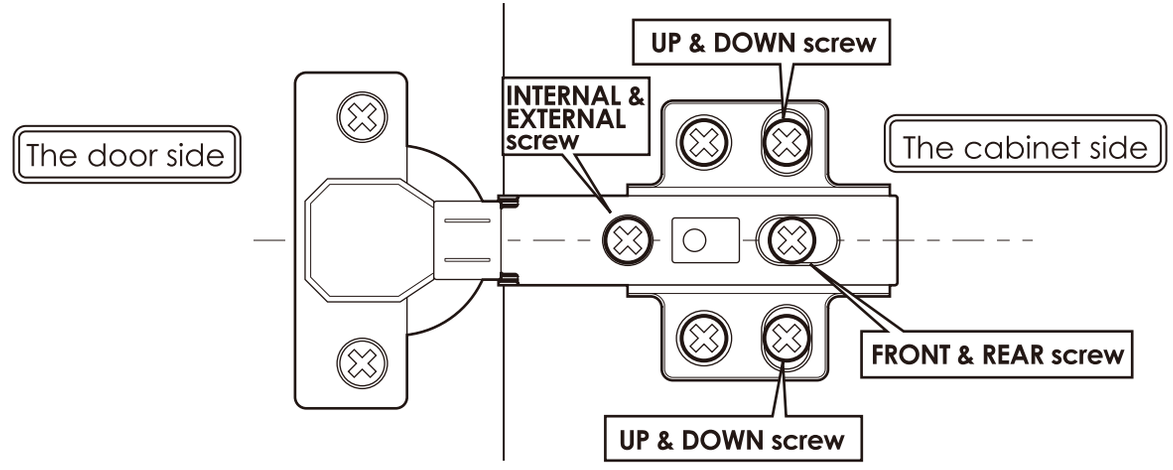

Obvious gaps between doors or Doors don't look closed

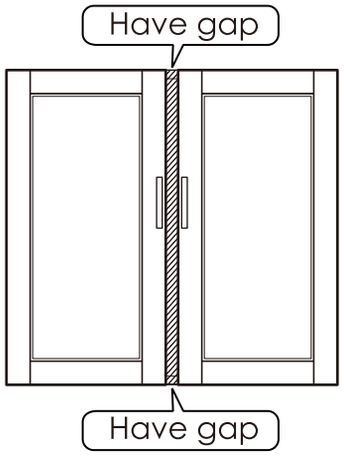

1 Turn "internal & external screw" to the right can make the door approach inside.
Please adjust the doors little by little.

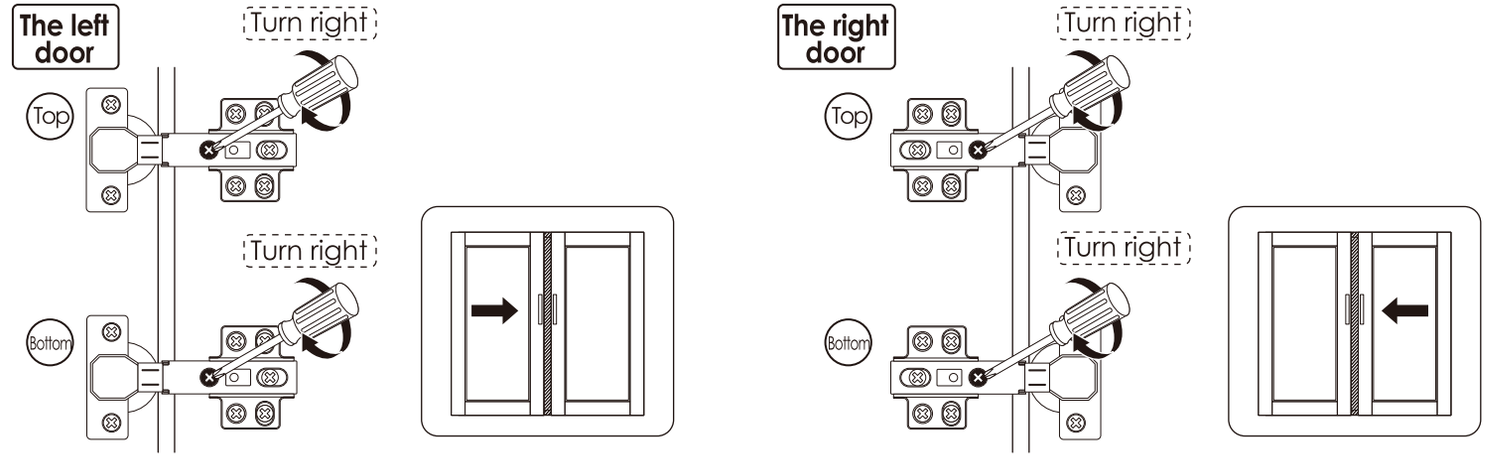

※ **If the 2 doors are overlap, please turn the "internal & external screw" to the left.**

When door is crooked



Please take the following steps to adjust first.

1 Rotate the "front and rear screws" to the left

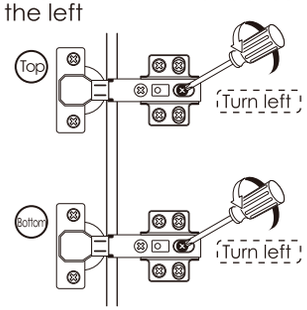

※ **After adjusting the "front and rear screw", the door still does not change, please turn the "internal & external screw" to the right Slightly.**

2 Push the door to the cabinet

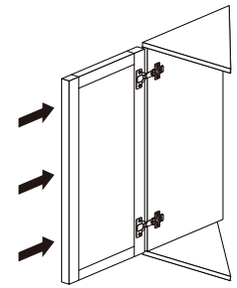

3 Rotate the "front and rear screws" to the right

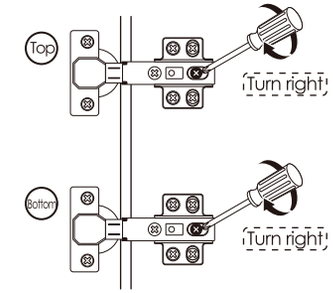

When door is leaning

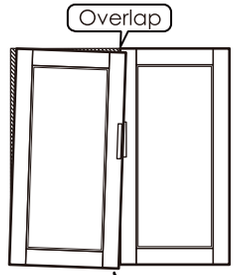

1 Turn "internal & external screw" to the left can make the top of the door tilted outward.

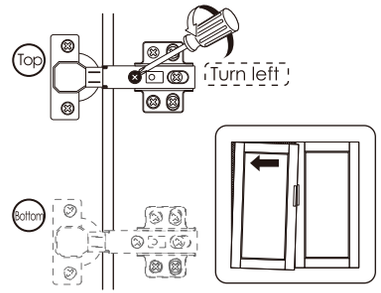

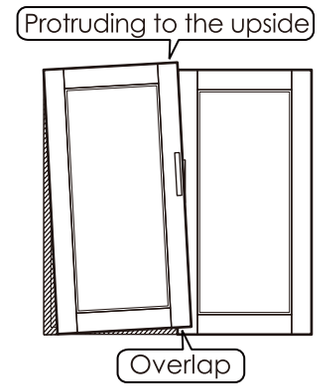

1 Turn "internal & external screw" to the left can make the bottom of the door tilted outward.

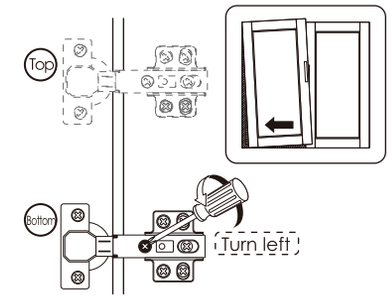

When the door is higher on top

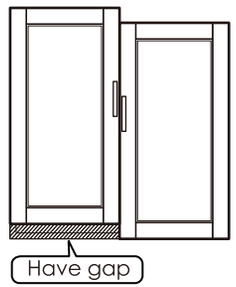

1 Turn "up & down screw" to the left

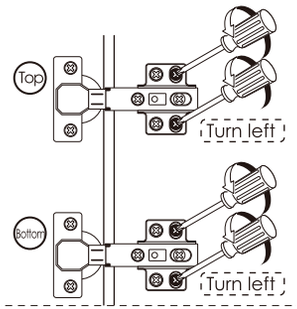

2 Lower the door's height so that 2 doors are of the same height.

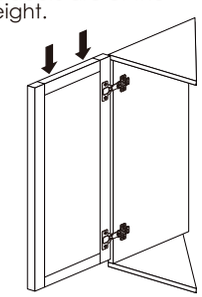

3 Turn "up & down screw" to the right

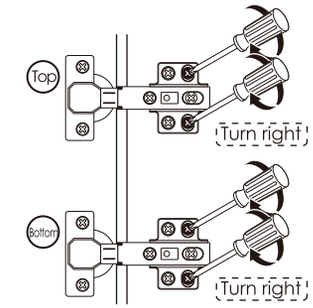

※ If the door is lower on bottom, please lift up the left door slightly on step 2

※ **Stay Scratch-Free: Safeguard Your Furniture by Assembling on Carpet.**

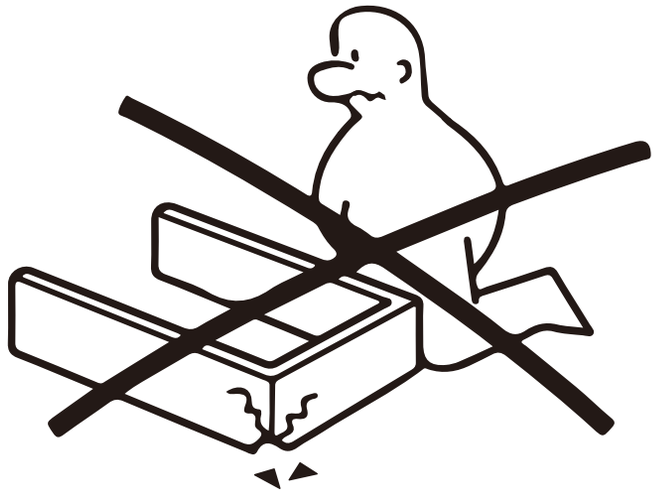

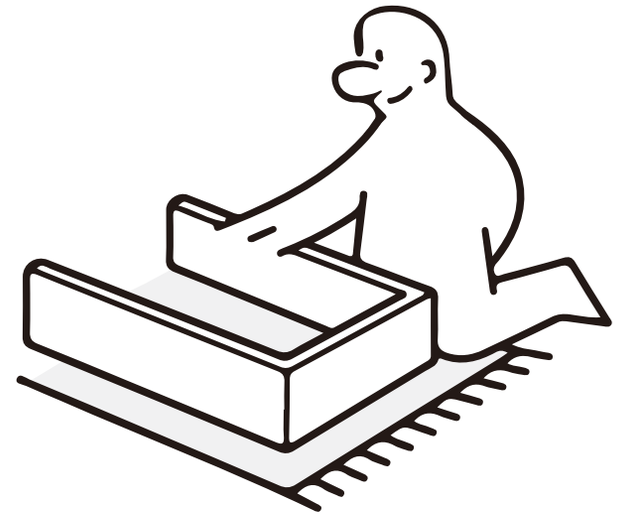

※ **Stuck in Assembly Limbo? Check out our website or contactour support team for quick solutions!**

