ASSEMBLY INSTRUCTION

CHAIR

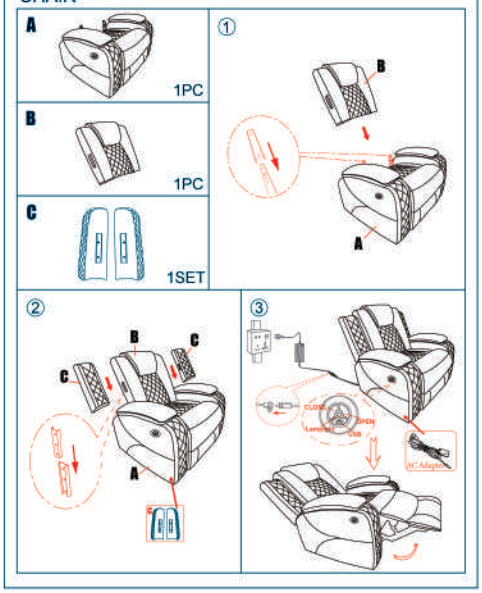

ASSEMBLY INSTRUCTION

LOVESEAT

LOCATION OF LOVESEAT CONSOLE:
CHECK BEHIND
LOWER BACK OF THE LOVESEAT
OPEN FLAP TO FIND A ZIPPER COMPARTMENT.

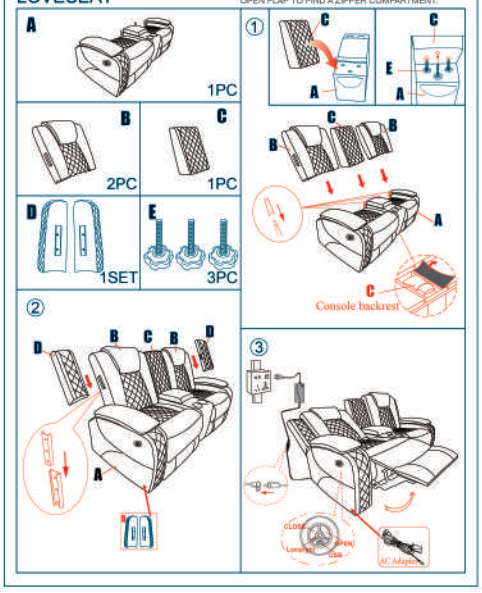

ASSEMBLY INSTRUCTION
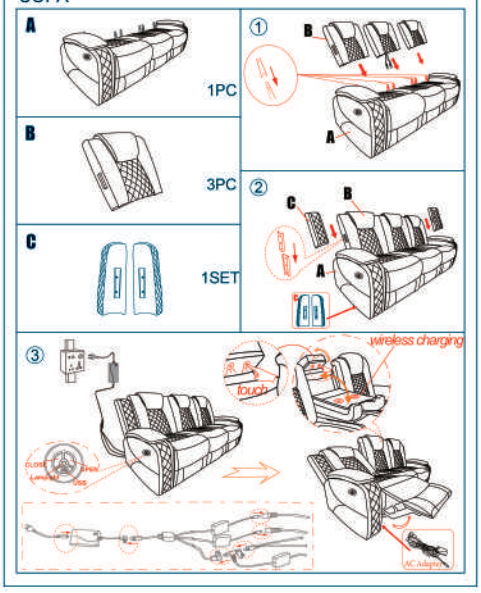
SOFA