Assemble Instruction

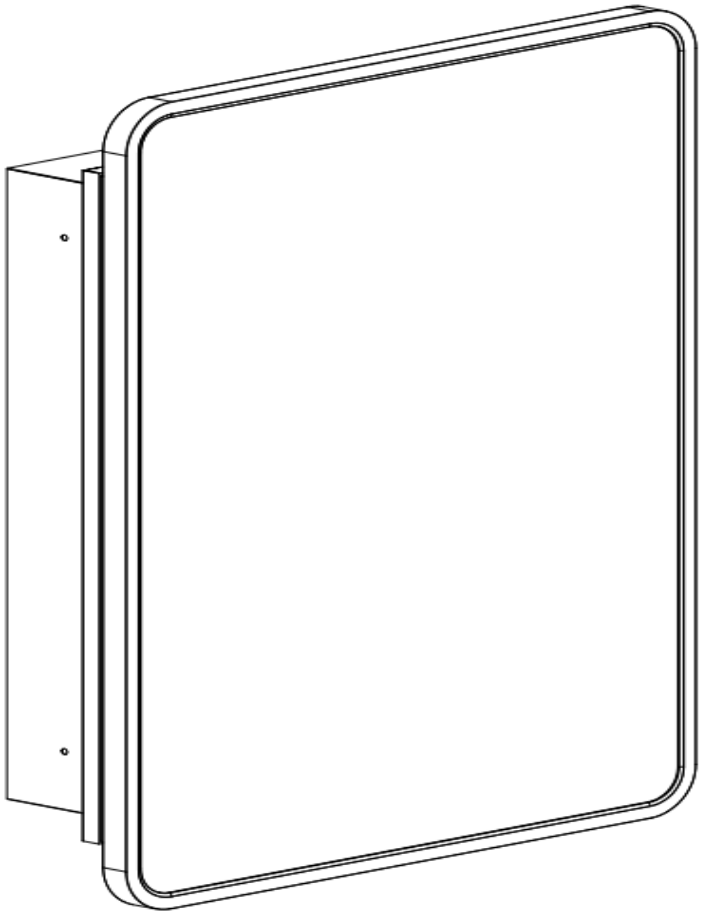

Medicine Cabinet

BPS1418R

List of Parts:

1. Medicine Cabinet X1

2. Shelf X2

3. Wall Anchor X4

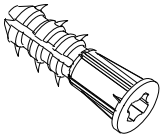

4. Mountin Screw X4

Tools Needed:

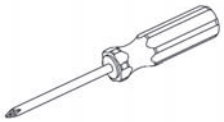

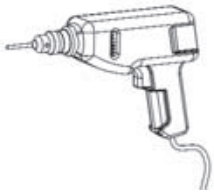

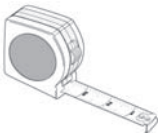

Rough Wall Opening

Overall Size	**Cabinet** Size	Rough Wall Opening
14 in.(W) X 18 in.(H) X 5 in.(D)	13-4/5 in.(W) X 14-1/5 in. (H) X 3-9/10in. (D)	12-3/5 in.(W) X 13 in. (H) X 3-1/2 in. (D)

Use a 1/4 in. (6 mm) drill bit for drywall anchor installation. Use a 1/8 in. (3mm)drill bit for direct stud installation.

NOTE: If installing into a material other than drywall or into stud, consult a professional for proper installation.

INSTRUCTIONS FOR RECESS-MOUNT INSTALLATIONS

INSTALLATION of CABINET

1. Carefully remove all packing material. Place shelves and hardware aside until needed.

2. Determine desired location of cabinet on wall. Mark wall to show wall opening size. Generally, the recommended height to the center of the cabinet is 64" from the floor. Fig. 1

Fig. 1

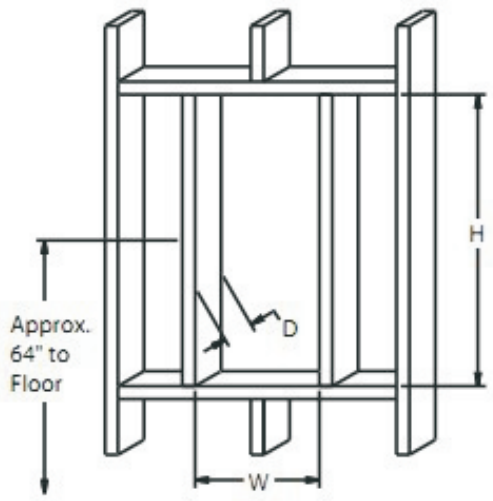

3. CAUTION: Wall studs, plumbing or electrical lines that interfere must be removed or relocated. Cut wall opening, being careful not to damage the surrounding wall surface. Insert framing to support all plaster board edges

4. Insert cabinet into wall opening in plumb and centered position. Use a carpenter's level and shim corners of cabinet if necessary.

5. Once cabinet is inserted into wall, measure down 4" from the top and the bottom of the cabinet. Center tihe measurement on the sides of the cabinet. Fig 2.

Fig. 2

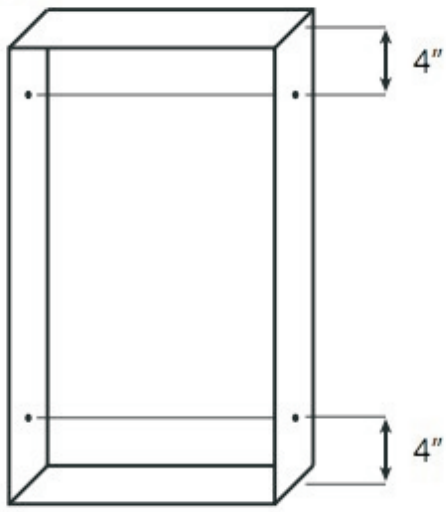

6. Using a drill bit, drill a total of 4 pilot holes in the locations determined
in Step 5. Secure to wall studs through the 4 mounting holes inside cabinet (screws provided)