Toddler Toy Storage Cabinet w/ Side Vertical Mirror

Bolocon

Retain the instructions for future ref.

ASSEMBLY INSTRUCTIONS

ITEM #NC251201

HARDWARE

A.Lockingbolt×12PCS
Have been pre-installed on parts.



6*40mm

B.Hex Screw× 24 PCS



7*45mm

B.Allen Wrench×1PCS



PARTS LIST

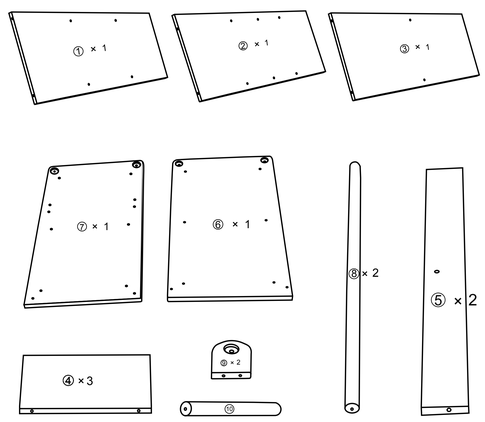

STEP1: As shown in the diagram below, pay attention to the placement of parts below and attach them according to the diagram.

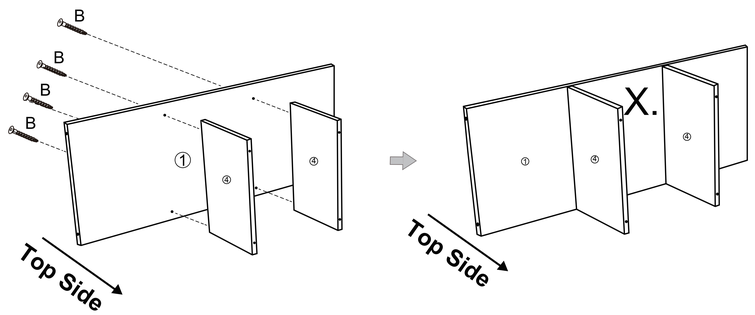

Place it on the flat floor as shown above, and use 4 Hex Screws B to attach parts 1 and 4.

STEP2: As shown in the diagram below, pay attention to the placement of parts below and attach them according to the diagram.

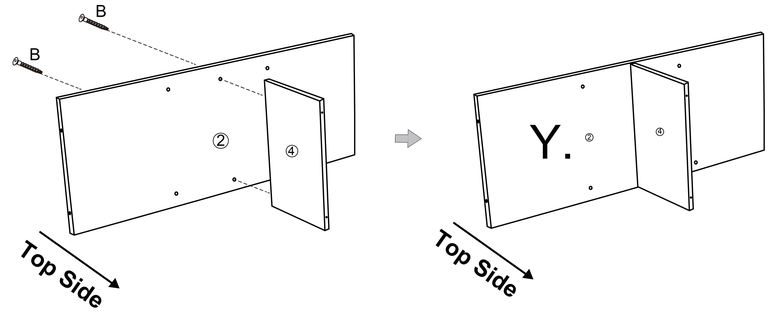

Place it on the flat floor as shown above, and use 2 Hex Screws B to attach parts 2 and 4.

STEP3: As shown in the diagram below, pay attention to the placement of components X and Y below and attach them according to the diagram.

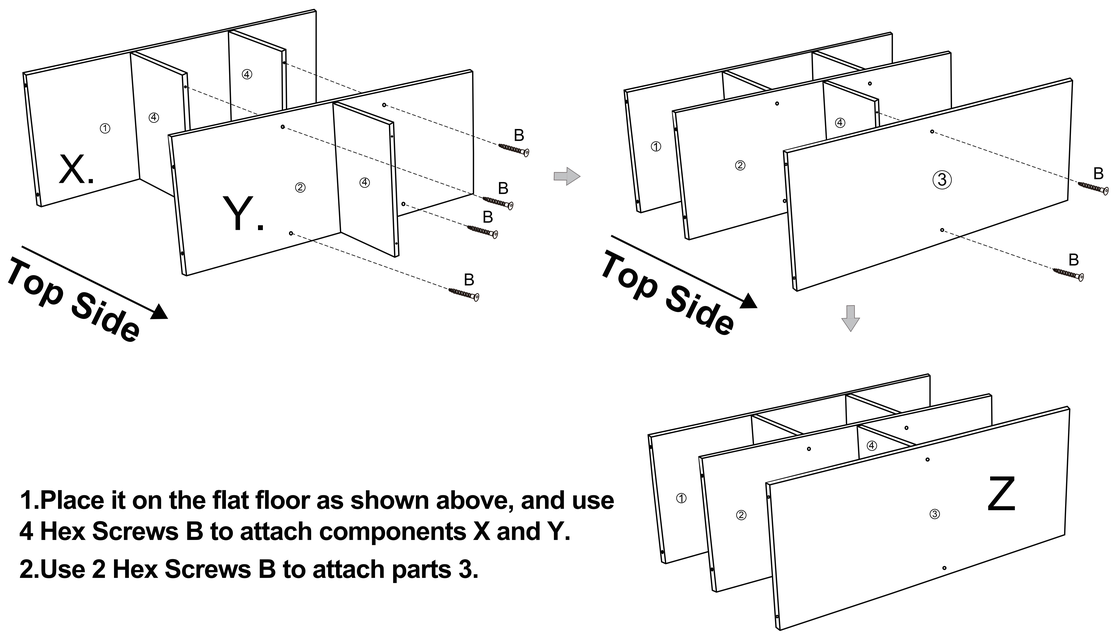

1.Place it on the flat floor as shown above, and use 4 Hex Screws B to attach components X and Y.

2.Use 2 Hex Screws B to attach parts 3.

STEP4: As shown in the diagram below, pay attention to the placement of component Z below and attach them according to the diagram.

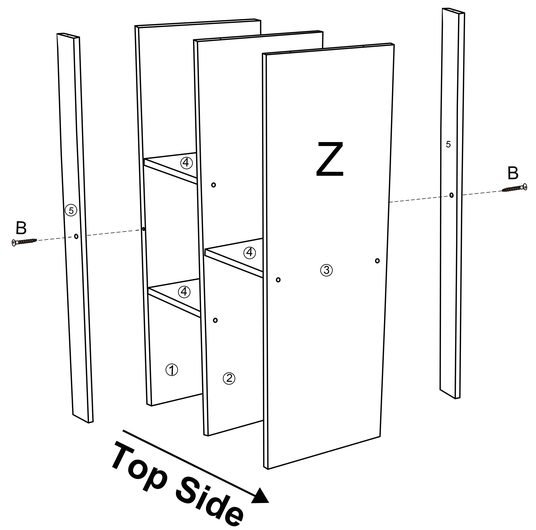

Place it on the flat floor as shown above, and use 2 Hex Screws B to attach parts 5 and component Z.

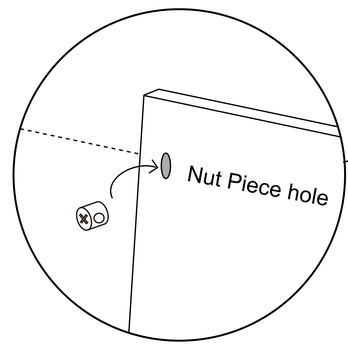

How to use locking bolt A.?

1.Put nut piece into side hole first.
2.Insert the screw and fix with nut.
3.Tighten with a wrench.

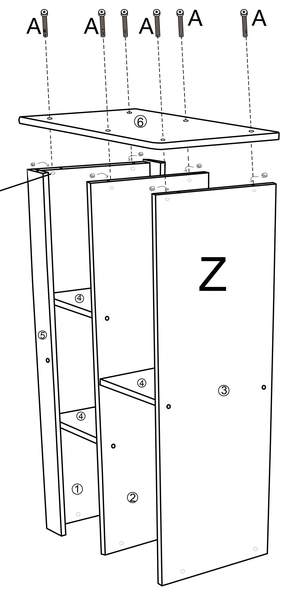

Place it on the flat floor as shown above, and use 6 locking bolt A. to attach parts 6 and component Z.

CAUTION:

Adult assembly required.
Hardware contains small screws with sharp points.Keep unassembled parts.

MAINTENANCE:

-Placing on flat and level surface while using.
-Ensure the produt continue to function properly and safely by regularly checking the hardware and tightening when necessary.

⚠ WARNING:

Choking Hazard： Small parts
Not for children under 3 years and put it to somewhere children can’t reach.
Appropriate age grade: 36 Months+

Toddler Toy Storage Cabinet w/ Side Vertical Mirror

ASSEMBLY INSTRUCTIONS

Retain the instructions for future ref.

ITEM #NC251201

STEP5: As shown in the diagram below, pay attention to the placement of parts below and attach them according to the diagram.

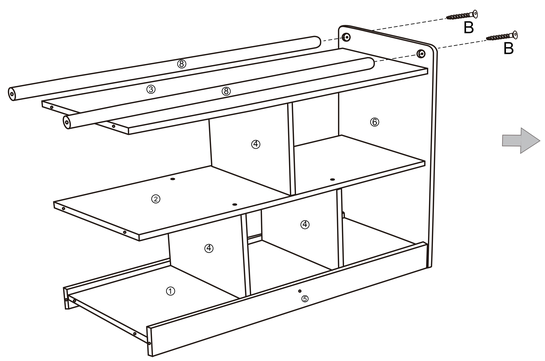

Use 2 Hex Screws B to attach parts 8.

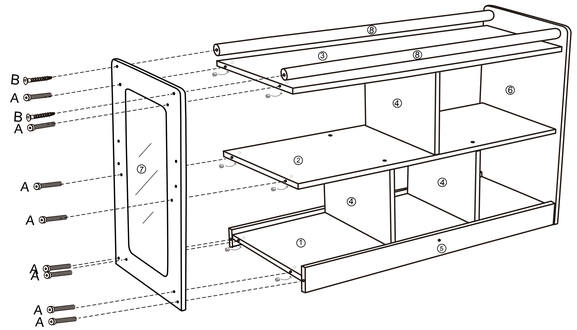

Use 2 Hex Screws B and 8 Lockingbolts A to attach parts 7.

STEP6: As shown in the figure below, assemble the pull up rod and support, and then connect them to the side of cabinet.

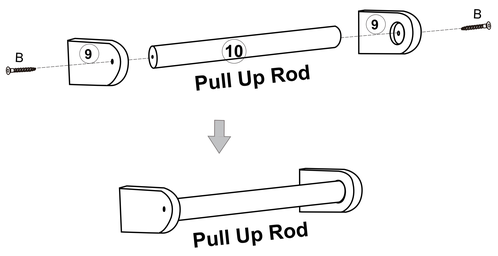

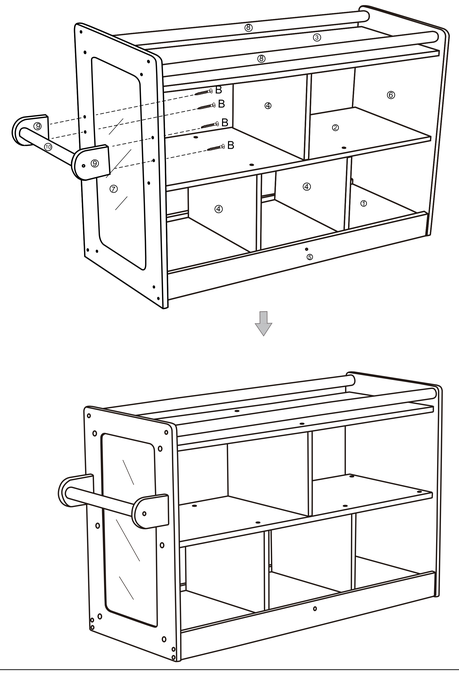

1.As shown in the diagram above, use 2 B.- Hex screws to attach parts 9, 10.

2.Use 4 B.- Hex screws to attach Pull up Rod to main component.

Attention: Remove the film from the mirror after installation.

Reminder: If you have any issues with the product please e-mail us for support at **Bolocon@126.com**

IMPORTANT INFORMATION-PLEASE READ FIRST:

ALL OF OUR WOOEDN ITEMS ARE HANDCRAFTED,HAND ASSEMBLED,AND HAND PAINTED.EACH ONE IS UNIQUE.SLIGHT INPERFECTIONS MAY OCCUR AND ARE NOT MANUFACTURING DEFECTS.EACH ITEM HAS BEEN PAINTED WITH VERY DURABLE PAINT THAT IS BOTH LEAD AND CHROMATE FREE AND SAFE FOR CHILDREN.HOWEVER,IT WILL NOT WITHSTAND ABNORMAL ABUSE AND WITH IMPROPER USE,IT COULD CHIP.

PLEASE NOTE THAT WE DO NOT WARRANTY AGAINST THE USE OF PERMANENT MARKERS,NON-WATER-BASED PAINTS,CRAYONS,OR WASHABLE MARKERS.SOME OF THESE ITEMS CONTAIN PERMANENT COLOR DYES THAT COULD DAMAGE THE SURFACE.

CLEANING INSTRUCTIONS

CLEAN THE SURFACE USING A SLIGHTLY DAMP CLOTH AND MILD DISH WASHING LIQUID IF NECESSARY.DO NOT USE ANY CLEANING PRODUCT CONTAINING ALCOHOL OR AMMONIA.THESE WILL DULL THE SHINY SURFACE OF THE PRODUCT.FURNITURE POLISH WILL ALSO WORK TO CLEAN AND DUST OFF THE SURFACE.

WARRANTY

IMPORTANT:EVIDENCE OF ORIGINAL PURCHASE IS REQUIRED FOR WARRANTY SERVICE.

LENGTH OF WARRANTY:90 DAYS FROM DATE OF PURCHASE.

THIS WARRANTY COVERS EDFECTS THAT WERE A RESULT OF THE MANUFACTURERS PRODUCTIONS.YOU SHOULD CAREFULLY INSPECT THE CONDITION OF THE PRODUCT PRIOR TO ASSEMBLY.THIS WARRANTY IS INVALID IF THE PRODUCT IS DAMAGED OR NOT MAINTAINED PROPERLY.

Development area of Heilin Ganyu Disctrict Lianyungang Jiangsu Pov.China.
lianyungang Shaoxuan Trading CO.,LTD

Bolocon