KINGSTON

TO ORDER PARTS, CALL: 1-877-252-7277
www.kingstonbrass.com

KB6330,1,2,7,8PLTO

Single Handle Pressure Balanced Tub & Shower Faucet, Tub Only

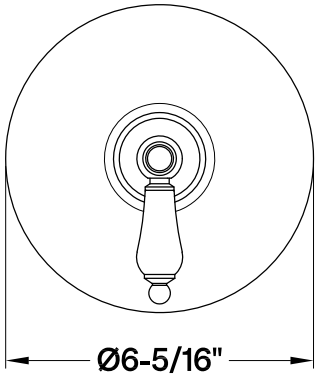

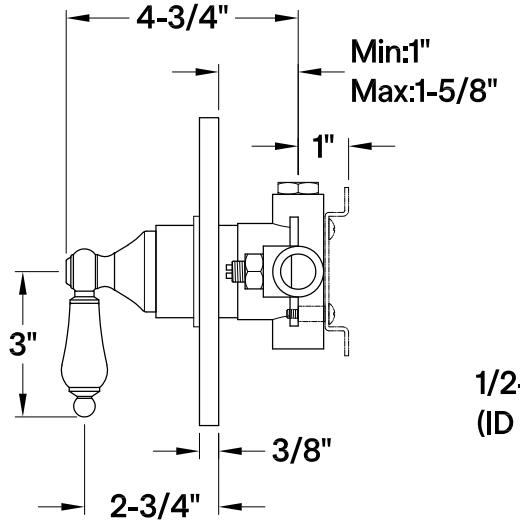

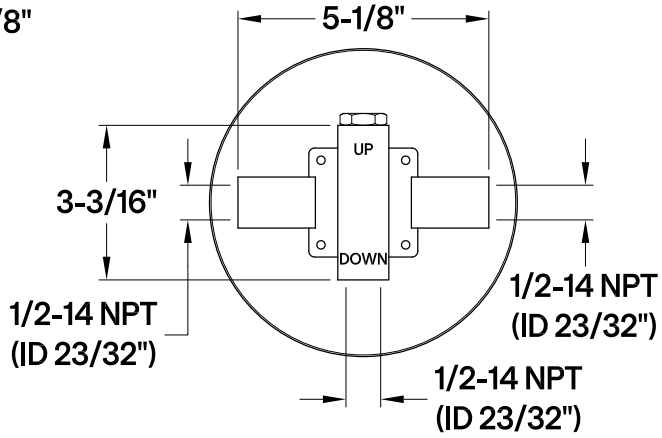

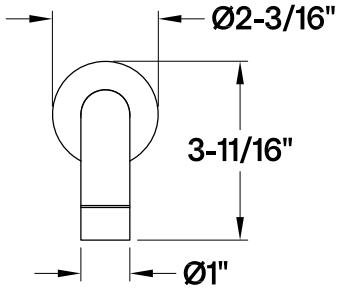

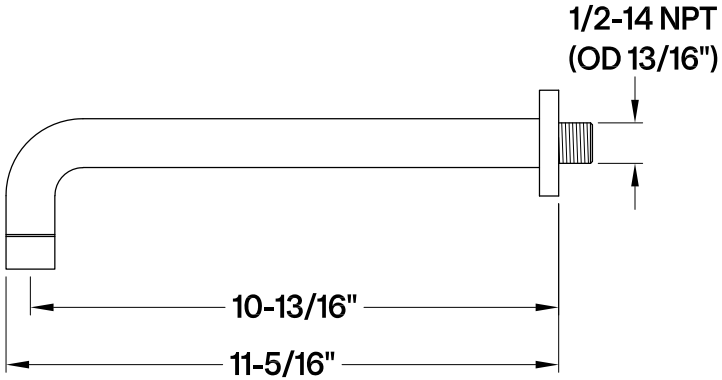

Bracket

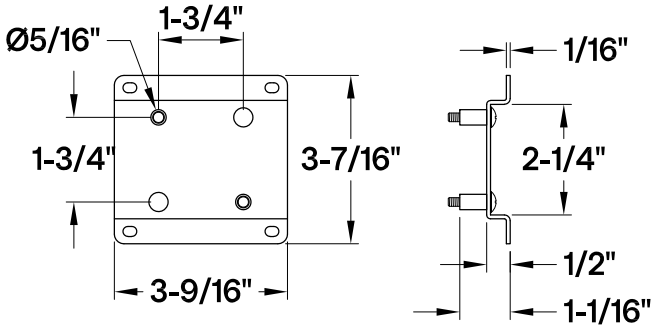

2025-11-B