TEAR SHEET

Lazari Triple Bath Sconce

Item # ARN 2467HAB-CG

Designer: AERIN

Height: 8.75"
Width: 23"
Extension: 9"
Backplate: 4.5" Round
Finishes: HAB, PN
Glass Options: CG
Socket: 3 - E12 Candelabra
Wattage: 3 - 5.5 LED G16.5
Weight: 14 Pounds
Note: 120V Configuration Only



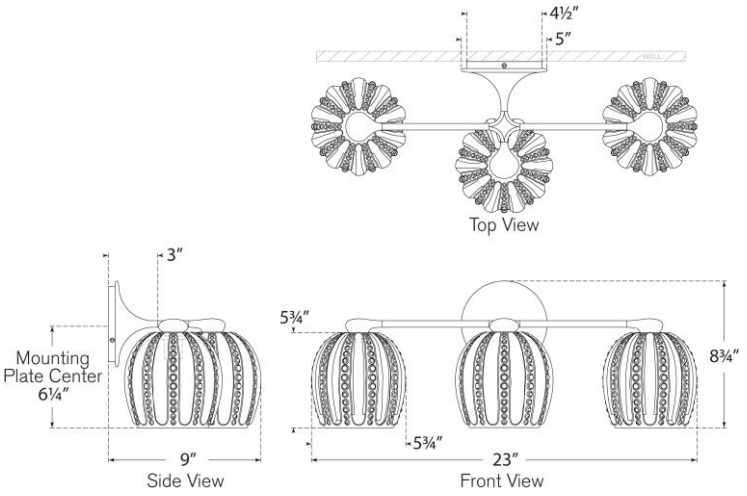

VISUAL COMFORT & CO.