ASSEMBLY & INSTALLATION INSTRUCTIONS FOR #341-6CR 341-8CR

Please read carefully and save these instructions, as you may need them at a later date.

CAUTION

Turn off the main power at the circuit breaker before installing the fixture, in order to prevent possible shock.

GENERAL

All electrical connections must be in accordance with local and National Electrical Code (N.E.C.) standards. If you are unfamiliar with proper electrical wiring connections obtain the services of a qualified electrician.

Remove the fixture and the mounting package from the box and make sure that no parts are missing by referencing the illustrations on the installation instructions.

ASSEMBLY AND INSTALLATION

1. Thread the 1/8" IPS HEX NUT (4) onto the NIPPLE (5), and screw the NIPPLE (5) into the MOUNTING BRACKET (2), without tightening the 1/8" IPS HEX NUT (4).

2. Pull the power supply wires out from the OUTLET BOX (1), and mount the MOUNTING BRACKET (2) to the OUTLET BOX (1), using #8-32 IPS MOUNTING SCREWS (3).

3. Thread the BOTTOM TUBE(22) onto the FIXTURE ASSEMBLY(23), MIDDLE TUBE(21) onto the BOTTOM TUBE(22), UPPER TUBE(20) onto the MIDDLE TUBE(21). Thread the SWIVEL(19) onto the UPPER TUBE(20).

4. Slide the CANOPY (16) onto the NIPPER(18) witch into the other end of the SWIVEL(19), then slide the WASHER(15) and the GROUND WIRE(6) onto the NIPPER(18),secure with the BUTTERFLY NUTS(14).

5. Attach the power supply wires to the fixture lead wires by connecting. the BLACK FIXTURE WIRE (11) to the BLACK SUPPLY WIRE (10), and the WHITE FIXTURE WIRE (9) to the WHITE SUPPLY WIRE (8) using WIRE NUTS (12).Loop the FIXTURE GROUND WIRE (6) around the GROUND SCREW (13) of the MOUNTING BRACKET (2). Connect the remaining FIXTURE GROUND WIRE (6) to the SUPPLY GROUND WIRE (7) using a WIRE NUT (12) . Place wiring and connections inside the OUTLET BOX (1).

6. Place the CANOPY (16) over the OUTLET BOX (1) so that the NIPPLE (5) protrudes out through the mounting hole located in the center of the CANOPY (16) 1/4". Remove the CANOPY (16) and secure the position of the NIPPLE (5) by tightening the 1/8" IPS HEX NUT (4) against the MOUNTING BRACKET (2). Place the CANOPY (16) back onto the NIPPLE (5), and secure into place using the FINIAL (17) provided.

7. Slide the GLASS CUP(25) and the GLASS SHADE(26)(not included) over the SOCKET CUP (24), secure with the SOCKET RING(27).

8. If want to get the fixture socket downward, you can rotate the socket cup clockwise in 180 degree slowly as the FIG2, then, assemble the GLASS CUP (25) and the GLASS SHADE (26) (not included) and onto the socket cup tightened with the SOCKET RING (27).

9. Screw light bulbs into the lamp sockets and make sure they do not exceed the maximum wattage specified on the fixture's wattage rating label.

.

INSTALLATION IS NOW COMPLETED

FIG 1

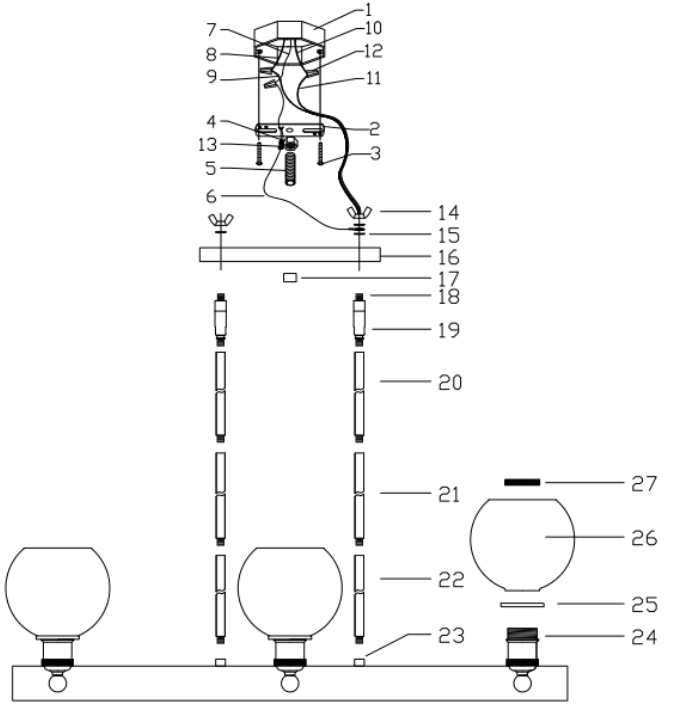

FIG 2

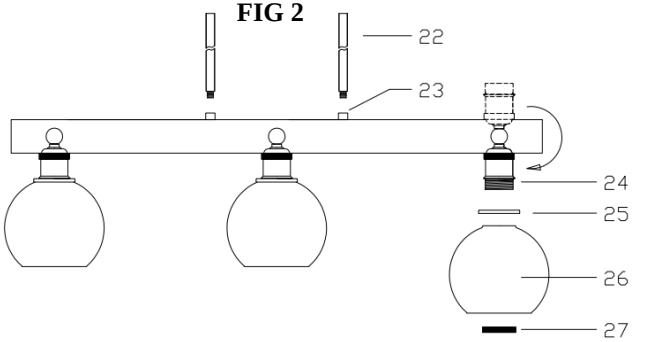

1. OUTLET BOX
2. MOUNTING BRACKET
3. #8-32 IPS MOUNTING SCREW
4. 1/8 IPS HEX NUT
5. NIPPLE
6. FIXTURE GROUND WIRE
7. SUPPLY GROUND WIRE
8. WHITE SUPPLY WIRE
9. WHITE FIXTURE WIRE
10. BLACK SUPPLY WIRE
11. BLACK FIXTURE WIRE
12. WIRE NUT
13. GROUND SCREW
14. BUTTERFLY NUT
15. WASHER
16. CANOPY
17. FINIAL
18. NIPPER
19. SWIVEL
20. UPPER TUBE
21. MIDDLE TUBE
22. BOTTOM TUBE
23. FIXTURE ASSEMBLY
24. SOCKET CUP
25. GLASS CUP
26. GLASS SHADE
27. SOCKET RING