INSTRUCTION MANUAL

MODEL: IF043

PACKAGE LIST

1

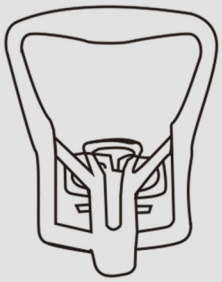

Back Cushion *1

2

Seat Cushion *1

3

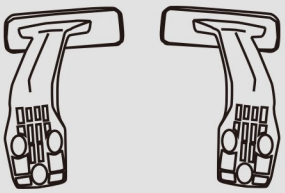

Armrests *2

4

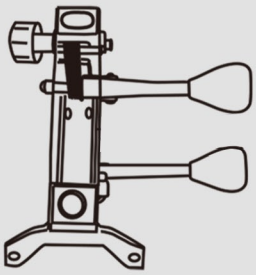

Seat Plate *1

5

Gas Lift *1

6

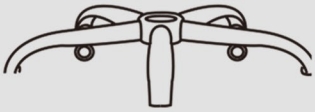

Star Base *1

7

Casters *5

8

Headrest *1

Bolt M6x18mm
x4

Bolt M6x25mm
x2

Bolt M6x30mm
x6

Cover Cap
x2

Allen Wrench
x1

ASSEMBLY INSTRUCTION

STEP 1: Turn the Star Base (6) upside down first, then press the Casters (7) into the holes at the end of each base leg.

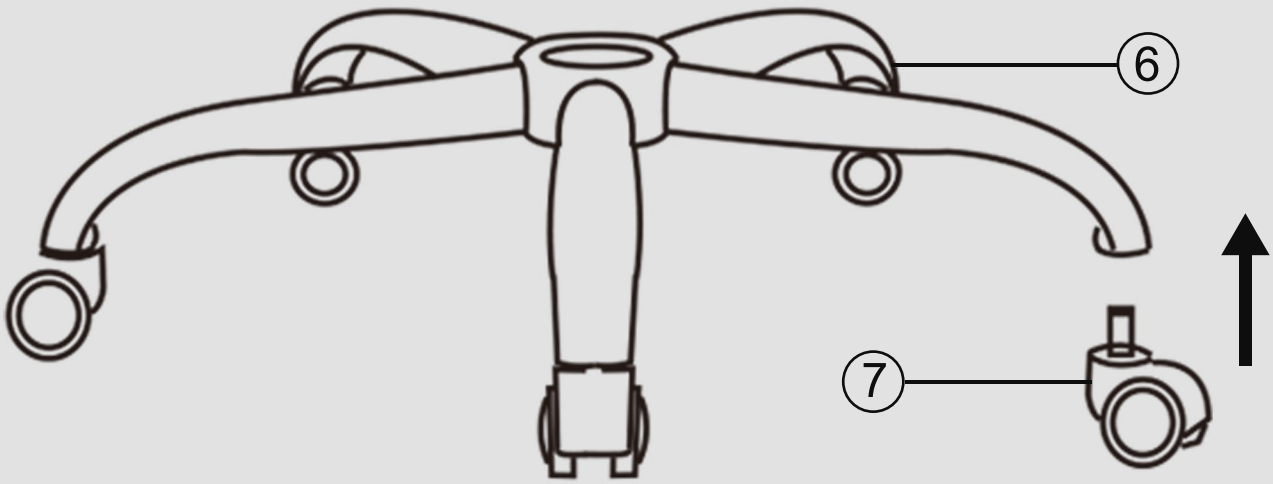

STEP 2: Turn the Star Base (6) upright and insert the Gas Lift (5) into the center hole of the Star Base (6).

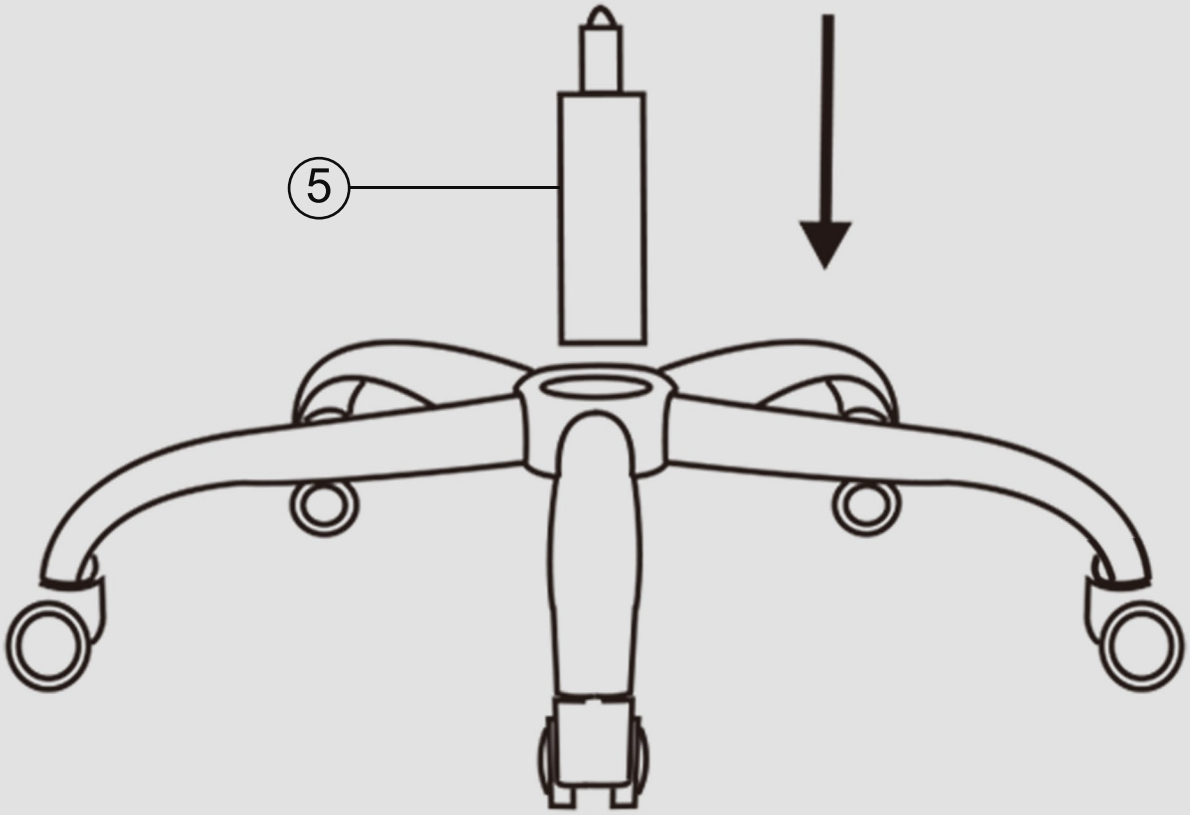

ASSEMBLY INSTRUCTION

STEP 3: Attach the Armrests (3) to the Seat Cushion (2) with Six M6x30mm Bolts (C), using the Wrench (M6).

Attach the Seat Plate (4) to the Seat Cushion (2) using four M6X18mm Bolts (A), tighten all the bolts with the Wrench (M6).

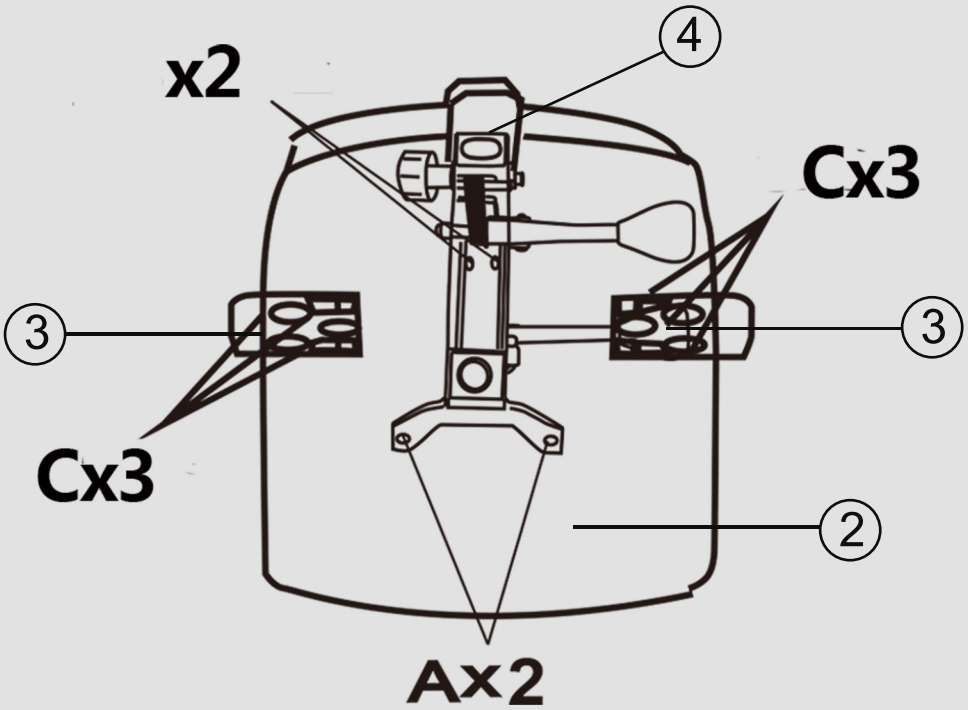

STEP 4 : Turn the Seat Cushion (2) upright and align the center hole of the seat plate over the lift, then push the Seat Cushion (2) down onto the Gas Lift (5) firmly until the connection is

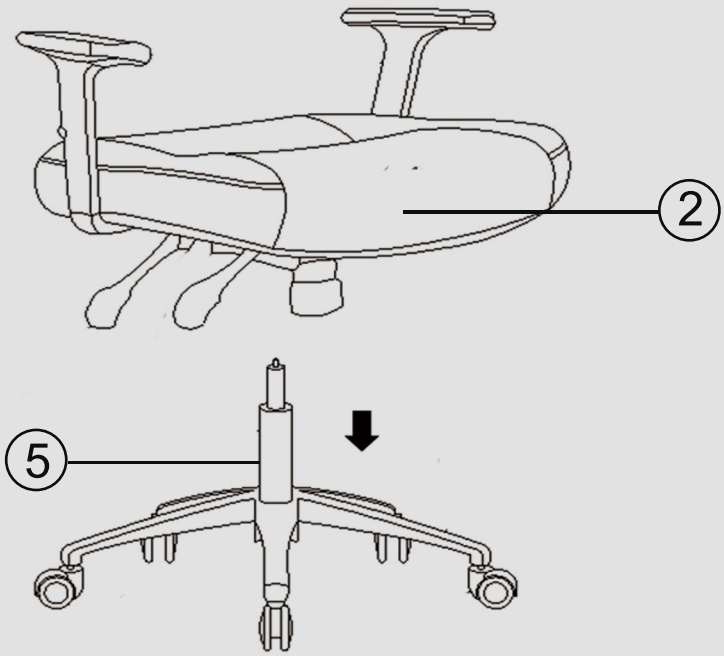

ASSEMBLY INSTRUCTION

STEP 5: Insert the Back Cushion (1) down into the slot of the Seat Cushion (2), then tighten the knob on the Seat Plate (4) to fix the Back Cushion (1).

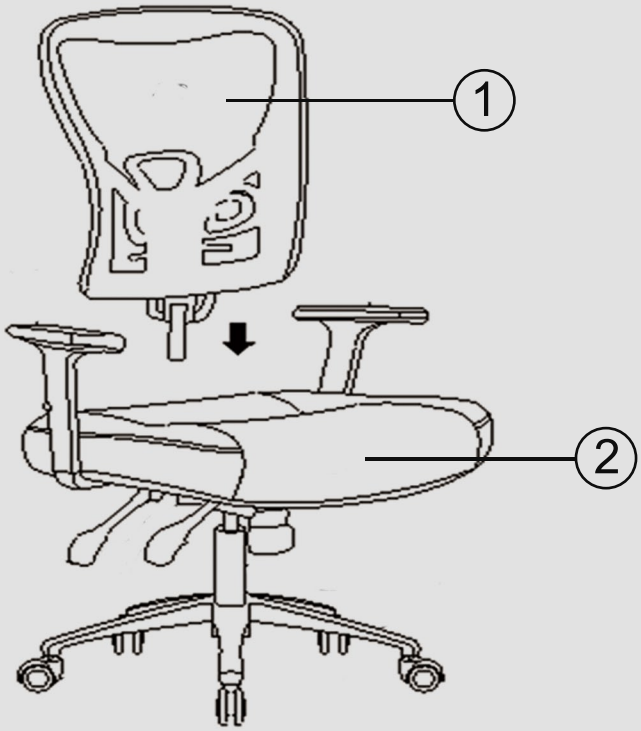

STEP 6 : Insert the Headrest (8) down into the slot of the Back Cushion (1) . Fix the Headrest (8) with two M6x25mm Bolts (B), then press the Cover Caps (F) to cover the bolts.

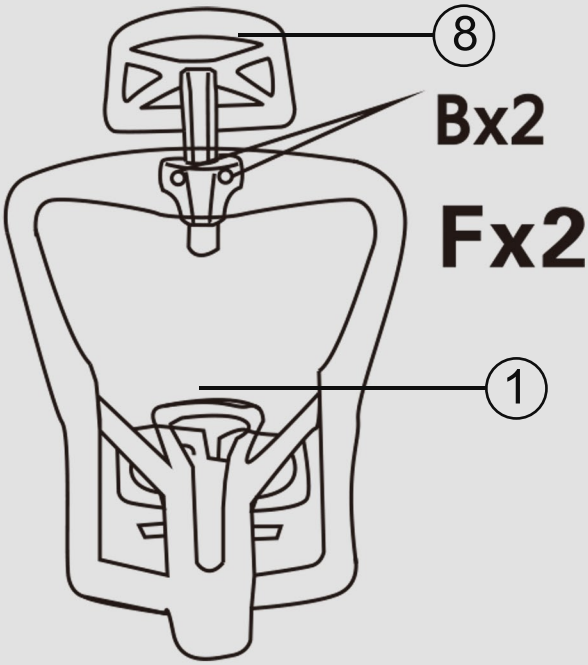

ASSEMBLY INSTRUCTION

STEP 7: Adjust the balance first, then fully tighten all the bolts on each side.

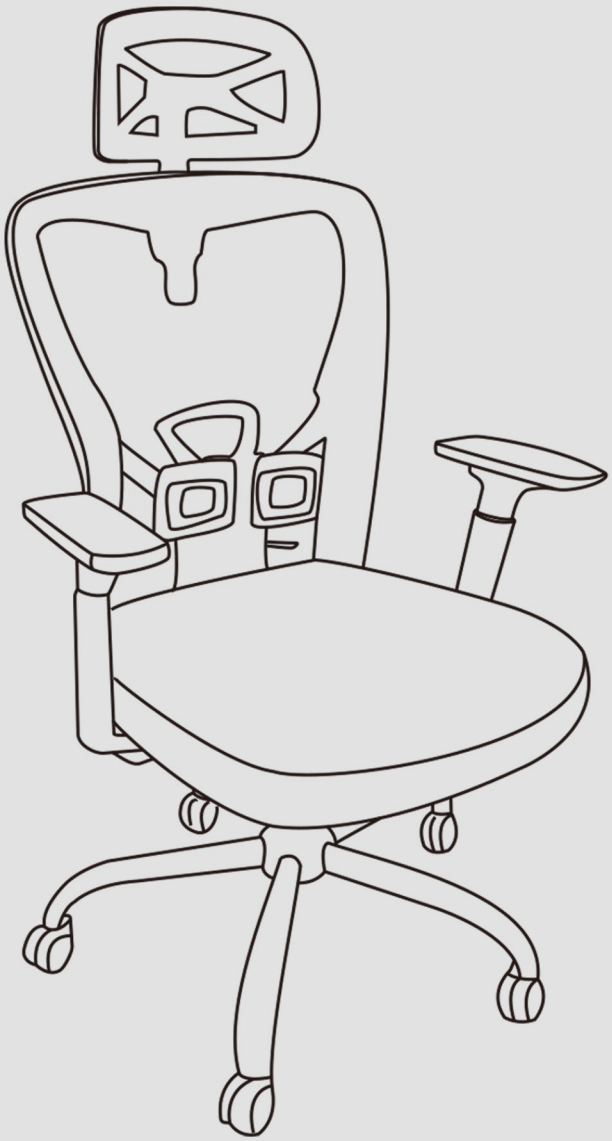

Congratulations! You've assembled this office chair.

WARNING: DO NOT STAND ON THE CHAIR FOR ANY PURPOSE.

Check all screws and tighten the screws that maybe loose each month.