DREAMS IDEA

Instruction Manual



DREAMS IDEA

NO.Barst05S

ABOUT US

DREAMSIDEA IS A ONE-STOP HOME
FURNISHING AND SERVICE COMPANY BASED IN USA.

WE ARE DEDICATED TO BRING YOUR DREAM HOME TO LIFE.

OUR SERVICES COVER FROM DESIGN, PRODUCTION,

DIRECT SELL, STORAGE, AND TRANSPORTATION.

IF REALITY IS THE NEAR SHORE

AND IDEALISM THE FAR SHORE,

DREAMSIDEA
AS THE FERRY BETWEEN THEM,

EAGER TO ACCOMPANY YOU ON A JOURNEY

TO YOUR IDEAL HOME.

ITEM NO.Barst05S

WARRANTY

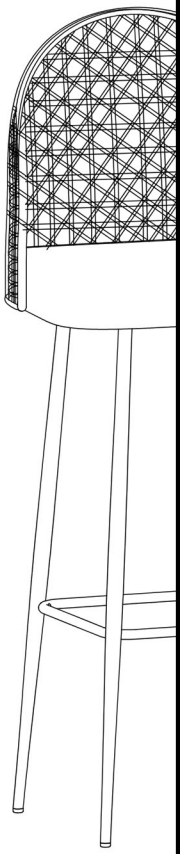

We strive to offer high quality product and we also try our best to satisfy each customer that order from us, no matter on products or services as needed. Each customer receives a record of their order, such as the order number or item receipt. For any items that are out of warranty period, you may still be able to purchase the replacement parts from our company if they are available.

Are you having difficulty
with assembly? Missing parts?
Please contact us : info@firstopintl.com
Tel:(562)-781-3327
send an email with your order No. to us
For return, please check the return policy with the retailer or platforms you bought from.
Appreciate your purchasing from us.
Pop up your life by our furniture !

MAINTAINANCE AND WARNING

Please read the manual thoroughly before you start installing.

Please keep the product away from sharp object.

Packaging and small parts may have chocking hazard, please keep them away from children and pets.

Please clean the product according to each clean code, check the product description for more information.

Please keep the product away from fire.

If you have any other questions, please contact us, we will be glad to help you out.

If the product is placed under direct sunlight, the pattern or color might fade away overtime.

Check the product periodically to make sure everything is secured and tightened.

Always use proper tools for installation.

Do not jump on the product.





One people





Around 25 min

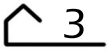

PRODUCT DESCRIPTION

Simple rustic-style high bar stool. The design blends natural wicker elements with modern metal lines, creating a fresh and elegant look. The tall profile and slender legs present a light and airy visual appeal, suitable for various interior styles.

PE wicker backrest + pure metal base and legs. The backrest is woven from PE rattan (plastic wicker), making it lightweight and durable. The pure metal base and four tapered legs form an extremely sturdy and stable support structure, ensuring safety at high seating positions.

Chenille fabric seat cushion. Offers an exceptionally soft, fluffy, and warm touch with a fine, plush surface. It provides excellent skin-friendliness and warmth, delivering a seating comfort superior to typical hard stools.

360° Smooth-Swivel Base: Allows effortless rotation for easy conversation and access from multiple angles at a bar or table, adding fun and flexibility.

Round, thickened seat cushion and curved backrest. The thickened seat enhances sinking comfort. The ergonomically curved wicker backrest provides gentle lumbar support, alleviating fatigue from prolonged sitting and adding a sense of relaxation when leaning

EXPLODED VIEW

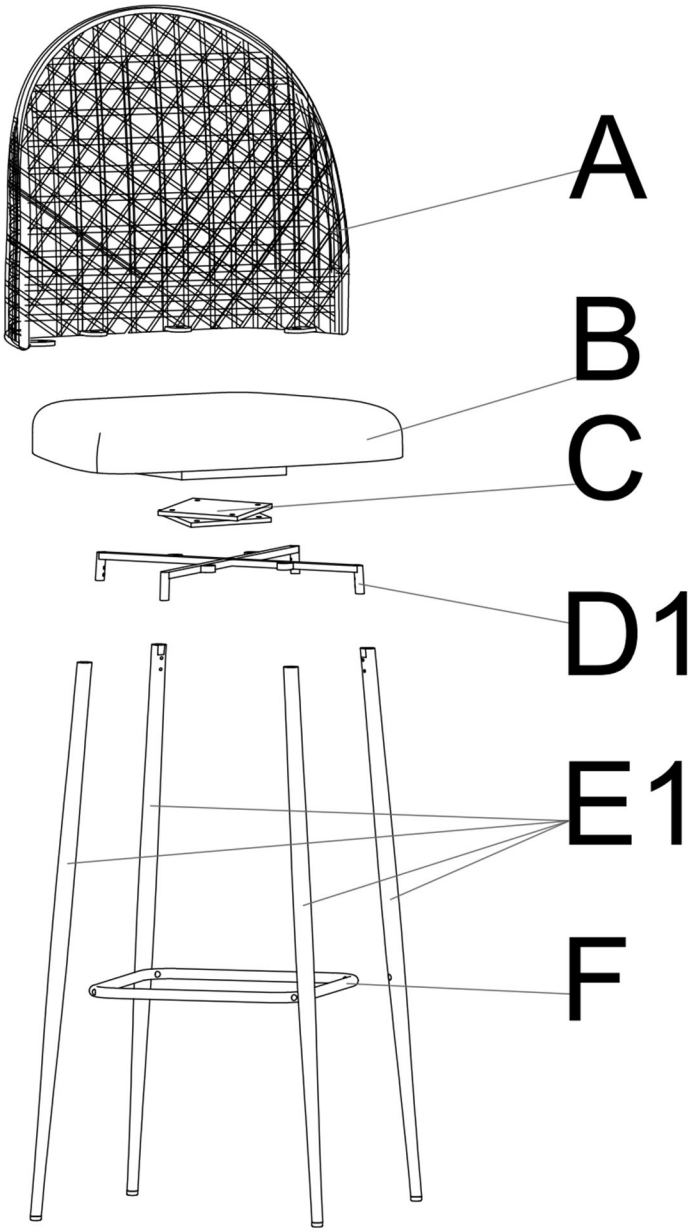

PARTS

A*1

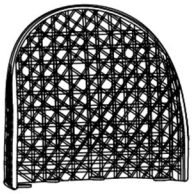

Backrest

B*1



Seat

C*1



Swivel Base

D1*1



Leg frame

E1*4

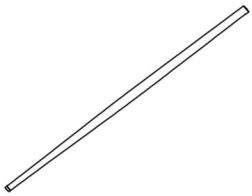

Legs

F*1



Footrest

HARDWARE

TOOL LIST

NOTE: Designated with (★) We provide additional spare parts in the hardware package

①*16



★M6*15mm
Bolt

②*4

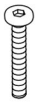

★ M6*30mm
Bolt

③*16



★ M6*15mm
Flat washer

④*1

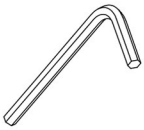

Allen key

⑤*4



★Spring washer

⑥*4



★M6*22mm
Flat washer

Please make sure all hardware&packing material fitting the list. Especially some small accessories may be missing during transportation. Please contact us if you have any question.

step 1---Install the Backrest (A)

Align the pre-drilled bolt holes from the Backrest (A) to the back of the Seat (B) as shown, then place one spring washer (5) and one flat washer (3) in order on each bolt (1), and use the Allen Wrench (4) provided to fix the bolts.

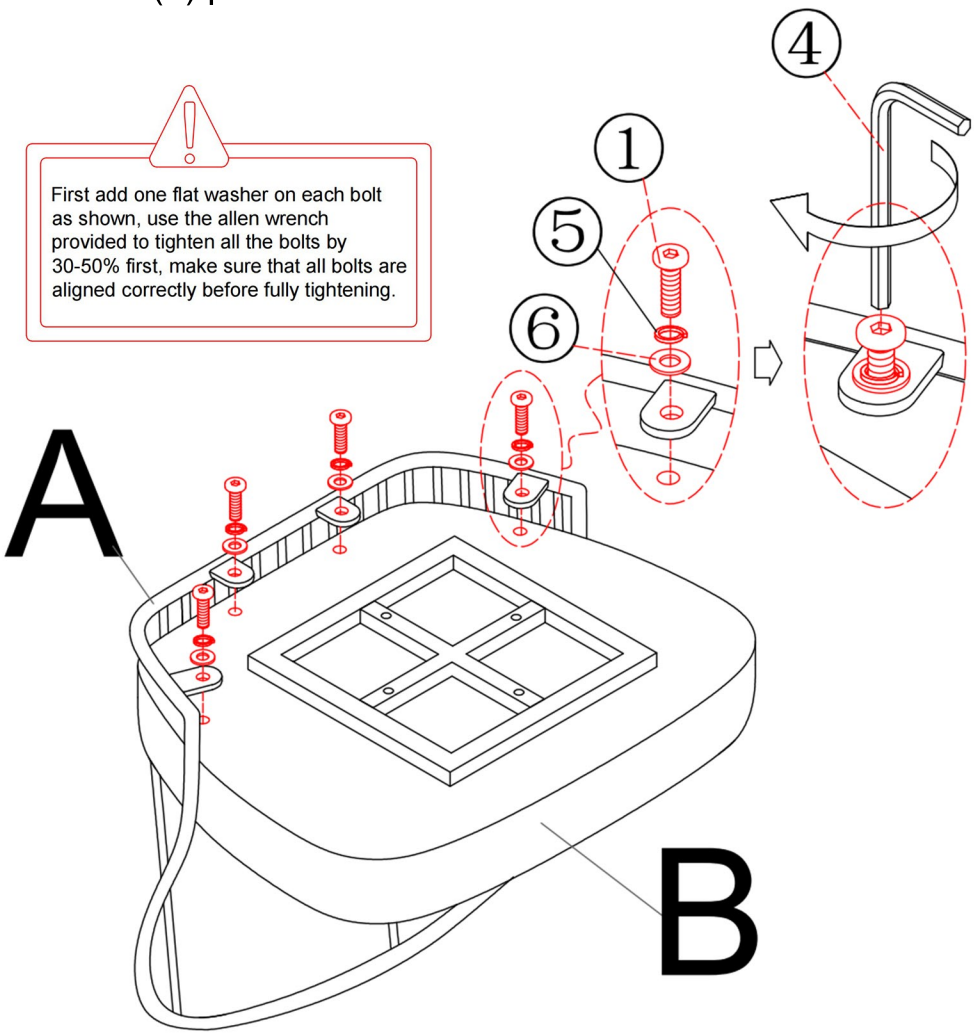

step 2 ---Install the Swivel Base (C)

Turn the Swivel Base (C) to the shown phase. Then fix the Swivel Base to the Leg Frame (D) as shown, make sure the pre-drilled bolt holes on the Swivel Base are correct aligned with the holes on the Leg Frame (D).

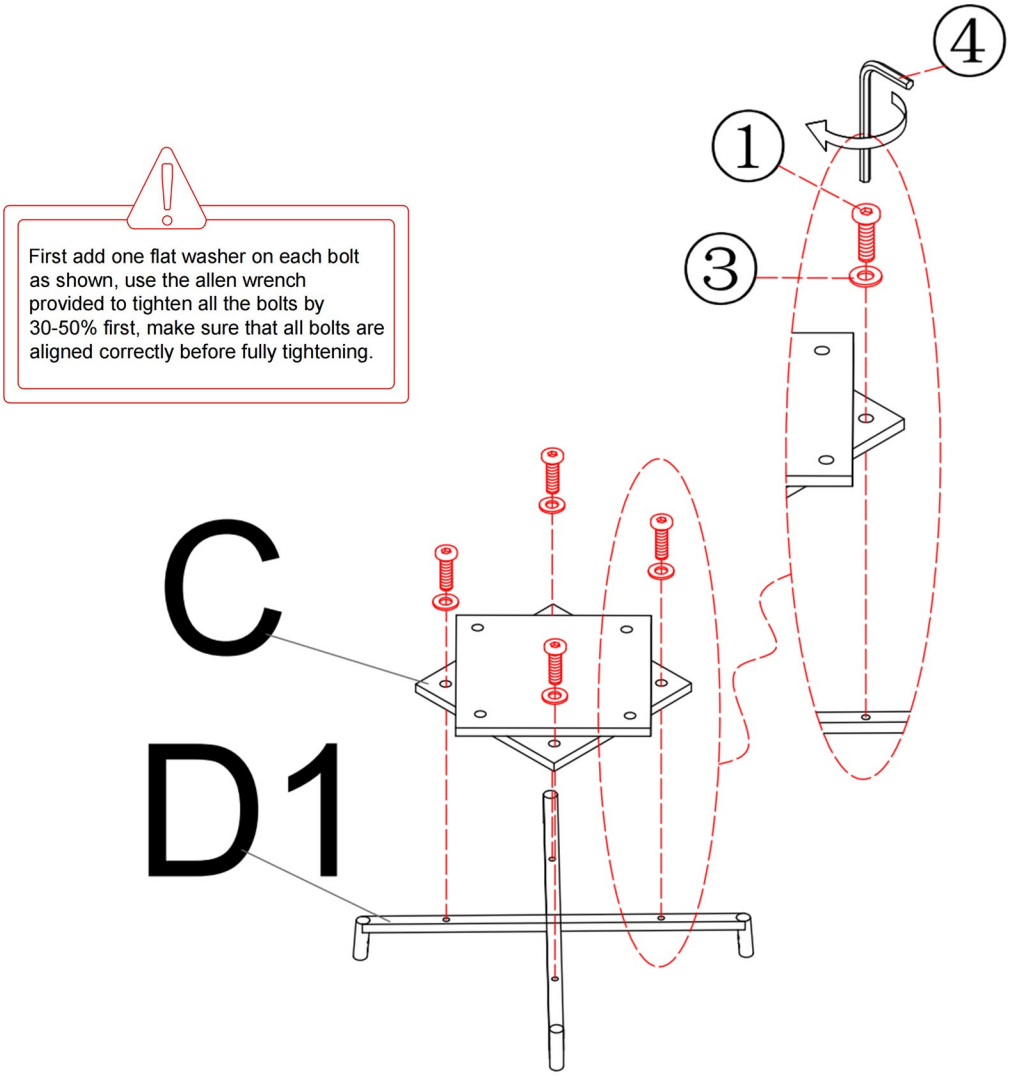

step 3 ---Install the Parts

Install the parts (Swivel Base & Leg Frame) from the previous step to the bottom of the Seat (B) as shown. Place one flat washer (3) on each bolt (1) first, then use the Allen Wrench (4) provided to tighten all the bolts.

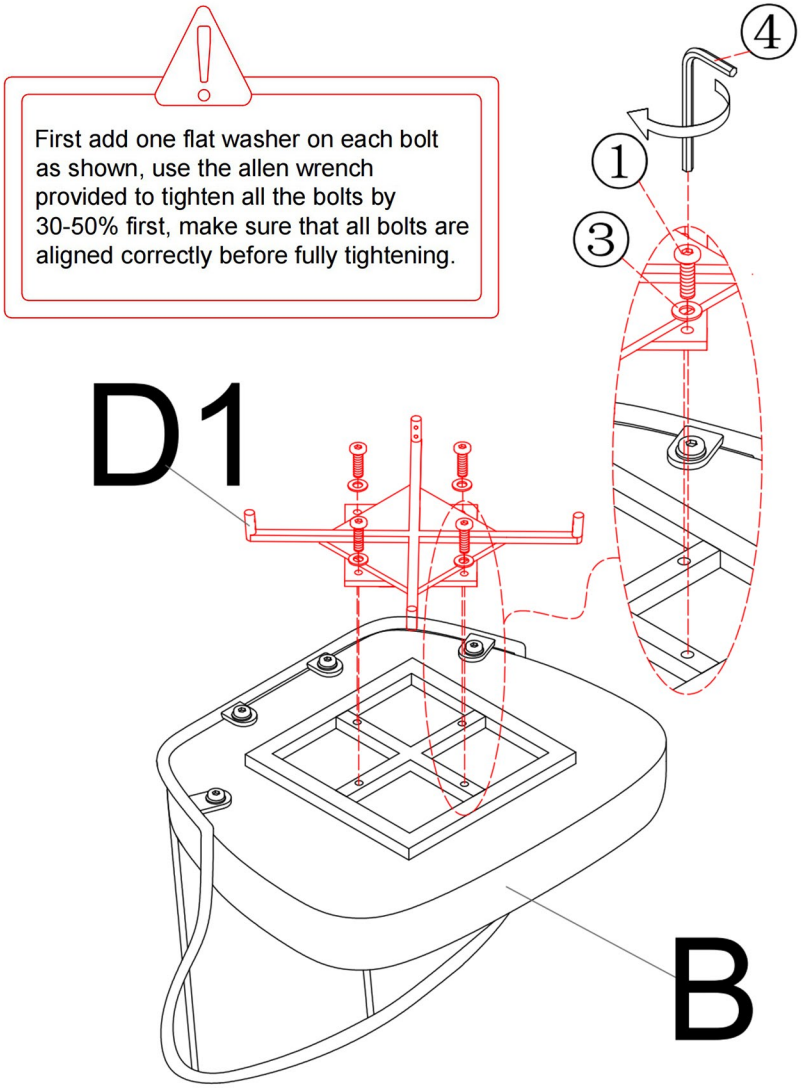

step 4 ---Install the Legs (1)

Insert each Leg (E1) onto the Leg Frame as shown, make sure the pre-drilled bolt holes are aligned with the holes on the frame.

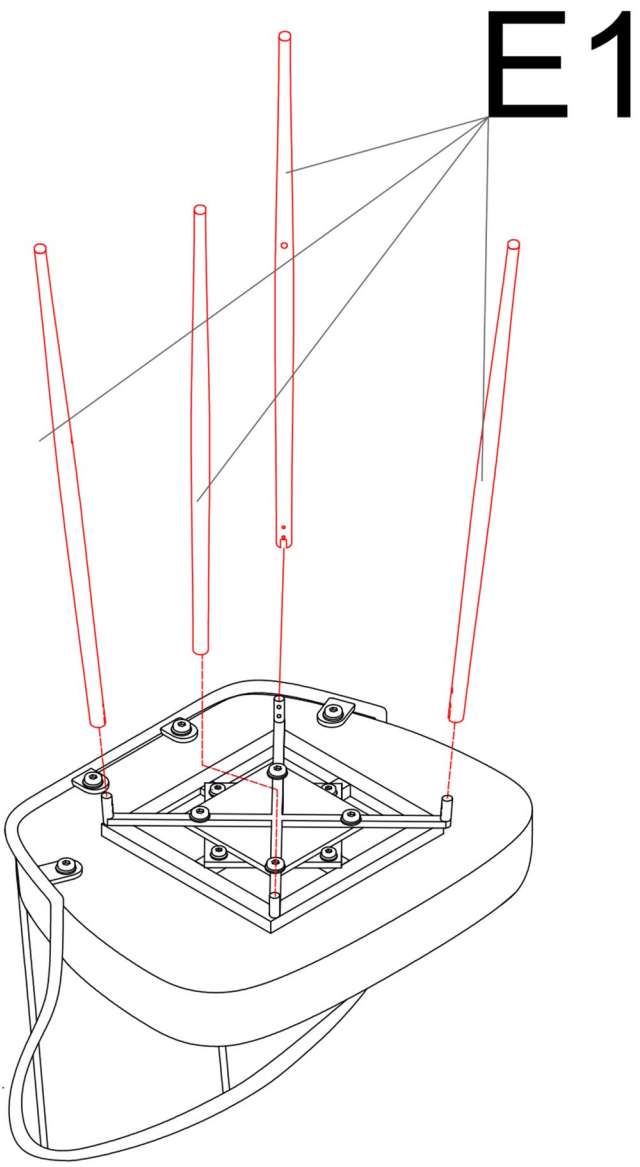

step 5 ---Install the Legs (1)

Use the Allen Wrench (4) provided to tighten the bolts (1) and washer (3) on each leg in order to fix the legs.

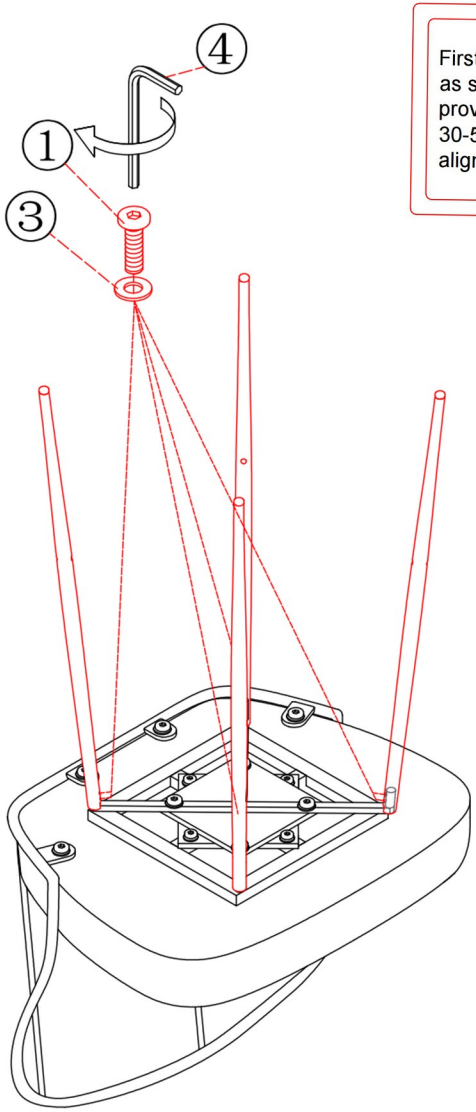

First add one flat washer on each bolt as shown, use the allen wrench provided to tighten all the bolts by 30-50% first, make sure that all bolts are aligned correctly before fully tightening.

step 6 ---Install the Footrest (F)

Install the Footrest (F) to the legs as shown, use the Allen Wrench (4) to tighten one bolt (2) and washer (3) to each leg, make sure the pre-drilled holes on both parts are correctly aligned.

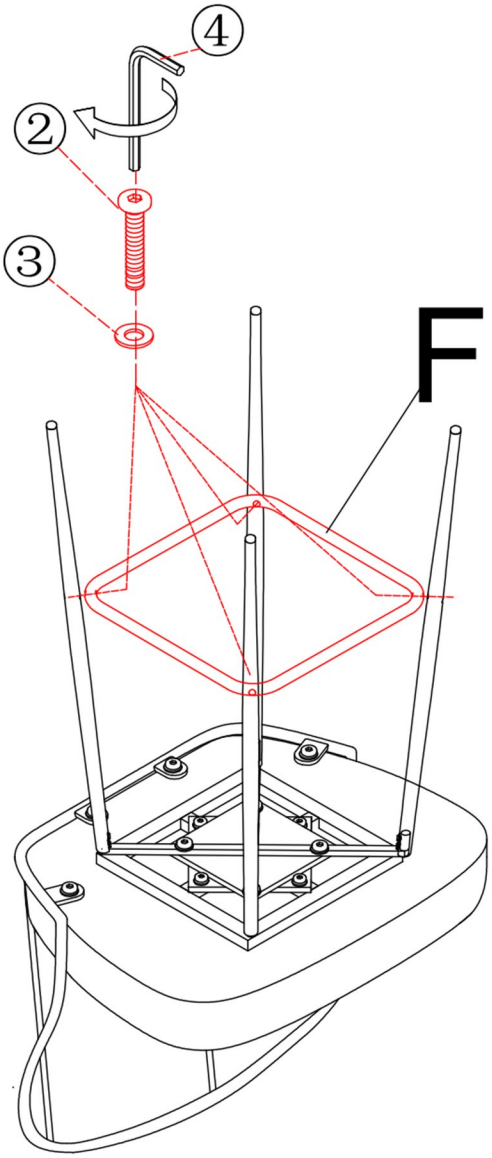

First add one flat washer on each bolt as shown, use the allen wrench provided to tighten all the bolts by 30-50% first, make sure that all bolts are aligned correctly before fully tightening.

step 7 ---Adjust the chair of legs

Please note: the legs of the chair can be adjusted by twisting the leveler on the tip of the legs as shown, it can help you use this chair on ground that is not flat, please check before you use the chair.

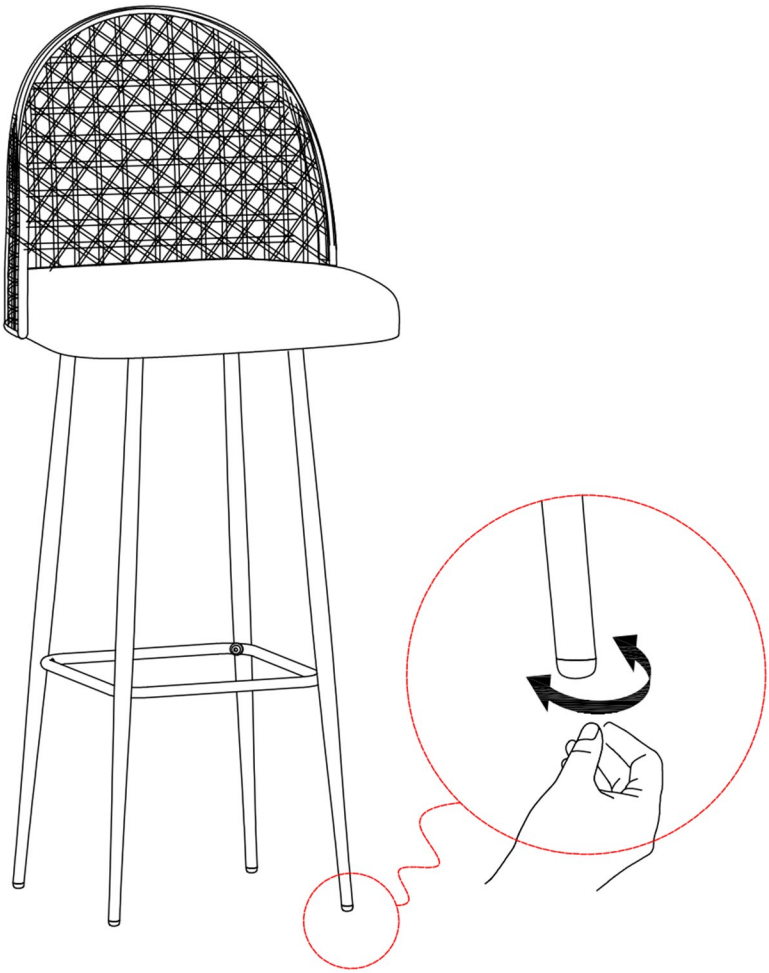



ASSEMBLY INSTRUCTIONS

Tel.(562)-781-3327

Please contact us:info@firstopintl.com

https://www.dreamsidea.com