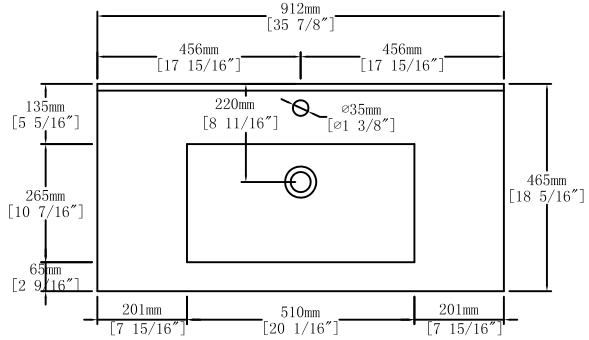

Top View

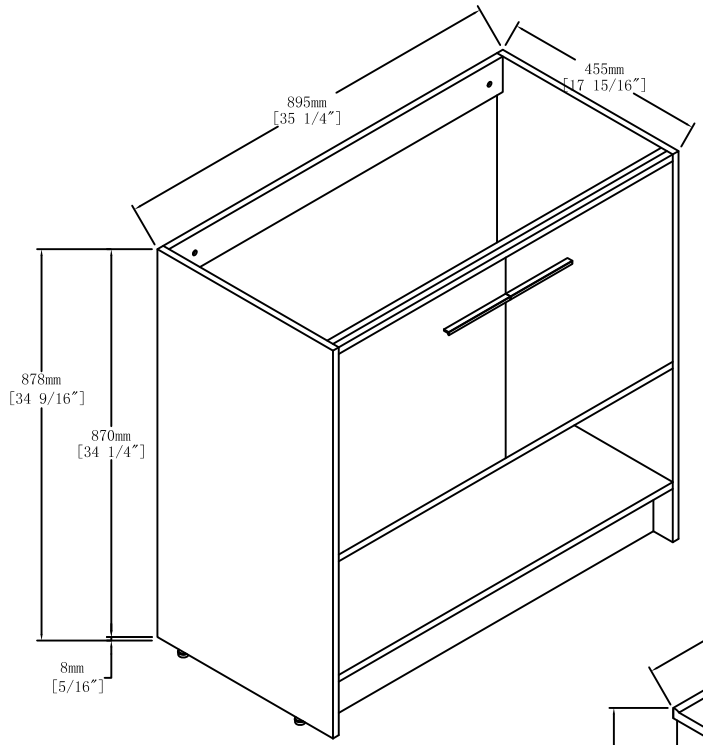

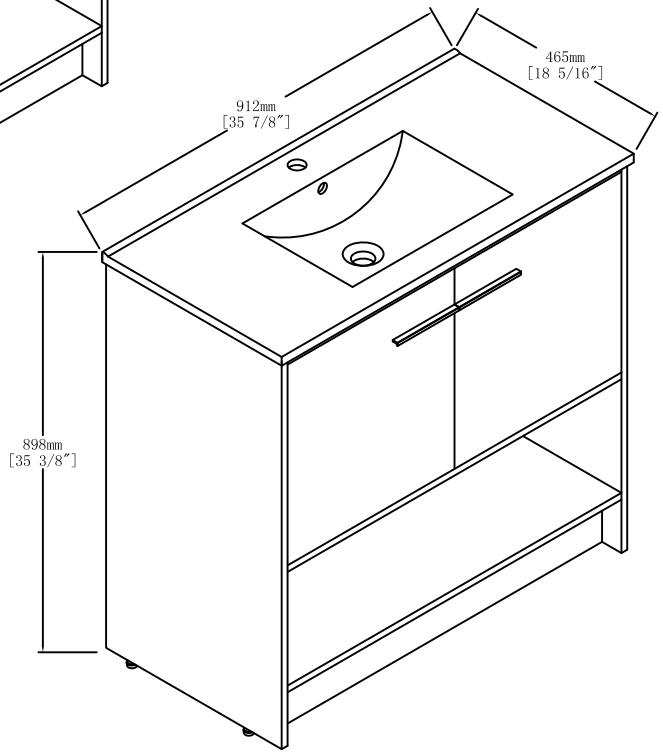

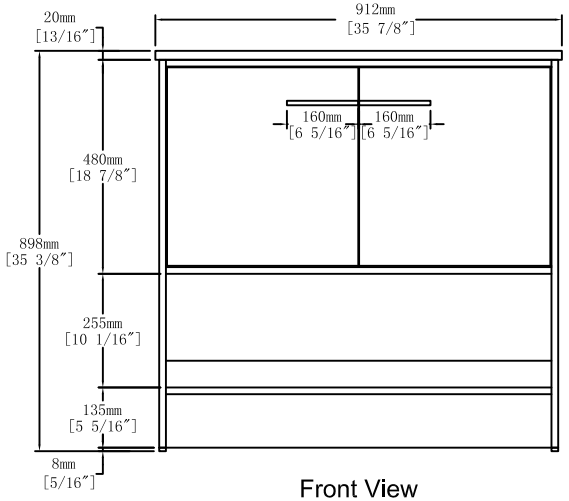

Front View

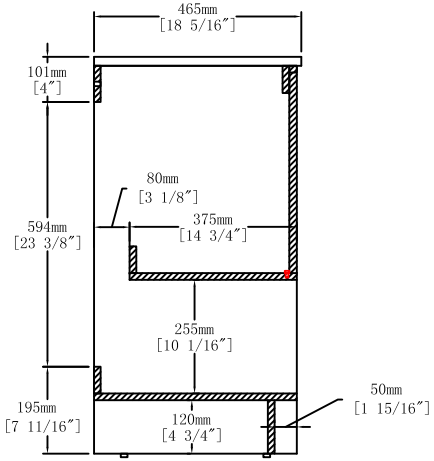

Side View

Item NO.		Version	V1
Project		Date	2024-4-23