FSSSB2018 WIRE GRID

Cat. No.

FSSSB2018-WIRE

BARCLAY

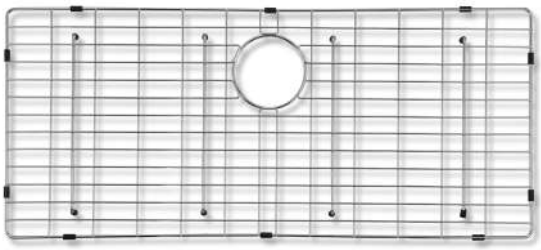

Features:

►Fits bottom of FSSSB2018 farmer sink
►Rubber Feet Covers Included

Finishes:

SS Stainless Steel

W: 23-⅝”
D: 15-⅝”
H: 1”

Drain Hole : 4-¾”

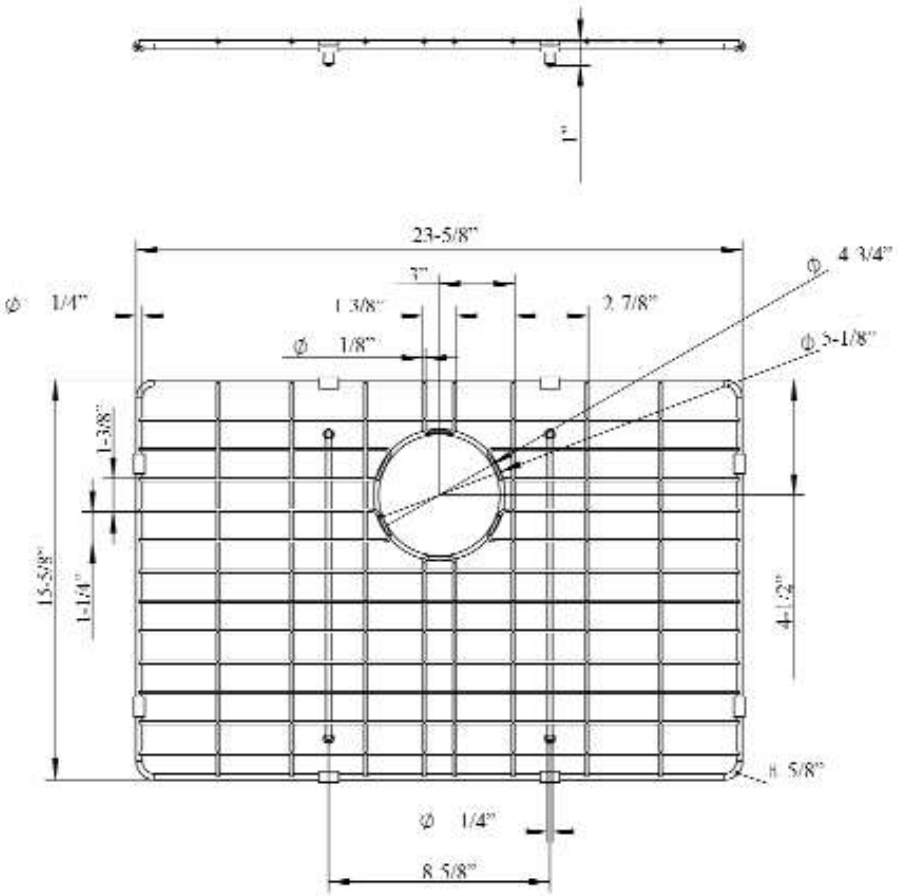

Dimensions and specifications subject to change without notice.