SLIDE-IN ELECTRIC RANGE

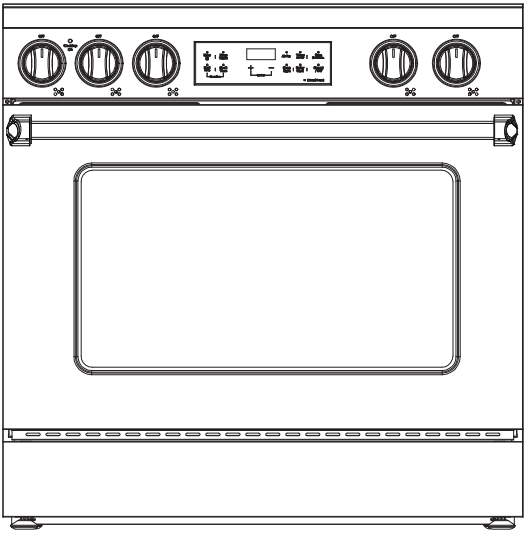

INSTALLATION INSTRUCTIONS

IMPORTANT: **READ AND SAVE THESE INSTRUCTIONS.**
FOR RESIDENTIAL USE ONLY.

INSTALLER: **PLEASE LEAVE THESE INSTRUCTIONS WITH THIS UNIT FOR THE OWNER.**

OWNER: **PLEASE RETAIN THESE INSTRUCTIONS FOR FUTURE REFERENCE.**

Email: **support@ tittla.com**

TABLE OF CONTENTS

Range Safety **4**
Anti-Tip Device 6
Installation Requirements **7**
Tools and Parts 7
Location Requirements 9
Product Dimensions 11
Clearances 13
Power Supply Location 15
Electrical Requirements 16
Installation Instructions **20**
Remove Old Appliance 20
Unpack Range 22
Install Rear Rubber Pads 23
Install Anti-Tip Device 24
Electrical Connection 28
Connecting the Power Cord/Conduit 28
4-Wire Connection 31
3-Wire Connection 33
Install/Remove Control Knobs 35
Install/Remove Oven Door Handle 36
Removing/Assembling Oven Door 39
Removing/Assembling Storage Drawer 41
Complete Installation 42
Placement and Leveling Range 42
Verify Anti-Tip Bracket Engagement 44
Checking Operation of the Surface Heating Elements 46
Checking Operation of the Oven 48

RANGE SAFETY

Read All Instructions Before Using the Appliance

Your safety and the safety of others are very important.

We have provided many important safety messages in this manual and on your appliance. Always read and obey all safety messages.

This is the safety alert symbol.

This symbol alerts you to potential hazards that can kill or hurt you and others.

All safety messages will follow the safety alert symbol and either the word "WARNING" or "CAUTION." These words mean:

⚠ WARNING — You can be killed or seriously injured if you don't follow instructions.

⚠ CAUTION — A potentially hazardous situation which, if not avoided, could result in minor or moderate injury.

All safety messages will tell you what the potential hazard is, tell you how to reduce the chance of injury, and tell you what can happen if the instructions are not followed.

California Proposition 65 Warning

⚠ **WARNING:** Cancer and Reproductive Harm - www.P65Warnings.ca.gov.

⚠ WARNING

- This appliance is intended for normal residential use. It is not approved for commercial use, outdoor installation, or any other application not specifically allowed by this manual.
- This appliance requires connection to a 3-prong or 4-prong, 240VAC single-phase (split-phase), 60Hz grounded electrical source dedicated to the appliance. When installed, appliance must be electrically grounded in accordance with local codes or, in the absence of local codes, with the National Electrical Code, NFPA 70 or the Canadian Electric Code, CSA C22.1-02.
- Proper installation is the responsibility of the installer. Any adjustment and service should be performed only by qualified oven installers or service technicians. The manufacturer is not responsible for any injury or damage that may result from incorrect or defective installation by unauthorized personnel.
- Product failure due to improper installation is not covered under warranty.
- Do not use a steam cleaner to clean the appliance.
- This appliance is not intended to be operated with separate remote control system.

ANTI-TIP DEVICE

⚠ WARNING

Tip Over Hazard

- A child or adult can tip the range and be killed.
- Install anti-tip bracket to floor or wall per installation instructions.
- Slide range back so rear range foot is engaged in the slot of the anti-tip bracket.
- Re-engage anti-tip bracket if range is moved.
- Do not operate range without anti-tip bracket installed and engaged.
- Failure to follow these instructions can result in death or serious burns to children and adults.

Making sure the anti-tip bracket is installed:

- Slide range forward.
- Look for the anti-tip bracket securely attached to floor or wall.
- Slide range back and make sure rear range foot is under anti-tip bracket.

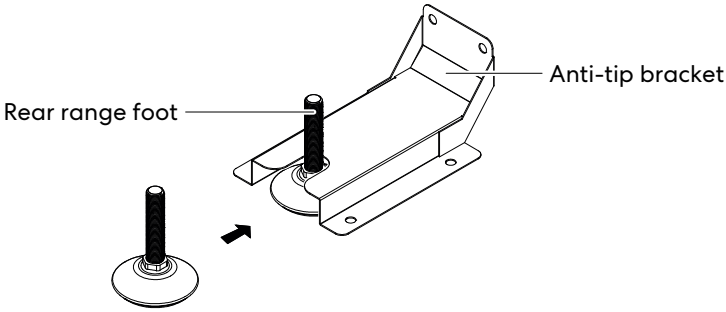

INSTALLATION REQUIREMENTS

TOOLS AND PARTS

Gather the required tools and parts before starting installation. Read and follow the instructions provided with any tools listed here.

TOOLS NEEDED

- Tape measure
- Phillips screwdriver
- Level
- Drill and drill bit (for anti-tip bracket installation)
- Adjustable wrench or pliers
- Marker or pencil
- Safety glasses
- Gloves

PARTS NEEDED

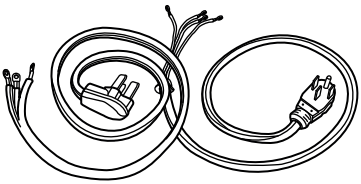

4-Wire or 3-wire power cord (UL approved 40 or 50 AMP)

or

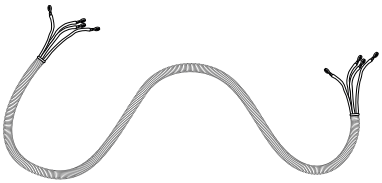

4-wire or 3-wire conduit and wire connectors (UL listed)

If connecting using power cord: Strain relief (UL listed)

or

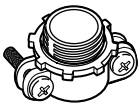

If connecting using conduit: Conduit connector (UL listed)

PARTS SUPPLIED

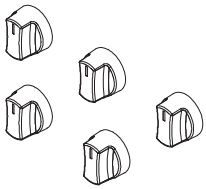

Control knobs (5)

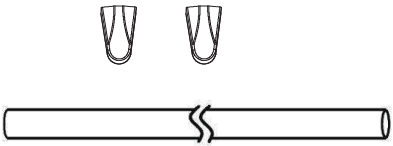

Oven door handle with set screws

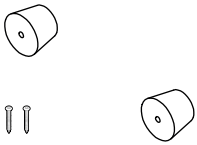

Rear rubber pads (2)

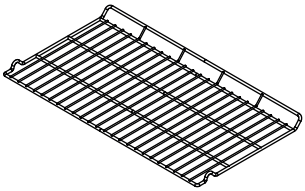

Oven racks (2)

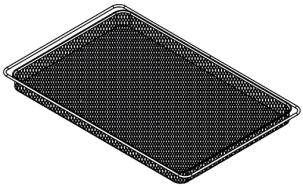

Air fry tray

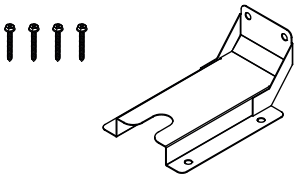

Anti-tip bracket with ST5 x 40 mm mounting screws

Hex key

LOCATION REQUIREMENTS

IMPORTANT: Observe all governing codes and ordinances. Do not obstruct flow of combustion and ventilation air.

- It is the installer's responsibility to comply with installation clearances specified on the model/serial/rating plate. The plate is located behind the oven door on the oven frame, and is also on the back panel of the range.

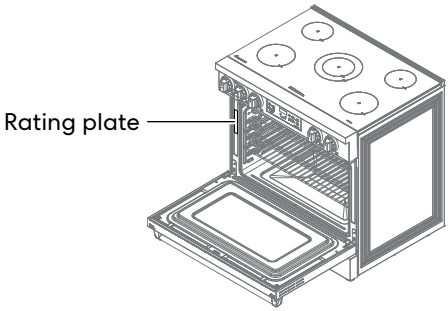

- The range should be located for convenient use in the kitchen.
- Recessed installations must provide complete enclosure of the sides and rear of the range.
- To eliminate the risk of burns or fire by reaching over heated surface units, cabinet storage space located above the surface units should be avoided. If cabinet storage is to be provided, the risk can be reduced by installing a range hood or microwave hood combination that projects horizontally a minimum of 5" (12.7 cm) beyond the bottom of the cabinets.
- All openings in the wall or floor where range is to be installed must be sealed.
- Do not seal the range to the side cabinets.
- Cabinet opening dimensions that are shown must be used.
- The anti-tip bracket must be installed.
- Grounded electrical supply is required. See "Electrical Requirements" section.
- Contact a qualified floor covering installer to check that the floor covering can withstand at least 194°F (90°C).
- Use an insulated pad or 1/4" (0.64 cm) plywood under range if installing range over carpeting.

IMPORTANT: To avoid damage to your cabinets, check with your builder or cabinet supplier to make sure that the materials used will not discolor, delaminate, or sustain other damage. This range has been designed to comply with the maximum allowable wood cabinet temperatures of 194°F (90°C).

Mobile Home - Additional Installation Requirements

- The installation of this range must conform to the Manufactured Home Construction and Safety Standard, Title 24 CFR, Part 3280 (formerly the Federal Standard for Mobile Home Construction and Safety, Title 24, HUD Part 280). When such standard is not applicable, use the Standard for Manufactured Home Installations, ANSI A225.1/NFPA 501A or with local codes.

  In Canada, the installation of this range must conform with the current standards CAN/CSA-A240-latest edition, or with local codes.

Mobile Home Installations Require:

- When this range is installed in a mobile home, it must be secured to the floor during transit. Any method of securing the range is adequate as long as it conforms to the standards listed above.
- Four-wire power supply cord or cable must be used in a mobile home installation. The appliance wiring will need to be revised. See "Electrical Connection" section.

PRODUCT DIMENSIONS

Your model may appear different from the model depicted. Dimensions given are maximum dimensions.

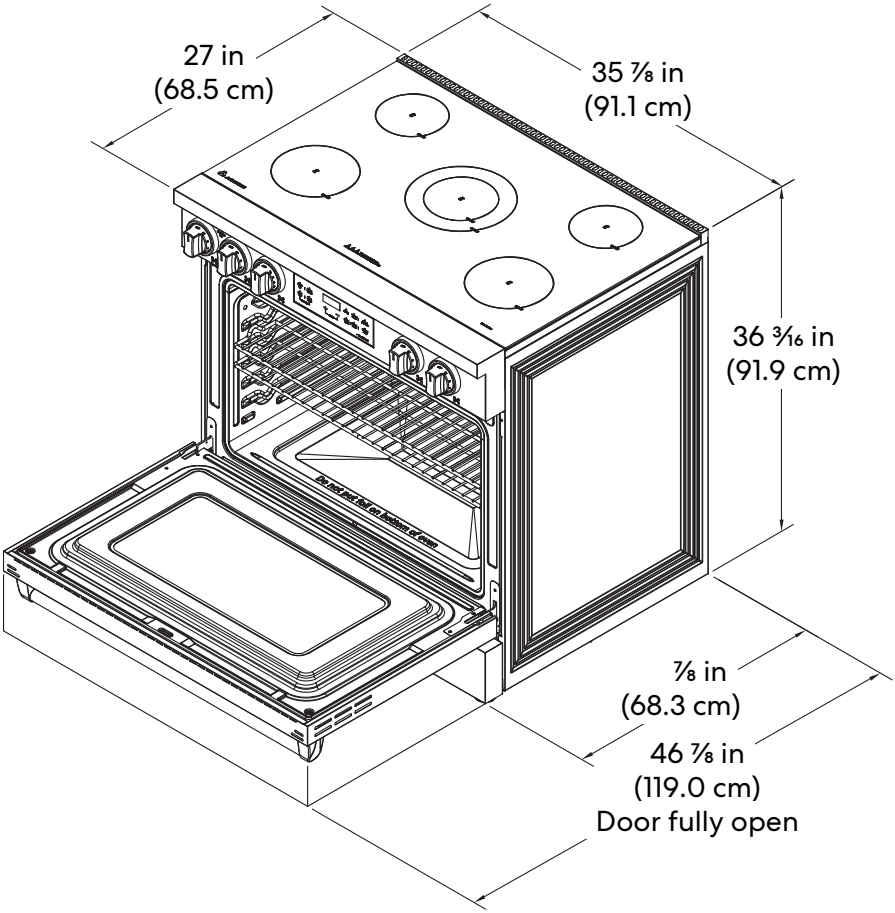

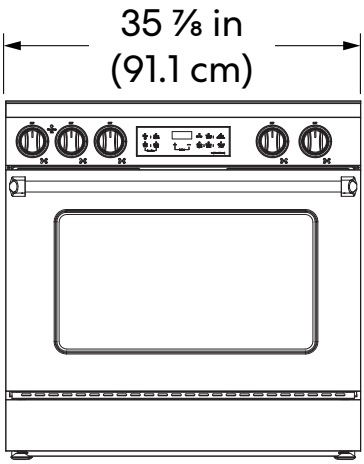

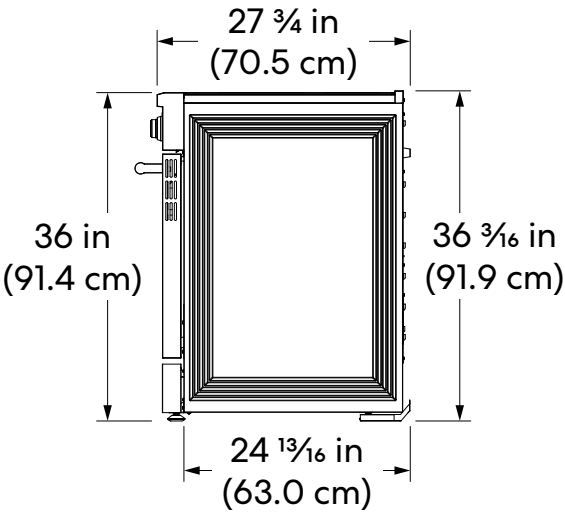

Note:

- Range can be raised approximately 1" (2.6 cm) by adjusting the leveling legs.

CLEARANCES

Cabinet opening dimensions shown are for 25" (64.0 cm) countertop depth, 24" (61.0 cm) base cabinet depth, and 36" (91.4 cm) countertop height.

IMPORTANT:

- Some cabinet and building materials are not designed to withstand the heat produced by the oven for baking and self-cleaning. Check with your builder or cabinet supplier to make sure that the materials used will not discolor, delaminate or sustain other damage.
- If installing a range hood or microwave hood combination above the range, follow the range hood or microwave hood combination installation instructions for dimensional clearances above the cooktop surface.
- Range may be installed next to combustible walls with zero clearance.

Given dimensions are minimum clearances.

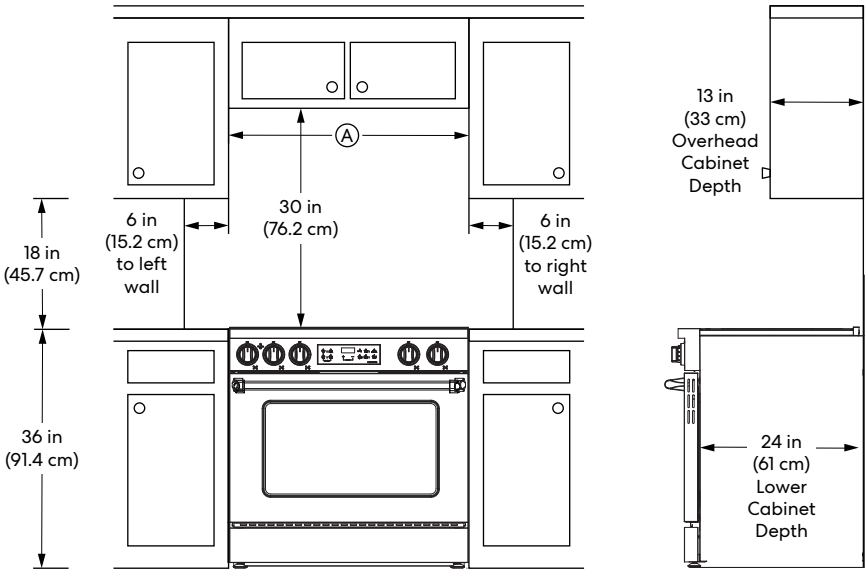

A
Horizontal Clearance
36" (91.4 cm)

Note:

- 30" (76.2 cm) minimum clearance between cooking surface and bottom of an uncovered wood or metal overhead cabinet.
- 24" (61.0 cm) minimum clearance to top of cooking surface when bottom of wood or metal overhead cabinet is shielded by not less than 1/4" (0.64 cm) flame retardant millboard covered with not less than No. 28 MSG sheet steel, 0.015" (0.4 mm) stainless steel, 0.024" (0.6 mm) aluminum or 0.020" (0.5 mm) copper.
- 15" (38.1 cm) minimum clearance from upper cabinet to countertop on either side of unit.
- When installed in a slide-in cutout, the front of oven door may protrude beyond the base cabinet.
- Island Installations: Maintain 6" (15.2 cm) minimum clearance from cutout to back and side edges of countertop.

POWER SUPPLY LOCATION

IMPORTANT: An electrical outlet in the floor, may be either recessed or surface mounted, but an electrical outlet in the wall must be recessed to make the connection.

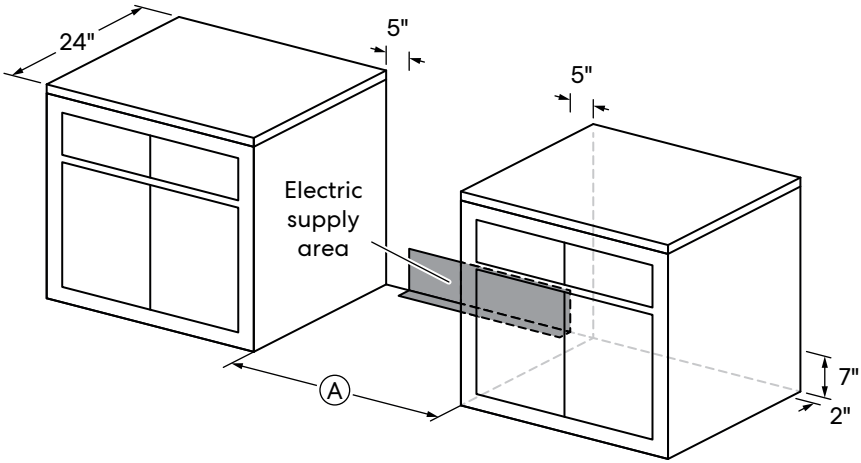

A
Horizontal Clearance
36" (91.4 cm)

ELECTRICAL REQUIREMENTS

⚠ WARNING

Electrical Shock Hazard

- Do not use an extension cord with this appliance.
- Remove house fuse or open circuit breaker before beginning installation.

Electrical Grounding Instructions

- This appliance must be properly grounded.
- All new constructions, mobile homes, recreational vehicles and installations where local codes do not allow grounding through neutral, require a 4-conductor UL-listed range cord.
- Check with a qualified electrician if you are in doubt as to whether the appliance is properly grounded.

U.S.A. ONLY

Be sure that the electrical connection and wire size are adequate and in conformance with the National Electrical Code, ANSI/NFPA No. 70 - latest edition and all local codes and ordinances.

A copy of the above code standards can be obtained from:

National Fire Protection Association
1 Batterymarch Park
Quincy, MA 02169

CANADA ONLY

Be sure that the electrical connection and wire size are adequate and in conformance with the CSA Standard C22.1, Canadian Electrical Code, Part 1 - latest edition and all local codes and ordinances.

A copy of the above code standards can be obtained from:

Canadian Standards Association
178 Rexdale Blvd.
Toronto, ON M9W 1R3 CANADA

ELECTRICAL CONNECTION

If codes permit and a separate ground wire is used, it is recommended that a qualified electrical installer determine that the ground path and wire gauge are in accordance with local codes.

WARNING: Improper connection of the equipment-grounding conductor can result in a risk of electric shock. Check with a qualified electrician or service technician if you are in doubt as to whether the appliance is properly grounded. Do not modify the power supply cord plug. If it will not fit the outlet, have a proper outlet installed by a qualified electrician.

To properly install your appliance, you must determine the type of electrical connection you will be using and follow the instructions provided for it here.

- This appliance must be supplied with the proper voltage and frequency, and connected to an individual (dedicated to the appliance), properly grounded, 40 amp (minimum) branch circuit protected by a circuit breaker or time-delay fuse.
- Effective January 1, 1996, the National Electrical Code requires that new construction (not existing) utilize a 4-conductor connection to an electric range. When installing an electric range in new construction, mobile home, recreational vehicle, or an area where local codes prohibit grounding through the neutral conductor.
- This range may be connected by means of a conduit or power cord.
- A range cord rated at 40 amps with 125/250 minimum volt range is required. If a 50 amp range cord is used, it should be marked for use with 1 3/8" (35 mm) diameter connection openings. Care should be taken to center the cable and strain relief within the knockout hole to keep the edge from damaging the cable.
- Use only a 3-conductor or a 4-conductor UL-listed range cord. These cords may be provided with ring terminals on wire and a strain relief device.
- Allow 2 to 3 ft (61.0 to 91.4 cm) of slack in the line so that the range can be moved if servicing is ever necessary.
- A UL Listed conduit connector must be provided at each end of the power supply cable (at the range and at the junction box).

- The power supply cord and plug should not be modified. If it will not fit the outlet, have a proper outlet installed by a qualified electrician.
- Using an extension cord to connect the power is prohibited. Connect the power cord and plug directly.
- Wire sizes and connections must conform with the rating of the range.
- If using a GFI breaker, the ground wire must be installed correctly to prevent breaker from tripping. Refer to latest edition of the NEC, NFPA No. 70, available from the National Fire Protection Association.
- The wiring diagram is located on the back of the range.

If Connecting to a 4-Wire System:

This range is manufactured with the ground connected to the neutral by a link. The ground must be revised so the green ground wire of the 4-wire power supply cord is connected to the cabinet.

Grounding through the neutral conductor is prohibited for new branch-circuit installations (1996 NEC); mobile homes; and recreational vehicles, or an area where local codes prohibit grounding through the neutral conductor.

When a 4-wire receptacle of NEMA Type 14-50R is used, a matching UL listed, 4-wire, 250-volt, 40- or 50-amp, range power supply cord (pigtail) must be used. This cord contains 4 copper conductors with ring terminals or open-end spade terminals with upturned ends, terminating in a NEMA Type 14-50P plug on the supply end.

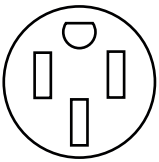

4-wire receptacle (14-50R)

The fourth (grounding) conductor must be identified by a green or green/yellow cover and the neutral conductor by a white cover. Cord should be Type SRD or SRDT with a UL listed strain relief and be at least 4 ft (1.22 m) long.

If Connecting to a 3-Wire System:

Local codes may permit the use of a UL listed, 3-wire, 250-volt, 40- or 50-amp range power supply cord (pigtail).

This cord contains 3 copper conductors with ring terminals or open-end spade terminals with upturned ends, terminating in a NEMA Type 10-50P plug on the supply end. Connectors on the appliance end must be provided at the point the power supply cord enters the appliance. This uses a 3-wire receptacle of NEMA Type 10-50R.

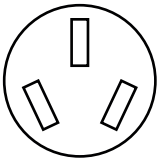

3-wire receptacle
(10-50R)

INSTALLATION INSTRUCTIONS

IMPORTANT: This appliance shall be installed only by authorized persons and in accordance with the manufacturer's installation instructions, municipal building codes, and electrical wiring regulations.

REMOVE OLD APPLIANCE

⚠ WARNING

Fire And Explosion Hazard

If the information in this manual is not followed exactly, a fire or explosion may result causing property damage, personal injury or death.

- Installation and service must be performed by a qualified installer, service agency or the gas supplier.
- WHAT TO DO IF YOU SMELL GAS
  - Do not try to light any appliance.
  - Do not touch any electrical switch.
  - Do not use any phone in your building.
  - Clear the room, building, or area of all occupants.
  - Immediately call your gas supplier from a neighbor's phone. Follow the gas supplier's instructions.
- If you cannot reach your gas supplier, call the fire department.

⚠ WARNING

Electrical Shock Hazard

- Remove house fuse or open circuit breaker to disconnect power before servicing. Failure to do so can result in death, fire, or electrical shock.

⚠ WARNING

Excessive Weight Hazard

- Use two or more people to move and install oven. Failure to do so can result in back or other injury.

⚠ CAUTION

Laceration, Foreign Object, Crush Hazard

- When installing, moving, or servicing any appliance, wear proper protective equipment, including cut resistant gloves, steel-toed shoes, and safety glasses.

1. For old ranges with gas connection, shut off the gas supply valve to the range and leave it off.

2. Shut off the electrical supply to the old range at the breaker box or fuse box and leave it off until the installation has been completed

3. Move appliance to access and disconnect electrical connection and gas connection if applicable.

4. Move appliance out of and away from installation space.

UNPACK RANGE

⚠ WARNING

Excessive Weight Hazard

- Use two or more people to move and install oven. Failure to do so can result in back or other injury.

1. Remove shipping materials, tape and film from the range. Do not dispose of anything until the installation is complete.

2. Remove oven racks and parts package from oven and shipping materials.

3. Using 2 or more people, gently move range close enough but outside its final installation location to allow for final electrical connections.

Note:

- Do not remove any warning-type labels, the model/serial number label, or the Tech Sheet that is located on the back of the range.
- Do not use sharp instruments, rubbing alcohol, flammable fluids, or abrasive cleaners to remove tape or glue. These products can damage the surface of your range.
- Do not push or pull the range by grabbing the open oven door or cooktop only. Doing so can result in serious damage to the range.
- Do not lift the range using the cooktop or oven door handle. Doing so can cause damage and improper operation of the range.
- To reduce the weight of the range while being moved, adjusted, and installed, leave the oven racks and any other accessories to the side until they are ready to be installed later in these instructions.
- To further reduce the weight of the range while being moved, adjusted, and installed, detach the oven door and the storage drawer from the range. See "Removing/Assembling Oven Door" and "Removing/Assembling Storage Drawer" sections.

INSTALL REAR RUBBER PADS

1. Locate the rubber pads from the parts bag.

2. Install the rubber pads to the back panel of range. Do not overtighten.

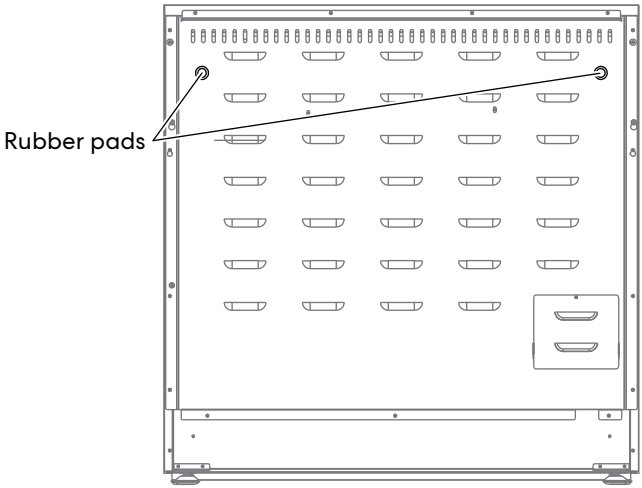

INSTALL ANTI-TIP DEVICE

⚠ WARNING

Tip Over Hazard

- A child or adult can tip the range and be killed.
- Install anti-tip bracket to floor or wall per installation instructions.
- Slide range back so rear range foot is engaged in the slot of the anti-tip bracket.
- Re-engage anti-tip bracket if range is moved.
- Do not operate range without anti-tip bracket installed and engaged.
- Failure to follow these instructions can result in death or serious burns to children and adults.

IMPORTANT:

- An anti-tip bracket is provided with the range.
- The anti-tip bracket uses a rear range foot to secure the range to the floor.
- Attach the anti-tip bracket to the floor or the wall so that the rear range foot will be centered within the bracket when the range is pushed into its final position.

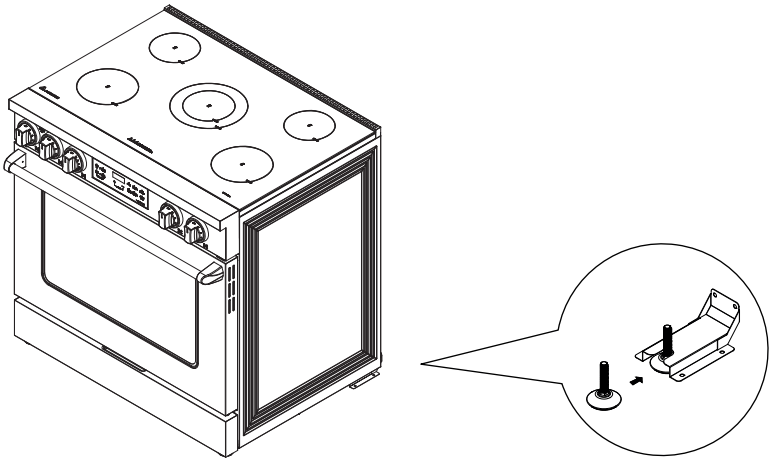

1. Locate and remove the anti-tip bracket and mounting screws from the parts bag.

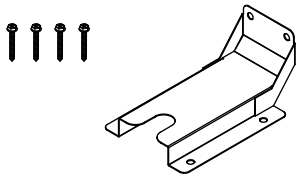

2. Determine which mounting method to use: floor or wall.
   - If you are installing the range in a mobile home, you must secure the range to the floor.

3. Determine and mark centerline of the installation space.

4. Position anti-tip bracket against the wall in the installation space so that the slot of the bracket is 13" (33.0 cm) for 30" model or 16 3⁄16" (41.1 cm) for 36" model from the center line as show. The anti-tip bracket can be installed on either the rear left or rear right side of the installation space.

Note:
- Only one anti-tip bracket needs installed.

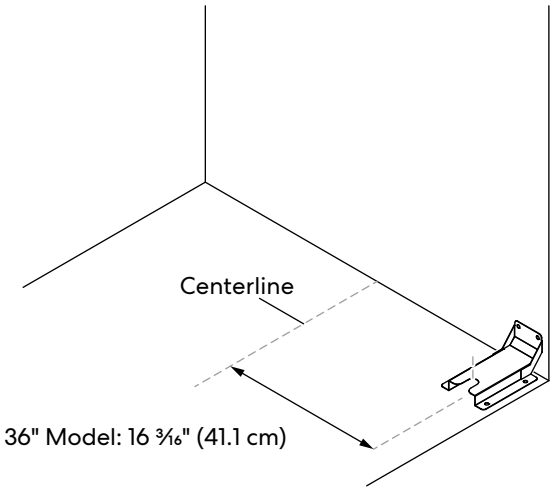

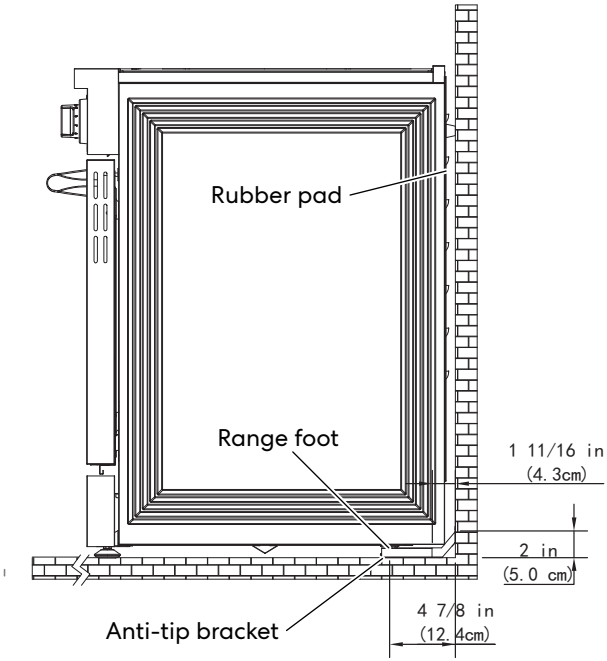

5. Mark two holes that correspond to the anti-tip bracket holes of the determined mounting method.

Wall Mounting

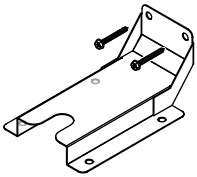

Floor Mounting

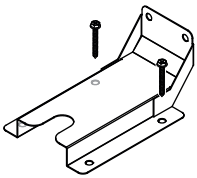

Rear holes

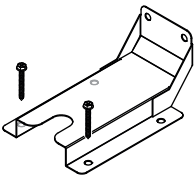

Front holes

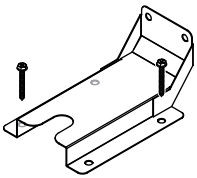

Diagonal (2 options)

6. Drill holes specific to your construction.

Wood Construction

- Drill two 1/8" (3 mm) holes where screws are to be located. Screw must enter wood.

Masonry Construction

- Due to the variety of masonry materials that may be present at installation site, hardware is not provided for attaching the anti-tip bracket to masonry.
- If bracket is to be mounted to masonry or ceramic floors, drill two appropriate holes for 5/16" OD sleeve anchors (with 1/4" bolt - either hex bolt head or hex nut head) rated for minimum 300lb tension for the masonry material present at installation site.

7. Install anti-tip bracket.

Wood Construction

- Mount anti-tip bracket to the wall or floor using the two mounting screws provided.

Masonry Construction

- Mount anti-tip bracket to the floor using two 5/16" OD sleeve anchors (with 1/4" bolt - either hex bolt head or hex nut head).

ELECTRICAL CONNECTION

⚠ WARNING

Electrical Shock Hazard

- Remove house fuse or open circuit breaker to disconnect power before servicing.
- This appliance must be properly grounded.
- Do not use an adapter or an extension cord.
- Failure to do so can result in death, fire, or electrical shock.

IMPORTANT:

- Installation work and repairs should only be performed by a qualified technician in accordance with all applicable codes and standards. Repairs and service by unqualified persons could be dangerous and the manufacturer will not be held responsible.
- Before connecting the appliance to the power supply, make sure that the voltage and frequency listed on the rating label correspond with the household electrical supply. This data must correspond to prevent appliance damage. Consult an electrician if in doubt.
- The oven must connect to a single-phase (split-phase), 3-wire or 4-wire, 120/208 VAC or 120/240 VAC, 60 hertz electrical system. This appliance must be supplied with the proper voltage and frequency, and connected to an individual (dedicated to the appliance), properly grounded branch circuit protected by a circuit breaker or time-delay fuse. It is the personal responsibility of the oven owner to provide the correct electrical service for this oven.
- Local codes and ordinances take precedence over these instructions. Complete electrical connections according to local codes and ordinances.

CONNECTING THE POWER CORD/CONDUIT

1. Access the range electrical terminal block by removing the screw attaching the lower terminal block access cover on the back of the range.

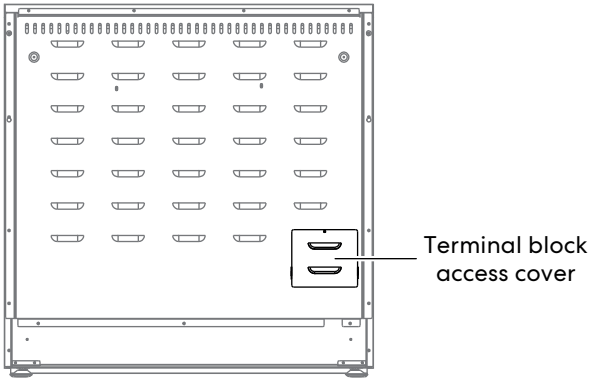

2. Install the power cord or conduit.

> **Note:**
> - Do not install the power cord or conduit without a strain relief. The strain relief bracket must be installed before replacing the terminal block access cover.

For Power Cord Installations

- Hook the strain relief over the power cord hole below the terminal block. Insert the power cord through the strain relief and tighten it. Allow enough slack to easily attach the cord terminals to the terminal block.

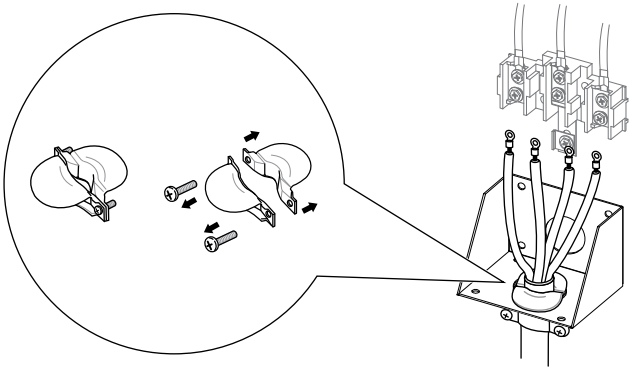

For Conduit Installations

- Strip outer covering back 3" (7.6 cm) to expose wires.
- Strip the insulation back 3/8" (1.0 cm) from the end of each wire.
- Unscrew and align the cord/conduit connection bracket so that the smaller 1 1/8" (2.8 cm) conduit hole is at the bottom, then replace the bracket.

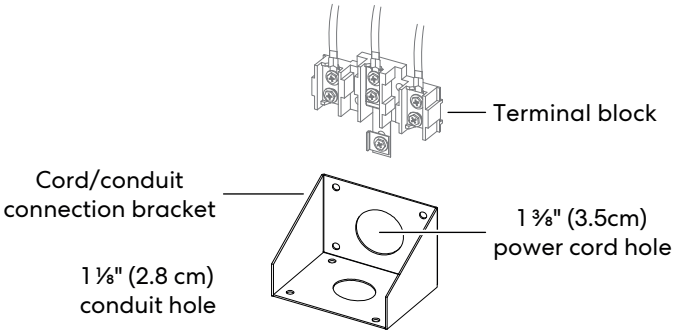

- Insert the conduit strain relief in the conduit hole below the terminal block. Install the conduit through the body of the strain relief and fasten the strain relief with its ring. Allow enough slack to easily attach the wires to the terminal block.

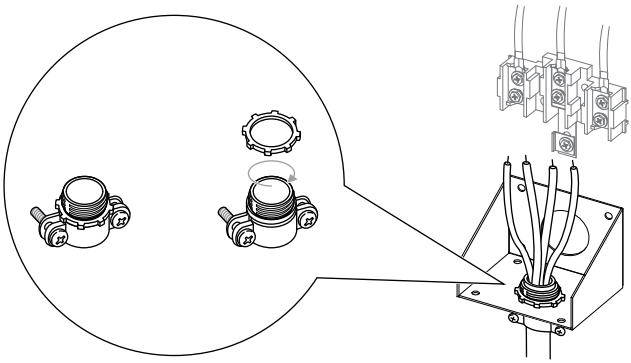

3. Complete installation following instructions for your type of electrical connection:

- 4-wire (recommended)
- 3-wire (if 4-wire is not available)

4-WIRE CONNECTION

Use this method for:

- New branch-circuit installations (1996 NEC)
- Mobile homes
- Recreational vehicles
- Areas where local codes prohibit grounding through the neutral

⚠ WARNING

- The neutral wire of the supply circuit must be connected to the neutral terminal located in the lower center of the terminal block. The power leads must be connected to the lower left and the lower right terminals of the terminal block. The grounding lead must be connected to the frame of the range with the ground screw. Failure to do so can result in electrical shock, severe personal injury or death.

Power Cord

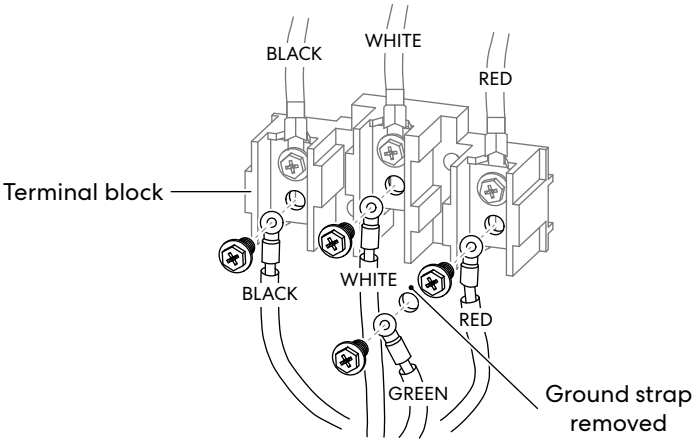

1. Remove and retain the lower 3 terminal screws from the terminal block.

2. Remove the ground screw. Remove or cut part of metal ground strap.

3. Insert the ground screw through the power cord ground (green) wire terminal ring, and secure it to the frame of the range.

4. Insert the 3 terminal screws through each power cord terminal ring and into the lower terminals of the terminal block. Make sure that the neutral (white) wire is connected to the lower center position of the terminal block.

5. Tighten the 3 terminal screws securely into the terminal block, and replace the terminal block access cover.

Conduit

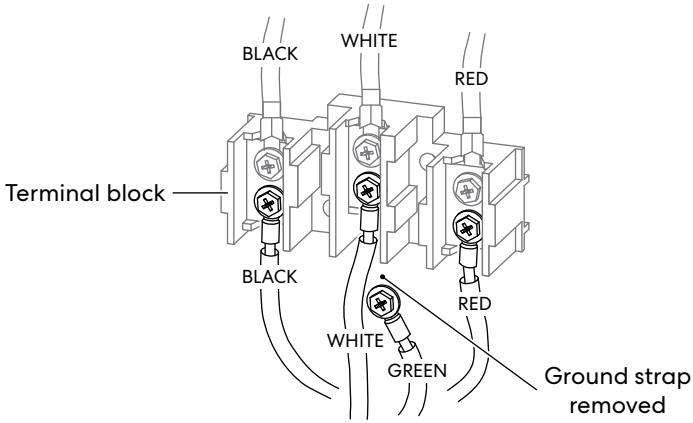

1. Loosen the lower left and lower right terminal screws from the terminal block.

2. Remove the lower center terminal screw and the ground screw. Remove or cut part of metal ground strap.

3. Attach the bare ground (green) wire end to the range frame and secure it in place with the ground screw.

4. Insert the bare neutral (white) wire end into the lower center terminal block opening.

5. Insert the two remaining bare wire ends into the lower left and the lower right terminal block openings.

6. Tighten the 3 terminal screws securely into the terminal block, and replace the terminal block access cover.

3-WIRE CONNECTION

Use this method only if local codes permit connecting chassis ground conductor to neutral wire of power supply cord.

⚠ WARNING

- The neutral or ground wire of the power cord must be connected to the neutral terminal located in the lower center of the terminal block and the ground strap must connect the neutral terminal to the ground plate. The power leads must be connected to the lower left and the lower right terminals of the terminal block. Failure to do so can result in electrical shock, severe personal injury or death.
- Do not remove the ground strap connection.

Power Cord

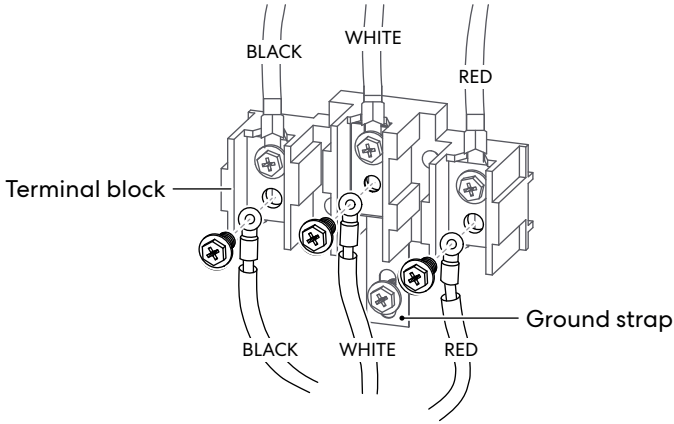

1. Remove and retain the lower 3 terminal screws from the terminal block. Do not remove the ground strap connection.

2. Insert the 3 terminal screws through each power cord terminal ring and into the lower terminals of the terminal block. Make sure that the neutral (white) wire is connected to the lower center position of the terminal block.

3. Tighten the 3 terminal screws securely into the terminal block, and replace the terminal block access cover.

Conduit

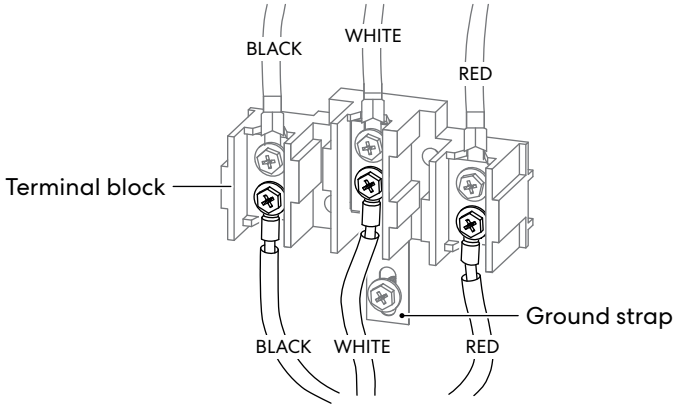

1. Loosen the lower 3 terminal screws from the terminal block. Do not remove the ground strap connection.

2. Insert the bare neutral (white) wire end into the lower center terminal block opening.

3. Insert the two remaining bare wire ends into the lower left and the lower right terminal block openings.

4. Tighten the 3 terminal screws securely into the terminal block, and replace the terminal block access cover.

INSTALL/REMOVE CONTROL KNOBS

Be very careful not to scratch the surface of the unit. The appearance of the knobs may vary from what are shown below.

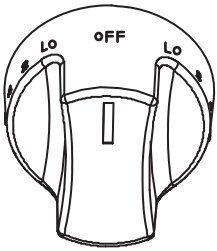

Dual element knob

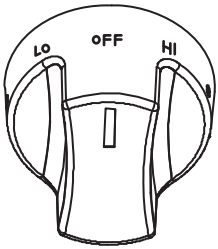

Single element knob

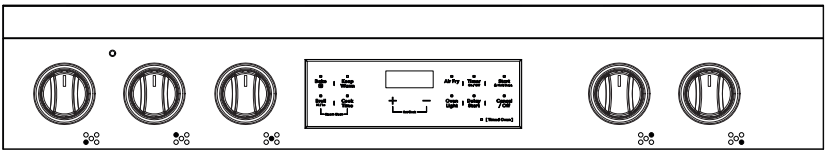

Surface element knobs

Oven touch controls

Surface element knobs

INSTALLING THE CONTROL KNOB

1. Hold the knob in an upright position with the OFF marking facing upward. Observe the open part centered on the back of the knob.

2. Place and align the open part on the back of the knob over the control stem that is sticking out of the control panel.

3. Press the knob onto the stem, and make sure the knob is in the OFF position.

REMOVING THE CONTROL KNOB

1. Pull the knob straight off the stem.

INSTALL/REMOVE OVEN DOOR HANDLE

Be very careful not to scratch the surface of the unit. The appearance of the handle may vary from what is shown below, but the installation will be the same.

Tool Needed

- Hex key (provided)

INSTALLING THE HANDLE

1 Check your Installation Kits for Door Handles

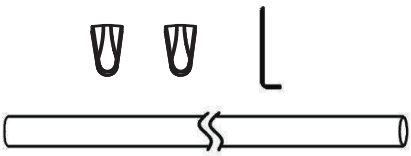

2 * Handle Holders, 1 * Installation Wrench,

1 * Handle (For 18”, 30” or 36” Oven)

2 Connect door handle holders to each side of the handle

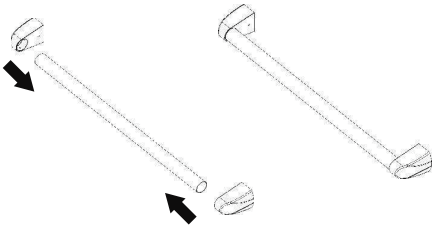

3 Lay the door handle against to the oven door and fit it on the connection part, and use the wrench to get the door handle holder tight;

4 Use the wrench to tighten the door handle holders.

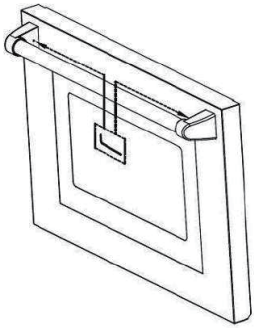

5 Check ifthe oven door handle is level and stable.

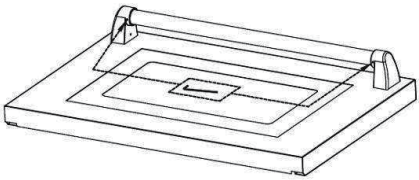

REMOVING THE HANDLE

1. Locate the set screws for mounting fastener on the handle end caps.

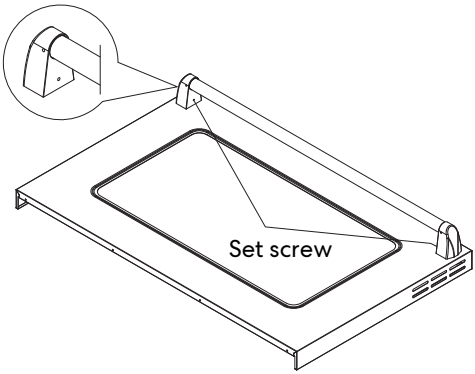

2. Loosen the set screw on one end with the Hex key while supporting the handle. Do not remove the set screw from the handle end cap.

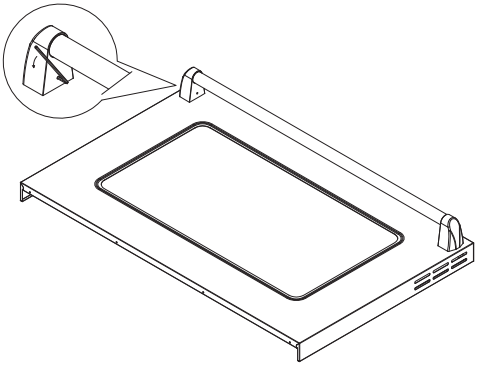

3. Keep supporting the handle while loosening the set screw on the other handle end cap.

4. Remove the handle from the mounting fasteners on the door and set aside.

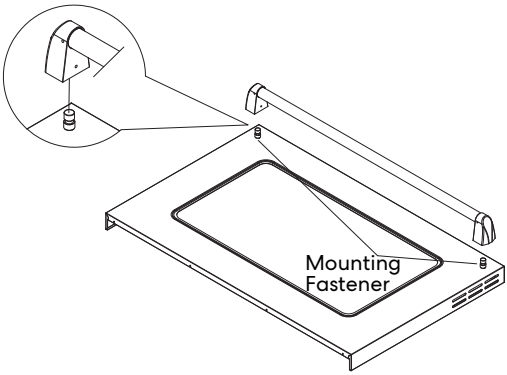

REMOVING/ASSEMBLING OVEN DOOR

For normal range use, it is not suggested to remove the oven door. However, if removal is necessary, make sure the oven is off and cool.

Note:

- The oven door is heavy.
- If door is removed, confirm that door operates correctly and seals properly when reinstalled. If door gasket does not seal completely, heat escaping from around doors could ignite cabinetry.

REMOVING DOOR

1. Fully open the oven door.

2. Unlock the hinge locks on both sides, rotating them as far toward the open door frame as they will go.

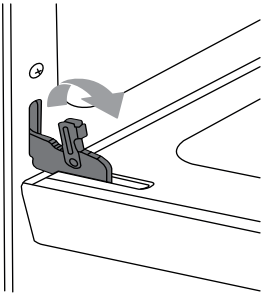

3. Firmly grasp both sides of the door.

4. Close the door to the removal position, which is approximately five degrees or 2-3 inches from being fully closed. If the position is correct, the hinge arms will move freely.

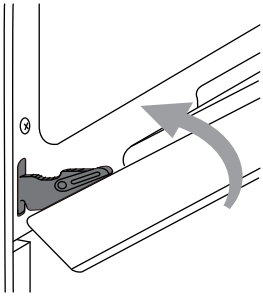

5. Lift door up and out until the hinge arms are clear of the slots.

   IMPORTANT: Do not lift door by door handle.

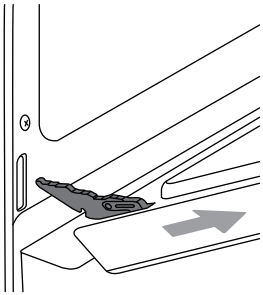

ASSEMBLING DOOR

1. Firmly grasp both sides of the door.

2. With the door at the same angle as the removal position, which is approximately five degrees or 2-3 inches from being fully closed, seat the indentation of the hinge arms into the bottom edge of the hinge slots. The notch in the hinge arms must be fully seated into the bottom edge of the slots.

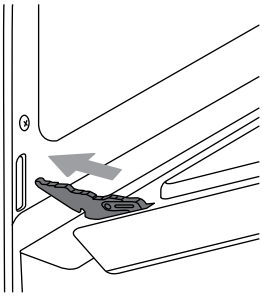

   IMPORTANT: Do not lift door by door handle.

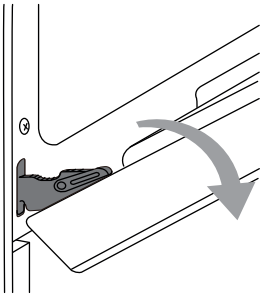

3. Open the door fully. If the door will not open fully, the indentation is not seated correctly in the bottom edge of the slots.

4. Lock the hinge locks, rotating them back toward the slots in the oven frame until they lock.

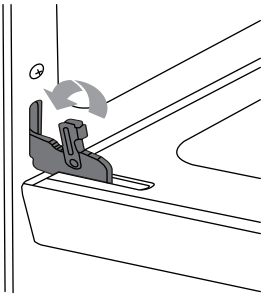

5. Close the oven door. Check that the door is free to open and close and is level while closed.

REMOVING/ASSEMBLING STORAGE DRAWER

For normal range use, it is not suggested to remove the storage drawer. Most cleaning can be done with the drawer in place. However, if removal is necessary, make sure the drawer is empty.

REMOVING DRAWER

1. Fully open the drawer.

2. Carefully lift the front end of the drawer and pull the drawer away from the range.

ASSEMBLING DRAWER

1. Tilt the front end of the drawer up.

2. Align and insert the rear wheel on each side of the drawer onto the glides on the range.

3. Carefully lower the front end of the drawer and push the drawer into the range.

4. Open and close the drawer to ensure it is properly installed.

COMPLETE INSTALLATION

PLACEMENT AND LEVELING RANGE

⚠ WARNING

Electrical Shock Hazard

- Remove house fuse or open circuit breaker to disconnect power before servicing.
- This appliance must be properly grounded.
- Do not use an adapter or an extension cord.
- Failure to do so can result in death, fire, or electrical shock.

⚠ WARNING

Excessive Weight Hazard

- Use two or more people to move and install oven. Failure to do so can result in back or other injury.

⚠ CAUTION

Laceration, Foreign Object, Crush Hazard

- When installing, moving, or servicing any appliance, wear proper protective equipment, including cut resistant gloves, steel-toed shoes, and safety glasses.

IMPORTANT:

- Do not lift by the oven door handle or control knobs. Push, pull, or lift only on the body or structural areas, such as oven, oven face, or back corners of range.
- Do not move unit by pushing or pulling on the door or control panel. Grasp the left/right door area to push the unit.

- Move range by lifting, not sliding, to prevent damage to floors.
- Use a belt when moving the range to prevent damaging the floor, or use cardboard, plywood, or stiff plastic to protect floors if sliding is necessary.
- Be careful not to pinch or kink the electrical connection. If unit does not move in smoothly, check for obstructions. Do not attempt to force the unit into position.

Getting the unit properly placed in the installation space and level may require multiple attempts. It is recommended to measure and adjust leveling legs carefully before placing into the installation space, as the leveling legs may be difficult to adjust once the range is in its final position.

1. Measure the distance from the top of the countertop to the floor at all four corners of the installation space.

2. While range is still positioned outside the installation space, measure the distance from the top of the cooktop to the bottom of each leveling leg.
   - If this distance does not match the distance measured at the corresponding corner of the installation space, use a wrench or pliers to loosen and adjust the leveling legs to the correct height.

Note:

- Height adjustment can be made when range is standing. Tilt the range back to adjust the front legs, and then tilt forward to adjust the rear legs.
- The leveling legs can be loosened up to a maximum of 1" (2.6 cm).

3. When the range is at the correct height, check and make sure that there is minimum clearance of 11/16" (1.8 cm) under the range for the anti-tip bracket.

4. Check that all range controls are in the OFF position. Plug power cord into a grounded outlet or connect conduit to a grounded junction box.

5. Using 2 or more people, gently move range into its final location and make sure the rear leveling leg is engaged in the slot of the anti-tip bracket.

Note:

- Be careful not to damage countertops, floor, or appliance when moving.
- Check to ensure the electrical cord is not pinched or kinked.

6. Place level diagonally on the oven bottom or oven rack, and check with the level in each diagonal direction. Adjust the leveling legs as necessary.
   - If range is not level, use a wrench or pliers to adjust leveling legs up or down until the range is level.

Note:

- The range must be level for optimum cooking and baking performance.

7. Reassemble oven door and storage drawer and insert oven racks if they were previously removed. See "Removing/Assembling Oven Door" and "Removing/Assembling Storage Drawer" sections.

VERIFY ANTI-TIP BRACKET ENGAGEMENT

Do not operate the range without anti-tip bracket installed and engaged.

IMPORTANT: If the range is moved from the final location for any reason, always verify anti-tip bracket engagement again.

1. Place the outside of your foot against the bottom of the front panel to keep the range from moving, and then grasp the back of the range as shown.

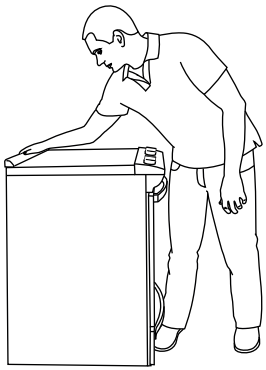

2. Carefully and slowly attempt to tilt the range forward.
   - If you encounter immediate resistance, the rear foot is engaged in the anti-tip bracket. Verification is completed. Skip the steps below.
   - If the rear of the range lifts more than 1/2" (1.3 cm) off the floor without resistance, stop tilting the range and lower it gently back to the floor. The rear range foot is not engaged in the anti-tip bracket. Proceed to Steps 3, 4, and 5.

   IMPORTANT: If there is a snapping or popping sound when tilting the range, the range may not be fully engaged in the anti-tip bracket. Check to see if there are obstructions keeping the range from sliding to the wall or keeping the rear range foot from sliding into the bracket. Verify that the bracket is held securely in place by the mounting screws.

3. Slide the range forward, and verify that the anti-tip bracket is securely attached to the floor or wall.

4. Slide range back so the rear range foot is inserted into the slot of the anti-tip bracket.

5. Repeat steps 1 and 2 to ensure that the rear range foot is engaged in the anti-tip bracket.
   - If the rear of the range lifts more than 1/2" (1.3 cm) off the floor without resistance, the anti-tip bracket may not be installed correctly. Please reference the contact information at the end of this manual to contact service.

CHECKING OPERATION OF THE SURFACE HEATING ELEMENTS

IMPORTANT:

- Check that all packing material and tape have been removed. Failure to remove these materials could result in damage to the appliance once the appliance has been turned on and surfaces have heated.
- Be sure power is in service.

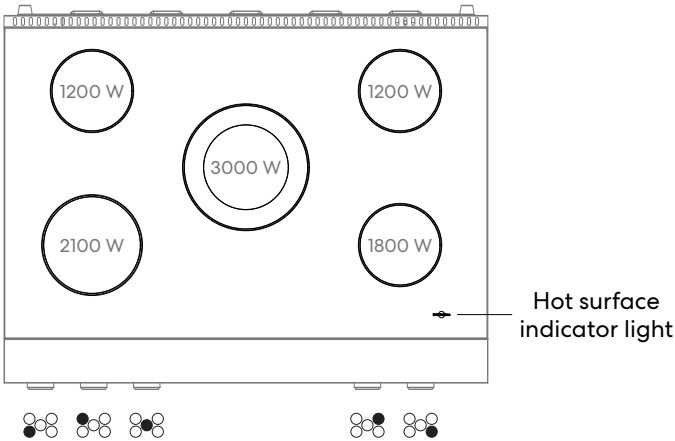

DUAL SURFACE HEATING ELEMENTS

- Turn each knob to each marking position to check that the surface heating elements are working properly.
  - Single-ring: only the smaller inner heating element is powered.
  - Double-ring: both inner and outer heating elements are powered.

  The elements should glow red and radiate heat, and they should cycle on and off periodically.

STANDARD SURFACE HEATING ELEMENTS

- Turn each knob to the "Hi" position to check that the surface heating elements are working properly.

  The elements should glow red and radiate heat, and they should cycle on and off periodically even when the knob is in the "Hi" position.

Note:

- The hot surface indicator light on the surface glows and indicates that cooktop element is still hot. When the hot surface indicator turns off, the glass surface may still feel slightly hot to touch.

CHECK OPERATION OF THE OVEN

IMPORTANT:

- Ensure all packaging is removed, and oven is empty except for oven rack(s).
- Be sure power is in service.

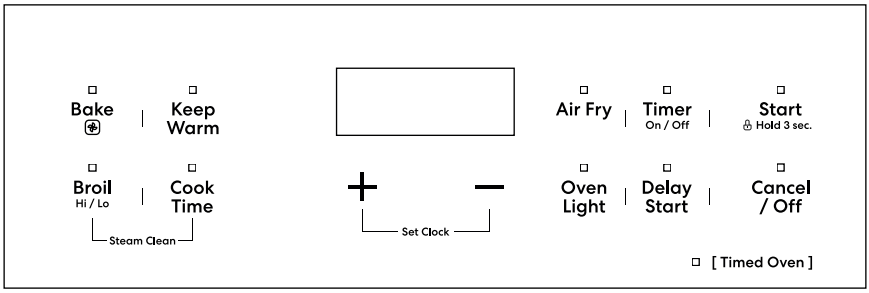

To Check Broil Heating Element:

1. Keep the oven door closed.

2. Press **Broil** once to select High Broil mode.

3. Press **Start**.

   The oven starts to preheat, and HI remains in the display.

4. After several minutes, the upper broil heating element can be visually seen to start glowing red.
   - If you do not see heating element glowing red, open the oven door temporarily. Without touching the oven components, confirm that heat can be felt radiating from the oven top.
   - If you do not feel heat, turn off the oven and contact a qualified technician.

5. Press **Cancel/Off** to stop High Broil mode.

To Check Bake Heating Element:

1. Keep the oven door closed.

2. Press **Bake** twice to select Convection Bake mode.

   The indicator light above Bake flashes.

3. Press **Start** to select the default temperature.

   --:-- appears in the display, prompting for cooking time to be entered.

4. Press **Start** to skip setting the cook time.

   The oven starts to preheat, and PRE appears in the display.

5. After a couple minutes, open the oven door temporarily. Without touching the oven components, confirm that heat can be felt radiating from the oven bottom and the rear convection fan is operating.
   - If you do not feel heat, turn off the oven and contact a qualified technician.

   Note:
   - If the door is left open too long for over 3 minutes, the cooking mode will be automatically cancelled.

6. Close the oven door. Let the oven run for 10 minutes.
   - (Optional) After preheating is complete, allow oven to run for at least 30 minutes to burn off and remove any manufacturing protection oil, dust or impurities.

7. Press **Cancel/Off** to stop Convection Bake mode.