WATER CREATION

# MODEL: ABERDEEN72

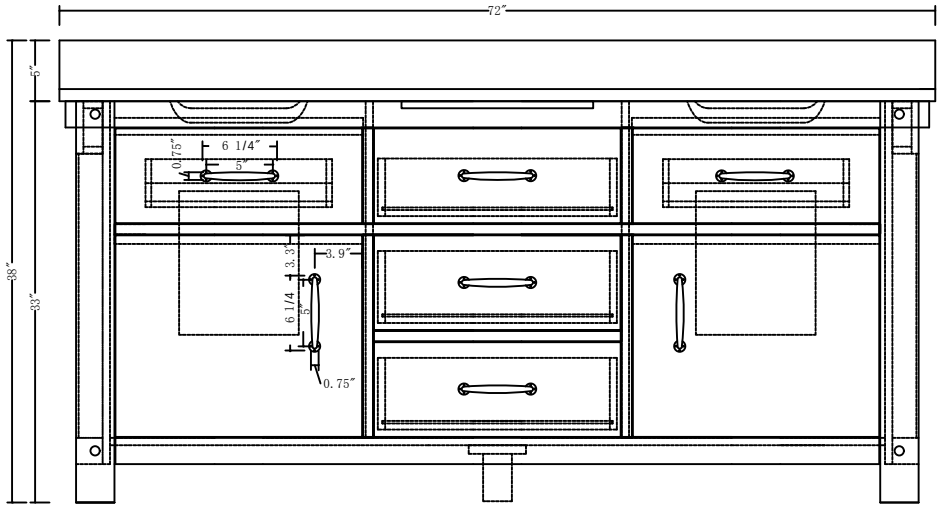


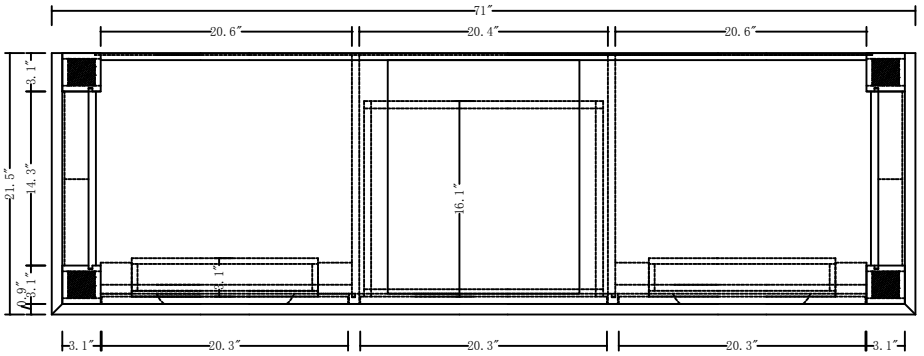


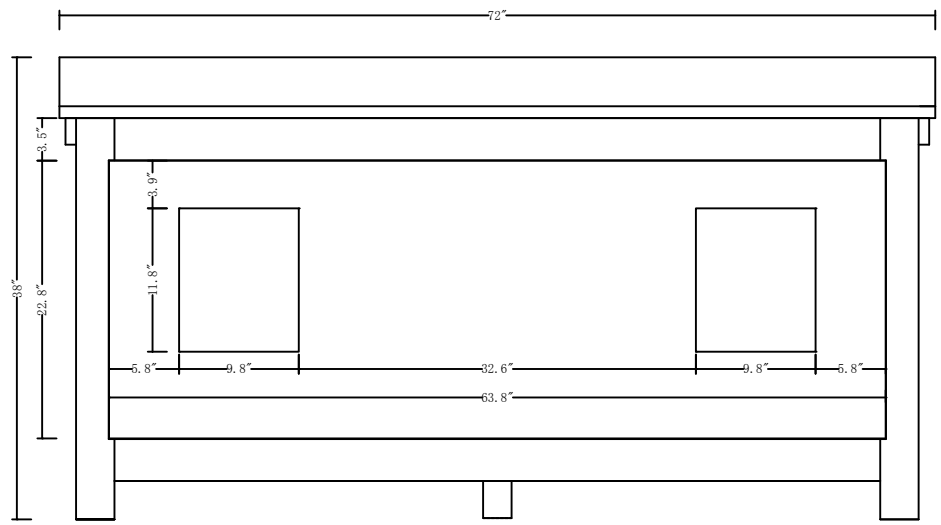


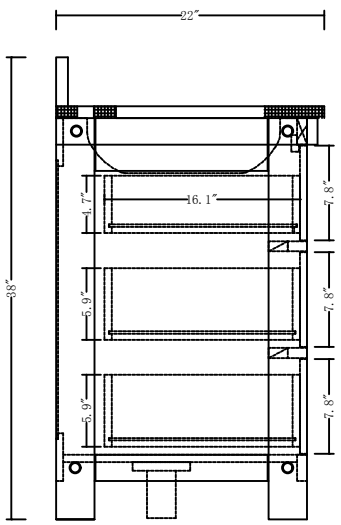


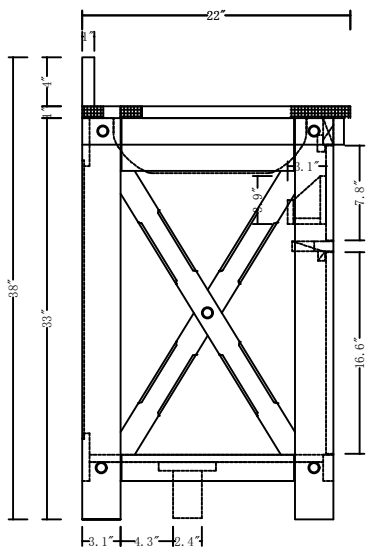

WATER CREATION

# MODEL: ABERDEEN72

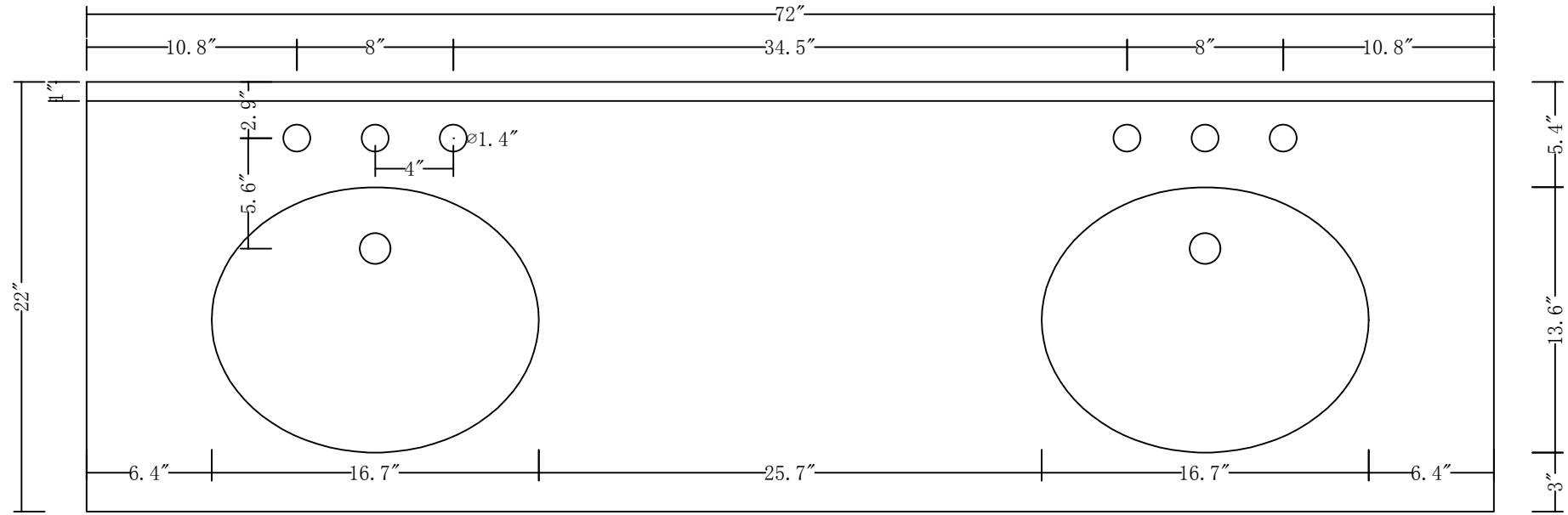


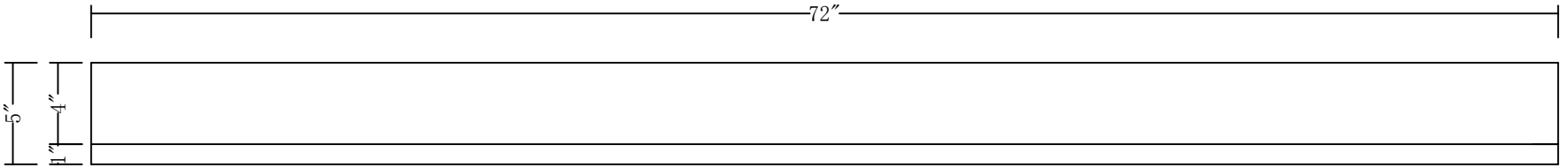

WATER CREATION

**MODEL: ABERDEEN72**

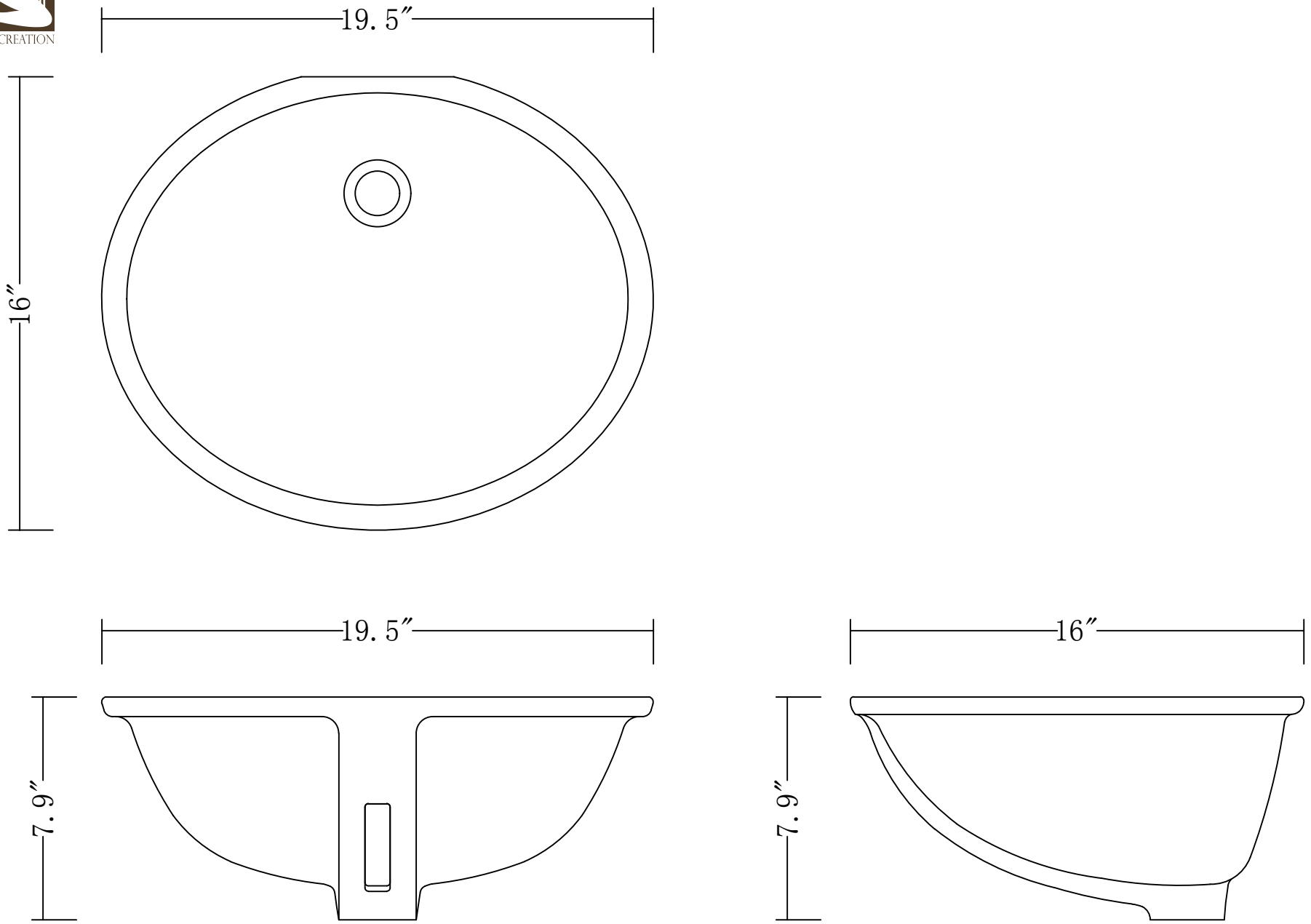

WATER CREATION

# MODEL: F2-0012

