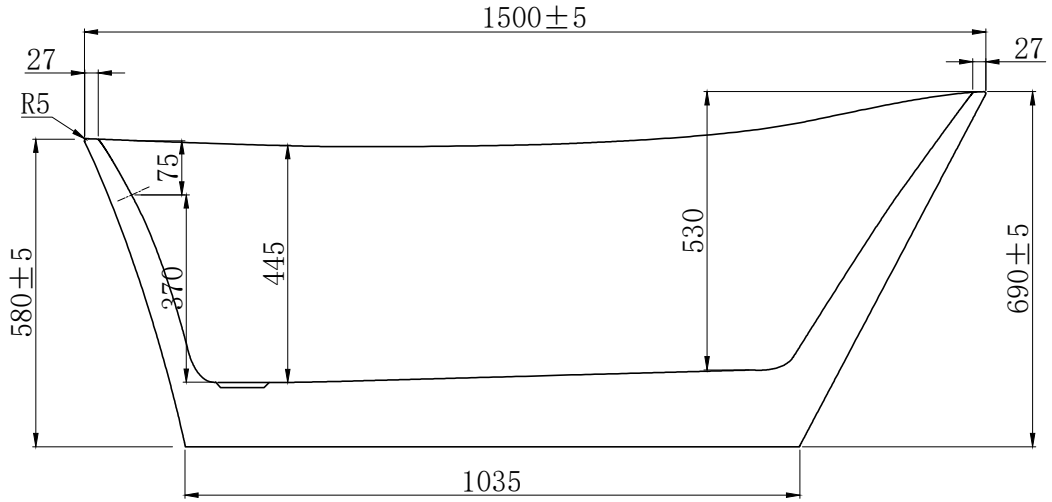

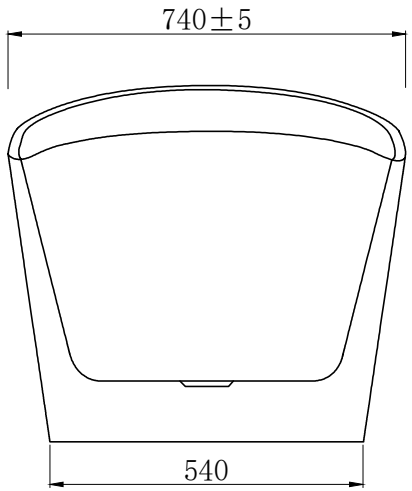

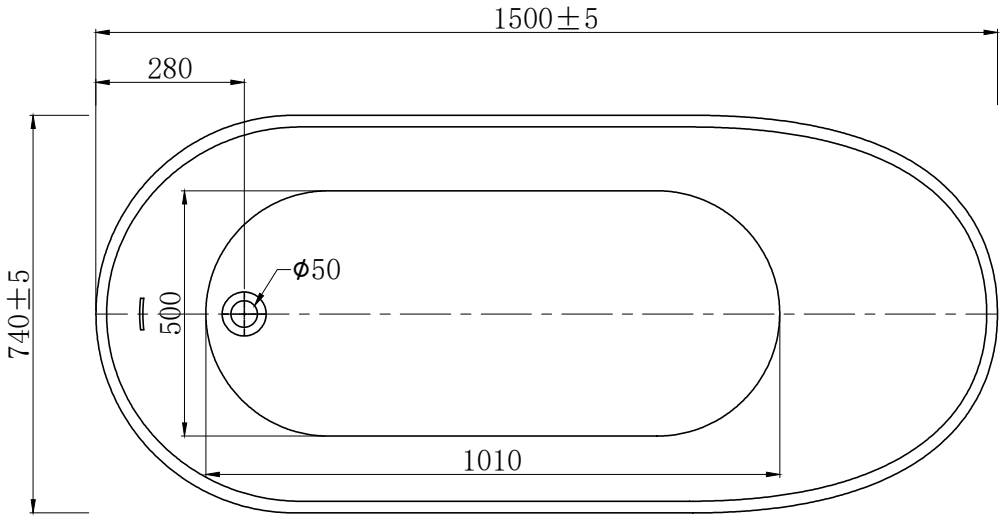

MODEL:329-1500
SIZE:1500x740x690
FOOT:4
N.W.:35.7kg
CUB.:62gal