F.B.G. PRODUCT DATA SHEET

VENDOR INFORMATION:
LOCATION - NAME

HARDWARE NEEDED?

DES. ID SPINDLE COUNT

DOMESTIC -
IMPORT X
NUMBER -

Y X
N -

ISSUE
DATE

DESC. BED (HEADBOARD)

FINISH(S): MATTE BLACK
FINISH PROCESS: ONE STEP POWDER

FINISH(S): VANILLA
FINISH PROCESS: ONE STEP POWDER

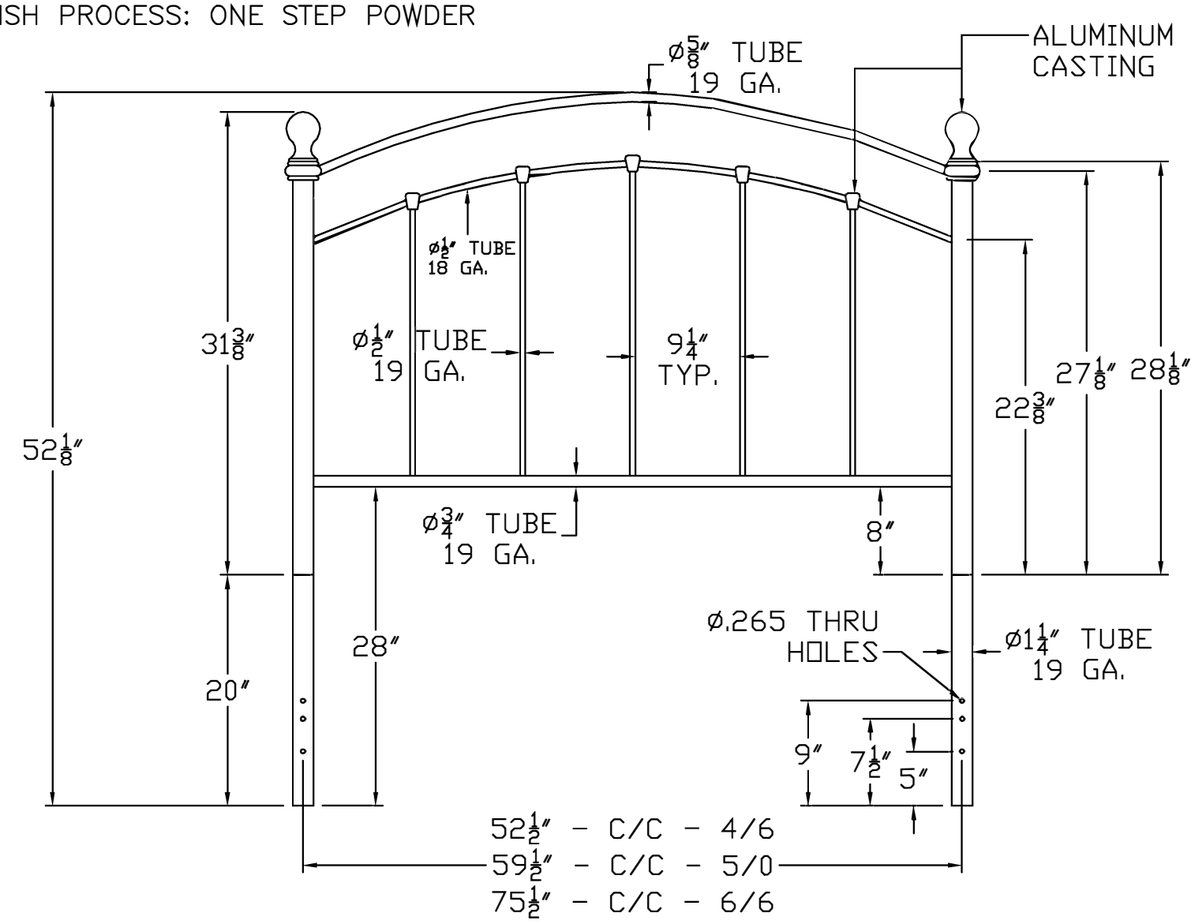

USE THIS AS REFERENCE ONLY

#	DESCRIPTION
—	HARDWARE BAG #352301 BED (BLACK)
—	(4) 1/4-20 2 COUNTERSUNK ALLEN HEAD SCREW
—	(4) 1/4-20 1 FLAT ALLEN HEAD SCREW
—	(8) 5/8" OD METAL WASHER
—	(4) 1/4-20 HEX NUT
—	ALLEN WRENCH
—	-
—	HARDWARE BAG #352302 HEADBOARD (BLACK)
—	(4) 1/4-20 2 COUNTERSUNK ALLEN HEAD SCREW
—	(4) 5/8" OD METAL WASHER
—	(4) 1/4-20 HEX NUT
—	ALLEN WRENCH
—	—
—	—
—	PLASTIC GLIDE #150940000
—	FINIAL #352303
—	LEG EXT. #352304
—	-
—	—
—	—
—	—
—	—
—	—

ISU	DATE	REVISION
B	11-5-06	ADD CARTON DIMENSIONS
C	06-21-07	ADD NEW FINISH
-	-	-
-	-	-

	HEIGHT		WIDTH		DEPTH	WEIGHT (LBS.)				# OF CTNS		CARTON DIM'S		CU FT.		U.P.S.	
						PACKED		UNPACKED									
SIZE	FTBD	HDBD	FTBD	HDBD	D-BED	BED	HB	BED	-	BED	HB	BED	HEADBOARD	BED	HDBD	Y	N
3/3	-	-	-	-	-	-	-	-	-	-	-	-	-	-	-	-	-
4/6	31 3/8	52 1/8	54 1/2	54 1/2	-	28	18	-	-	1	1	58" X 35" X 4"	57 3/4" X 35 1/4" X 3"	4.70	3.53	-	X
5/0	31 3/8	52 1/8	61 1/2	61 1/2	-	30	19	-	-	1	1	65" X 35" X 4"	64 1/2 X 35 1/4" X 3"	5.26	3.94	-	X
6/6	31 3/8	52 1/8	77 1/2	77 1/2	-	35	23	-	-	1	1	81" X 35" X 4"	80 1/2" X 35" X 3"	6.56	4.89	-	X
-	-	-	-	-	-	-	-	-	-	-	-	-	-	-	-	-	-
-	-	-	-	-	-	-	-	-	-	-	-	-	-	-	-	-	-

F.B.G. PRODUCT DATA SHEET

DESC. BED (FOOTBOARD)

DOMESTIC -
IMPORT X

VENDOR INFORMATION:
LOCATION
NAME ID
NUMBER -

HARDWARE NEEDED?
Y X
N -

DES. ID SPINDLE COUNT

ISSUE
DATE

FINISH(S): MATTE BLACK
FINISH PROCESS: ONE STEP POWDER

FINISH(S): VANILLA
FINISH PROCESS: ONE STEP POWDER

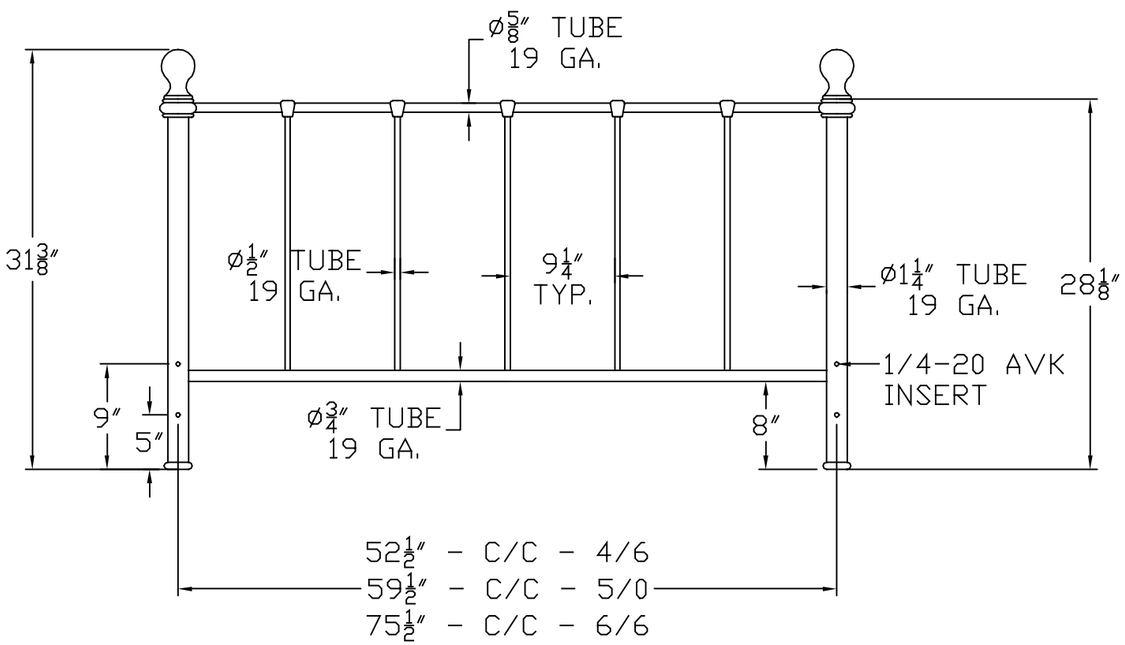

USE THIS AS REFERENCE ONLY

#	DESCRIPTION
—	HARDWARE BAG #352301 BED (BLACK)
—	(4) 1/4-20 2 COUNTERSUNK ALLEN HEAD SCREW
—	(4) 1/4-20 1 FLAT ALLEN HEAD SCREW
—	(8) 5/8" OD METAL WASHER
—	(4) 1/4-20 HEX NUT
—	ALLEN WRENCH
—	-
—	HARDWARE BAG #352302 HEADBOARD (BLACK)
—	(4) 1/4-20 2 COUNTERSUNK ALLEN HEAD SCREW
—	(4) 5/8" OD METAL WASHER
—	(4) 1/4-20 HEX NUT
—	ALLEN WRENCH
—	—
—	—
—	PLASTIC GLIDE #150940000
—	FINIAL #352303
—	LEG EXT. #352304
—	-
—	—
—	—
—	—
—	—
—	—
—	

ISU	DATE	REVISION
B	11-5-06	ADD CARTON DIMENSIONS
C	06-21-07	ADD NEW FINISH
-	-	-
-	-	-

HEIGHT			WIDTH		DEPTH	WEIGHT (LBS.)				# OF CTNS		CARTON DIM'S		CU FT.		U.P.S.	
						PACKED		UNPACKED									
SIZE	FTBD	HDBD	FTBD	HDBD	D-BED	BED	HB	BED	-	BED	HB	BED	HEADBOARD	BED	HDBD	Y	N
3/3	-	-	-	-	-	-	-	-	-	-	-	-	-	-	-	-	-
4/6	31 3/8	52 1/8	54 1/2	54 1/2	-	28	18	-	-	1	1	58" X 35" X 4"	57 3/4" X 35 1/4" X 3"	4.70	3.53	-	X
5/0	31 3/8	52 1/8	61 1/2	61 1/2	-	30	19	-	-	1	1	65" X 35" X 4"	64 1/2 X 35 1/4" X 3"	5.26	3.94	-	X
6/6	31 3/8	52 1/8	77 1/2	77 1/2	-	35	23	-	-	1	1	81" X 35" X 4"	80 1/2" X 35" X 3"	6.56	4.89	-	X
-	-	-	-	-	-	-	-	-	-	-	-	-	-	-	-	-	-
-	-	-	-	-	-	-	-	-	-	-	-	-	-	-	-	-	-

F.B.G. PRODUCT DATA SHEET

DESC. TWIN BED (HB)

DOMESTIC -
IMPORT X

VENDOR INFORMATION:
LOCATION
NAME ID
NUMBER -

HARDWARE NEEDED?
Y X
N -

DES. ID SPINDLE COUNT

ISSUE
DATE

FINISH(S): MATTE BLACK
FINISH PROCESS: ONE STEP POWDER
FINISH(S): VANILLA
FINISH PROCESS: ONE STEP POWDER

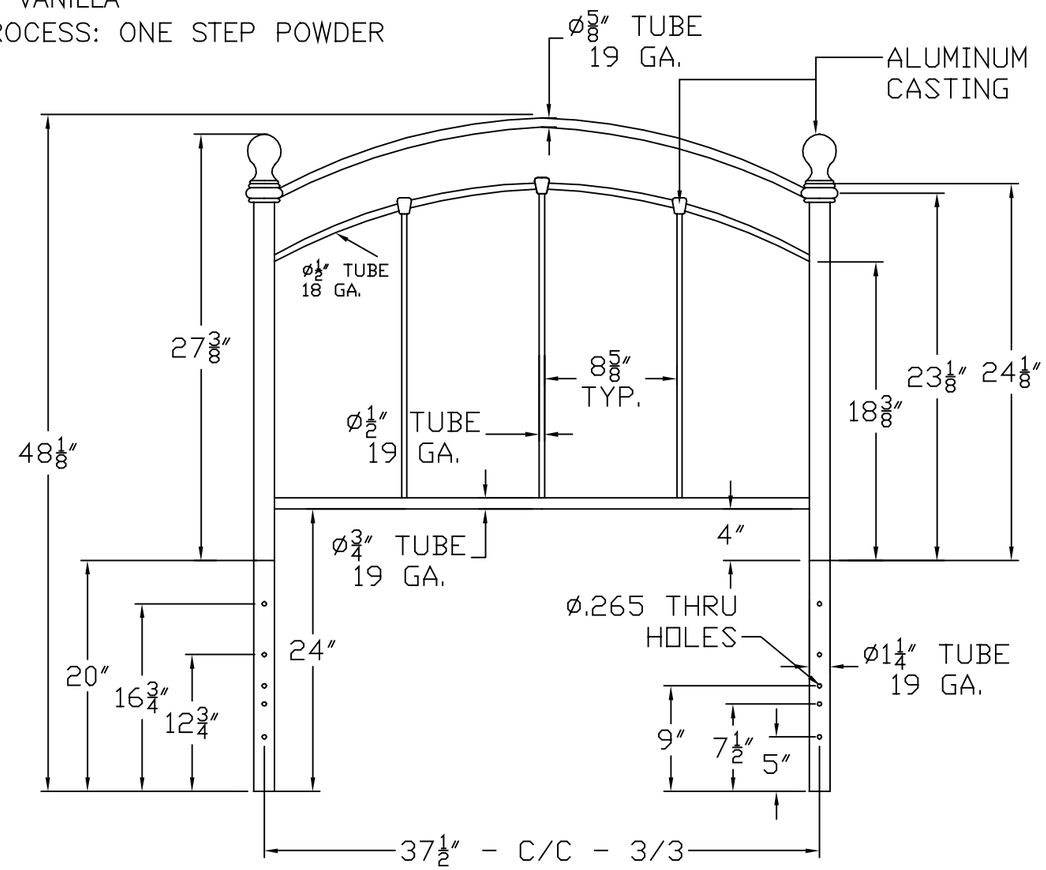

USE THIS AS REFERENCE ONLY

#	DESCRIPTION
—	HARDWARE BAG #352301 BED (BLACK)
—	(4) 1/4–20 2 COUNTERSUNK ALLEN HEAD SCREW
—	(4) 1/4–20 1 FLAT ALLEN HEAD SCREW
—	(8) 5/8" OD METAL WASHER
—	(4) 1/4–20 HEX NUT
—	ALLEN WRENCH
—	–
—	HARDWARE BAG #352302 HEADBOARD (BLACK)
—	(4) 1/4–20 2 COUNTERSUNK ALLEN HEAD SCREW
—	(4) 5/8" OD METAL WASHER
—	(4) 1/4–20 HEX NUT
—	ALLEN WRENCH
—	—
—	—
—	PLASTIC GLIDE #150940000
—	FINIAL #352303
—	LEG EXT. #352404
—	–
—	—
—	—
—	—
—	—
—	—

ISU	DATE	REVISION
B	11–5–06	ADD CARTON INFORMATION
C	06–21–07	ADD NEW FINISH
–	–	–
–	–	–

HEIGHT			WIDTH		DEPTH	WEIGHT (LBS.)				# OF CTNS		CARTON DIM'S		CU FT.		U.P.S.	
						PACKED		UNPACKED									
SIZE	FTBD	HDBD	FTBD	HDBD	D–BED	BED	HB	BED	–	BED	HB	BED	HEADBOARD	BED	HDBD	Y	N
3/3	31 3/8	48 1/8	39 1/2	39 1/2	–	23	14	–	–	1	1	43″ X 31 1/2″ X 4″	42 1/2″ X 31 1/2″ X 3″	3.14	2.31	X	–
4/6	–	–	–	–	–	–	–	–	–	–	–	–	–	–	–	–	–
5/0	–	–	–	–	–	–	–	–	–	–	–	–	–	–	–	–	–
6/6	–	–	–	–	–	–	–	–	–	–	–	–	–	–	–	–	–
–	–	–	–	–	–	–	–	–	–	–	–	–	–	–	–	–	–
–	–	–	–	–	–	–	–	–	–	–	–	–	–	–	–	–	–

F.B.G. PRODUCT DATA SHEET

DESC. TWIN BED (FT)

DOMESTIC -
IMPORT X

VENDOR INFORMATION:
LOCATION
NAME ID
NUMBER -

HARDWARE NEEDED?
Y X
N -

DES. ID SPINDLE COUNT

ISSUE
DATE

FINISH(S): MATTE BLACK
FINISH PROCESS: ONE STEP POWDER
FINISH(S): VANILLA
FINISH PROCESS: ONE STEP POWDER

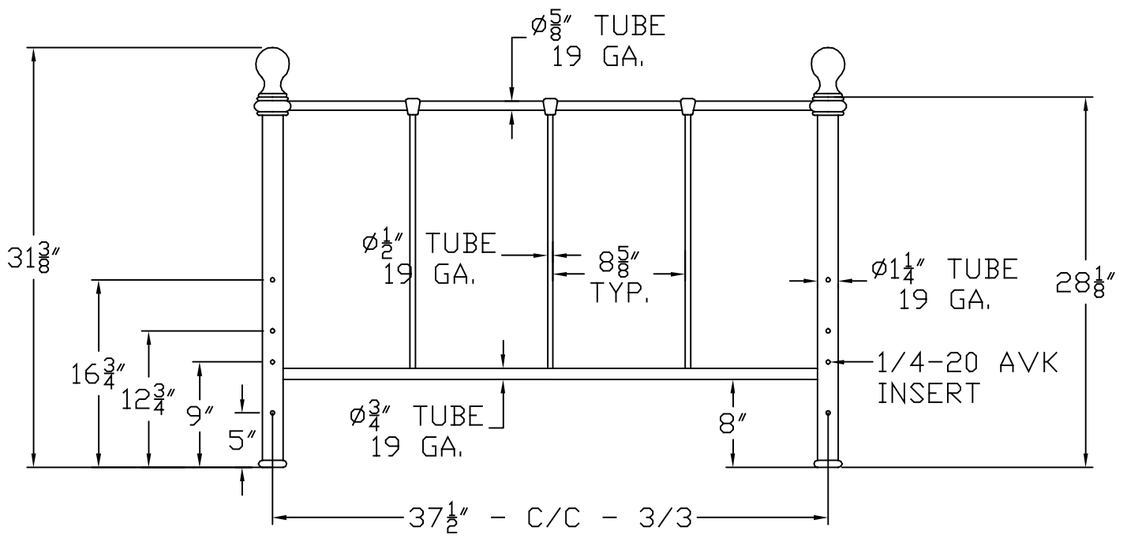

USE THIS AS REFERENCE ONLY

#	DESCRIPTION
—	HARDWARE BAG #352301 BED (BLACK)
—	(4) 1/4-20 2 COUNTERSUNK ALLEN HEAD SCREW
—	(4) 1/4-20 1 FLAT ALLEN HEAD SCREW
—	(8) 5/8" OD METAL WASHER
—	(4) 1/4-20 HEX NUT
—	ALLEN WRENCH
—	–
—	HARDWARE BAG #352302 HEADBOARD (BLACK)
—	(4) 1/4-20 2 COUNTERSUNK ALLEN HEAD SCREW
—	(4) 5/8" OD METAL WASHER
—	(4) 1/4-20 HEX NUT
—	ALLEN WRENCH
—	—
—	—
—	PLASTIC GLIDE #150940000
—	FINIAL #352303
—	LEG EXT. #352404
—	–
—	—
—	—
—	—
—	—
—	—
—	—

ISU	DATE	REVISION
B	11-5-06	ADD CARTON INFORMATION
C	06-21-07	ADD NEW FINISH
–	–	–
–	–	–

HEIGHT			WIDTH		DEPTH	WEIGHT (LBS.)				# OF CTNS		CARTON DIM'S		CU FT.		U.P.S.	
						PACKED		UNPACKED									
SIZE	FTBD	HDBD	FTBD	HDBD	D-BED	BED	HB	BED	–	BED	HB	BED	HEADBOARD	BED	HDBD	Y	N
3/3	31 3/8	48 1/8	39 1/2	39 1/2	–	23	14	–	–	1	1	43" X 31 1/2" X 4"	42 1/2" X 31 1/2" X 3"	3.14	2.31	X	–
4/6	–	–	–	–	–	–	–	–	–	–	–	–	–	–	–	–	–
5/0	–	–	–	–	–	–	–	–	–	–	–	–	–	–	–	–	–
6/6	–	–	–	–	–	–	–	–	–	–	–	–	–	–	–	–	–
–	–	–	–	–	–	–	–	–	–	–	–	–	–	–	–	–	–
–	–	–	–	–	–	–	–	–	–	–	–	–	–	–	–	–	–

F.B.G. PRODUCT DATA SHEET

DESC. TWIN HEADBOARD

DOMESTIC -
IMPORT X

VENDOR INFORMATION:
LOCATION
NAME ID
NUMBER -

HARDWARE NEEDED?
Y X
N -

DES. ID SPINDLE COUNT
ISSUE
DATE

FINISH(S): MATTE BLACK
FINISH PROCESS: ONE STEP POWDER
FINISH(S): VANILLA
FINISH PROCESS: ONE STEP POWDER

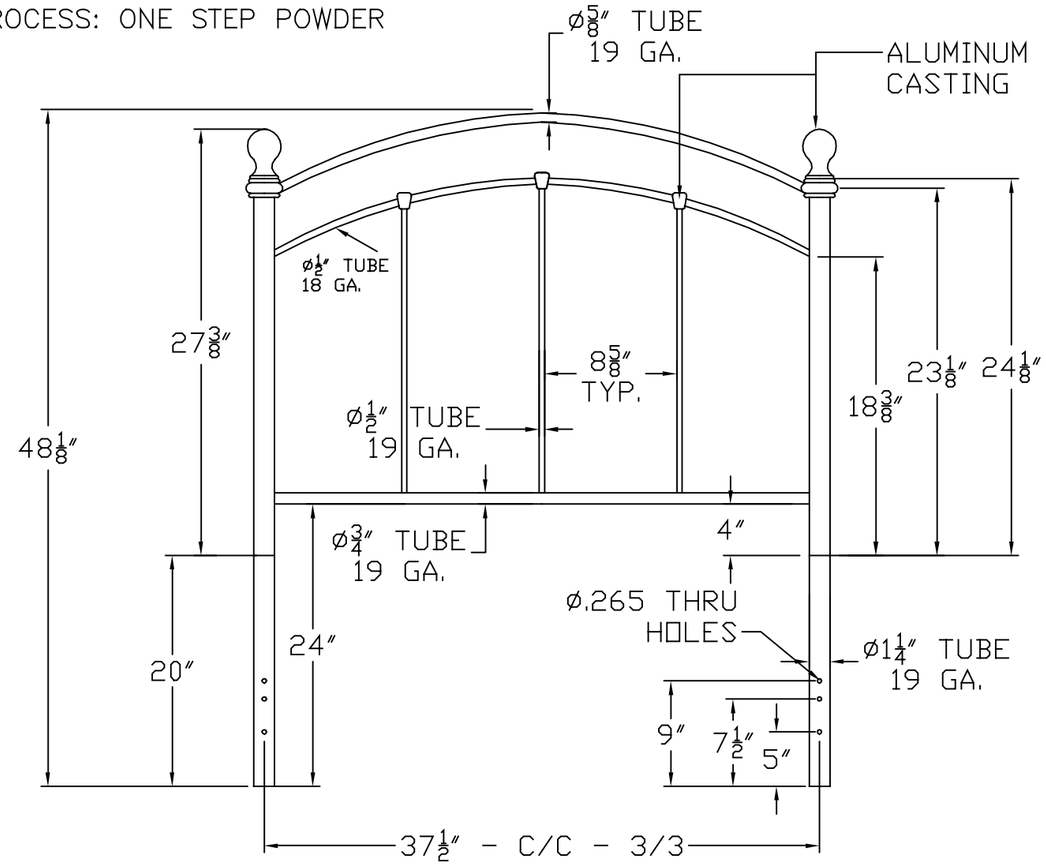

USE THIS AS REFERENCE ONLY

#	DESCRIPTION
—	HARDWARE BAG #352301 BED (BLACK)
—	(4) 1/4–20 2 COUNTERSUNK ALLEN HEAD SCREW
—	(4) 1/4–20 1 FLAT ALLEN HEAD SCREW
—	(8) 5/8" OD METAL WASHER
—	(4) 1/4–20 HEX NUT
—	ALLEN WRENCH
—	–
—	HARDWARE BAG #352302 HEADBOARD (BLACK)
—	(4) 1/4–20 2 COUNTERSUNK ALLEN HEAD SCREW
—	(4) 5/8" OD METAL WASHER
—	(4) 1/4–20 HEX NUT
—	ALLEN WRENCH
—	—
—	—
—	PLASTIC GLIDE #150940000
—	FINIAL #352303
—	LEG EXT. #352304
—	–
—	—
—	—
—	—
—	—
—	—

ISU	DATE	REVISION
B	11–5–06	ADD CARTON INFORMATION
C	06–21–07	ADD NEW FINISH
–	–	–
–	–	–

HEIGHT			WIDTH		DEPTH	WEIGHT (LBS.)				# OF CTNS		CARTON DIM'S		CU FT.		U.P.S.	
						PACKED		UNPACKED									
SIZE	FTBD	HDBD	FTBD	HDBD	D–BED	BED	HB	BED	–	BED	HB	BED	HEADBOARD	BED	HDBD	Y	N
3/3	31 3/8	48 1/8	39 1/2	39 1/2	–	23	14	–	–	1	1	43″ X 31 1/2″ X 4″	42 1/2″ X 31 1/2″ X 3″	3.14	2.31	X	–
4/6	–	–	–	–	–	–	–	–	–	–	–	–	–	–	–	–	–
5/0	–	–	–	–	–	–	–	–	–	–	–	–	–	–	–	–	–
6/6	–	–	–	–	–	–	–	–	–	–	–	–	–	–	–	–	–
–	–	–	–	–	–	–	–	–	–	–	–	–	–	–	–	–	–
–	–	–	–	–	–	–	–	–	–	–	–	–	–	–	–	–	–