azzuri
by Avanity

Installation Instructions

AG2502BP-60CH/MB/BN

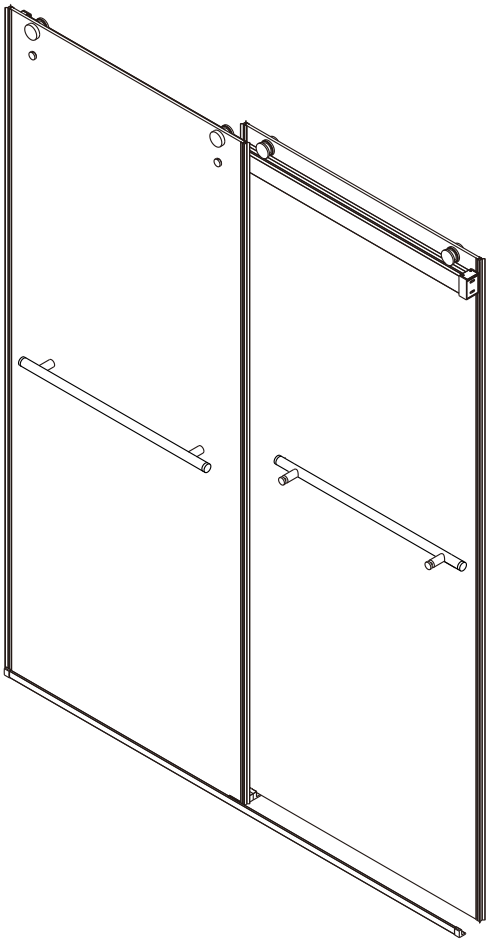

V1-2026-01-16

For customer support, please call Avanity Corporation at 866-522-5578 weekdays 9:00 to 5:00 PST
Pour le support client, s'il vous plaît appelez au 866-522-5578 Avanity Corporation semaine 9:00-5:00 PST

⚠ IMPORTANT SAFETY & INSTALLATION INFORMATION

GENERAL INFORMATION

- Please read all instructions fully before installation.
- This product should be installed by a qualified installer familiar with shower door construction and tempered glass handling.
- The installer is responsible for ensuring correct installation and compliance with all applicable local building and plumbing codes.
- Product specifications, designs, and instructions may be updated without prior notice.

ⓘ Note: All illustrations are for reference only and may not be drawn to scale.

INSTALLATION & HANDLING WARNINGS

- This product contains heavy glass components. Do not attempt to lift or install glass panels alone.
- Always use an assistant and professional-grade glass suction cups when handling glass.
- Do not lean on, apply pressure to, or misuse the glass panels or door.
- Some installations may require drilling into the threshold or base—confirm drilling suitability with the base or flooring manufacturer before proceeding.

TEMPERED GLASS SAFETY WARNING

⚠ **Tempered glass can shatter without warning if damaged, improperly installed, or misused.**

DO NOT:

- ✗ Install glass with chipped corners, cracked edges, or visible damage
- ✗ Install glass that has been dropped or struck against a hard surface
- ✗ Attempt to cut, drill, or modify tempered glass
- ✗ Slam, force, or aggressively operate the door

ALWAYS:

- ✓ Protect glass edges and corners during storage, unpacking, and installation
- ✓ Keep corner protectors in place until final installation
- ✓ Ensure all hardware is properly aligned, tightened, and gasketed
- ✓ Inspect glass and hardware periodically for damage or loosening

⚠ Even minor edge damage can cause glass to shatter immediately or hours or days later.

For customer support, please call Avanity Corporation at 866-522-5578 weekdays 9:00 to 5:00 PST
Pour le support client, s'il vous plaît appelez au 866-522-5578 Avanity Corporation semaine 9:00-5:00 PST

INSTALLER RESPONSIBILITY NOTICE

- Improper installation, loose hardware, or misalignment may place stress on the glass and cause failure.
- Adjustments should be made immediately if misalignment or loose components are detected.
- Extra caution is advised in households with children or elderly users;additional safety measures should be considered.

PRE-INSTALLATION CHECKLIST

Before beginning installation, confirm the following:

- ✓ All parts are present and undamaged
- ✓ Walls are plumb, square, and structurally sound
- ✓ Threshold is level and capable of supporting the product
- ✓ Finished surfaces are protected during installation
- ✓ Proper safety equipment is worn (gloves, safety glasses, footwear)

DISCLAIMER & LIABILITY NOTICE

- Manufacturer is not responsible for damage or injury resulting from improper installation, handling, misuse, or failure to follow instructions.
- Installation of damaged glass voids all warranties and may result in serious injury or property damage.
- This manual must be left with the end user upon completion of installation.

For customer support, please call Avanity Corporation at 866-522-5578 weekdays 9:00 to 5:00 PST
Pour le support client, s'il vous plaît appelez au 866-522-5578 Avanity Corporation semaine 9:00-5:00 PST

Tools

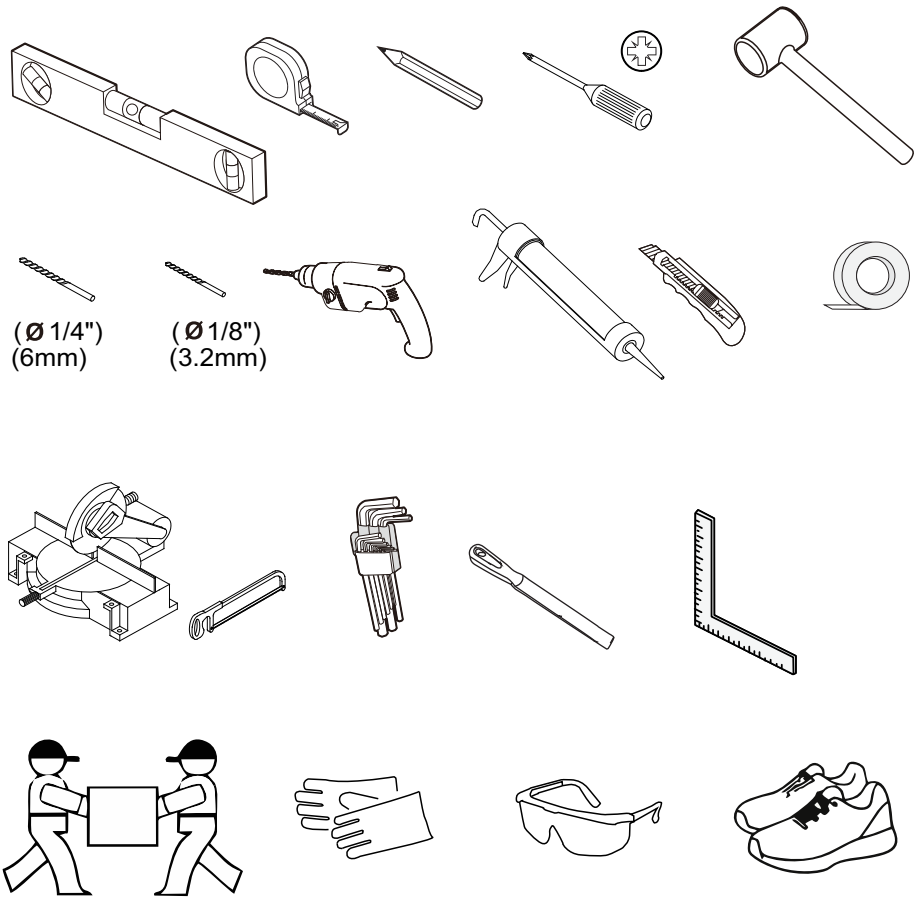

List

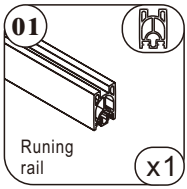
01
Runing rail
x1

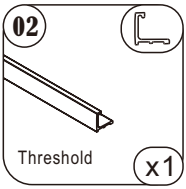
02
Threshold
x1

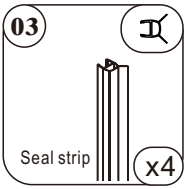
03
Seal strip
x4

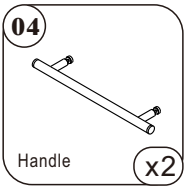
04
Handle
x2

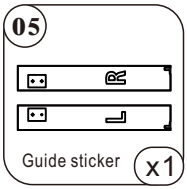
05
Guide sticker
x1

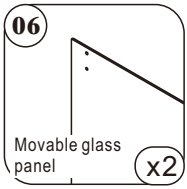
06
Movable glass panel
x2


07
Wallmount bracket
x2

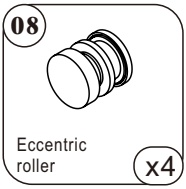
08
Eccentric roller
x4


09
Anti-jump
x4

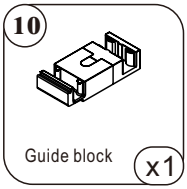
10
Guide block
x1

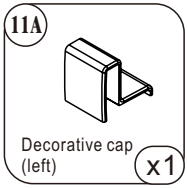
11A
Decorative cap (left)
x1

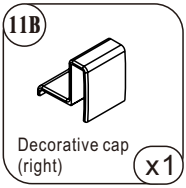
11B
Decorative cap (right)
x1

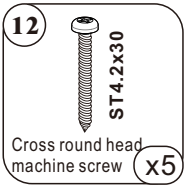
12
ST4.2x30
Cross round head machine screw
x5

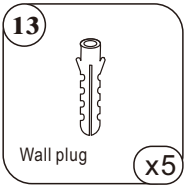
13
Wall plug
x5


14
2.5#
Allen key
x1

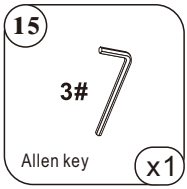
15
3#
Allen key
x1

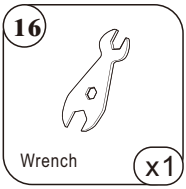
16
Wrench
x1

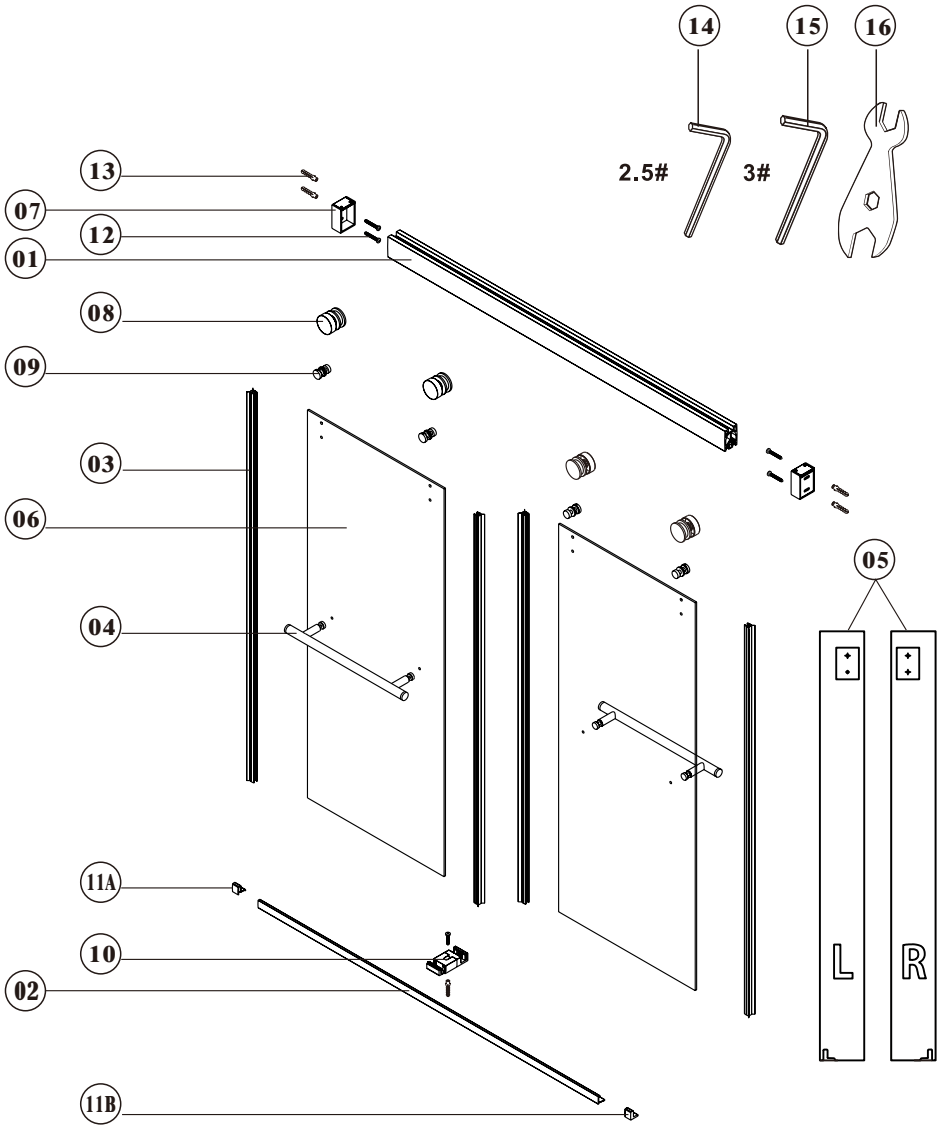

For customer support, please call Avanity Corporation at 866-522-5578 weekdays 9:00 to 5:00 PST
Pour le support client, s'il vous plaît appelez au 866-522-5578 Avanity Corporation semaine 9:00-5:00 PST

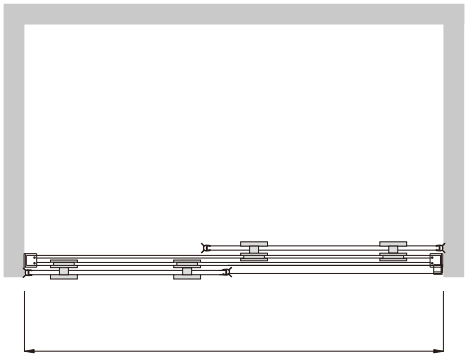

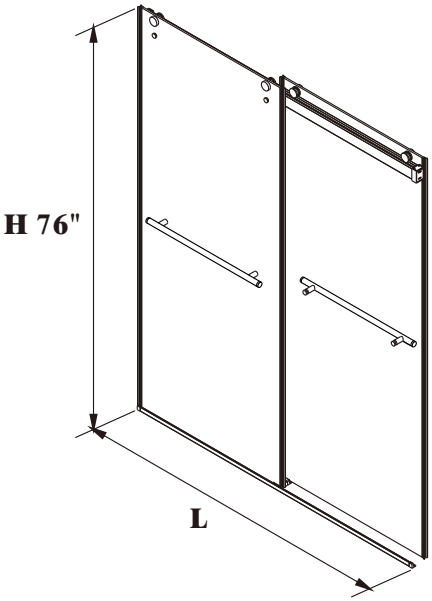

Code	Size	L (Min~Mix)	Colour	Glass
AG2502BP-60CH	60"x76"	56"-60"	Chrome	5/16"-Easy-clean
AG2502BP-60MB	60"x76"	56"-60"	Matt black	5/16"-Easy-clean
AG2502BP-60BN	60"x76"	56"-60"	Brushed nickel	5/16"-Easy-clean

01 Measure the width of the shower door opening at the top, middle, and bottom to ensure the opening dimensions are correct before installation.

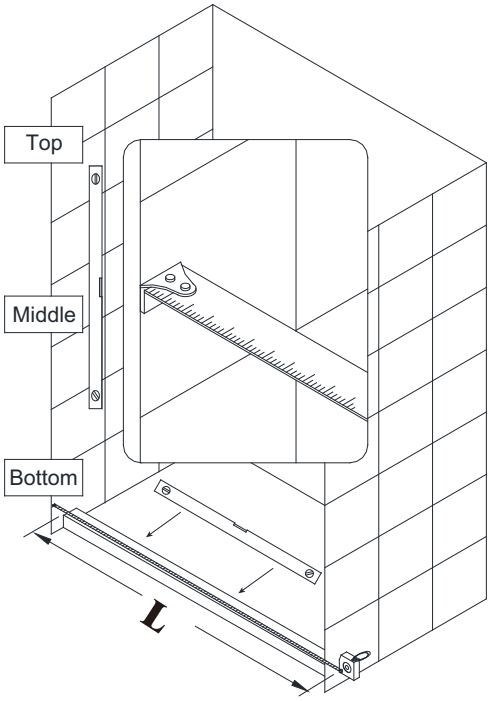

Tools Needed

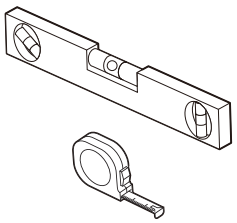

02

Measure the distance L between the two tiled walls.

(01): Calculate the installation dimension of the Running rail as L1 = L - 0.47 ", then cut off the excess length.

(02): Calculate the installation dimension of threshold as L2 = L - 0.1 ", then cut off the excess length.

⚠Prior to cutting, check whether there are any buffer components at the intended cutting position. If yes, adjust the position of the buffer components first before proceeding with the cutting operation.

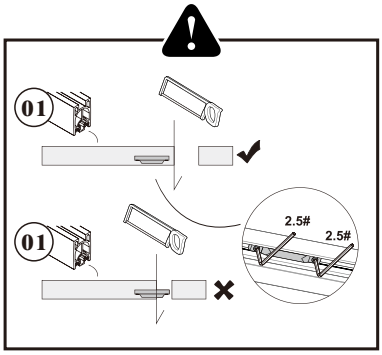

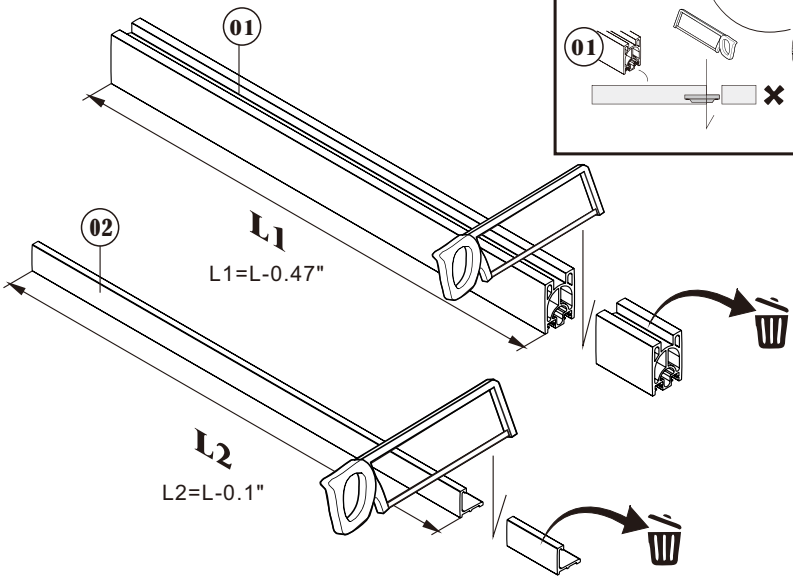

Parts Needed

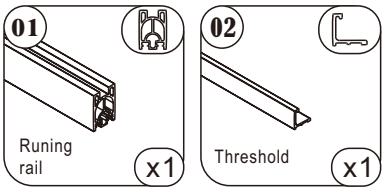

Tools Needed

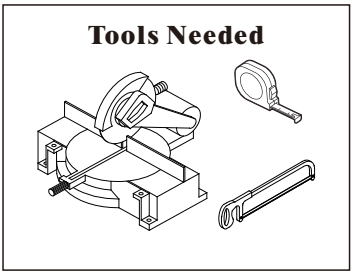

For customer support, please call Avanity Corporation at 866-522-5578 weekdays 9:00 to 5:00 PST
Pour le support client, s'il vous plaît appelez au 866-522-5578 Avanity Corporation semaine 9:00-5:00 PST

03 First, wipe the wall clean. Then, position and level the guide sticker (05) as shown in the illustration, and mark the outline of the bottom slideway.

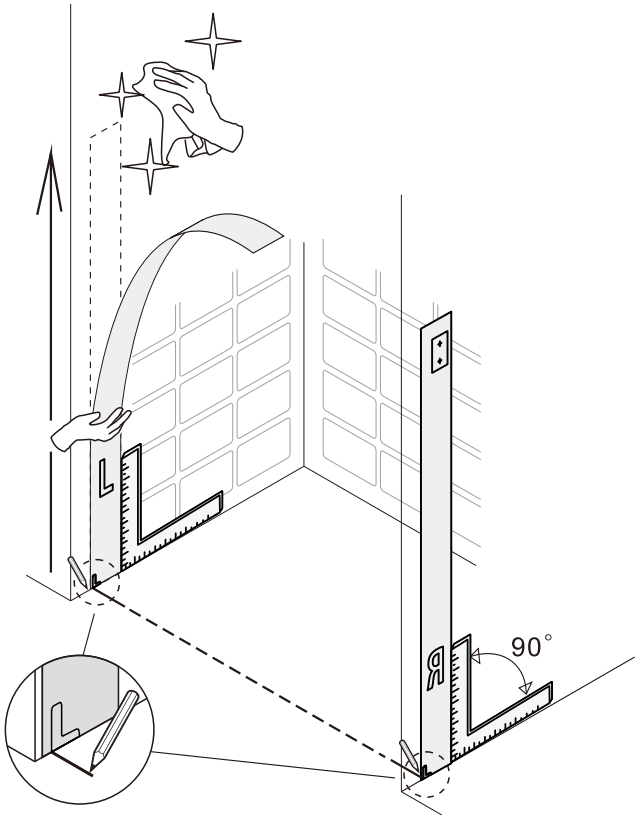

Parts Needed

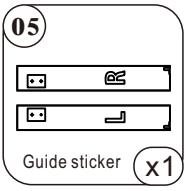

Tools Needed

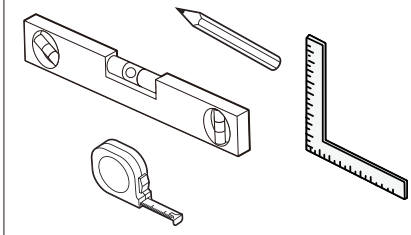

04

Drill pilot holes at the marked locations and remove the guide sticker. Next, use a rubber mallet to insert the wall plugs (13) until they are flush with the wall. Secure the Wallmount Bracket (07) with screws (12).

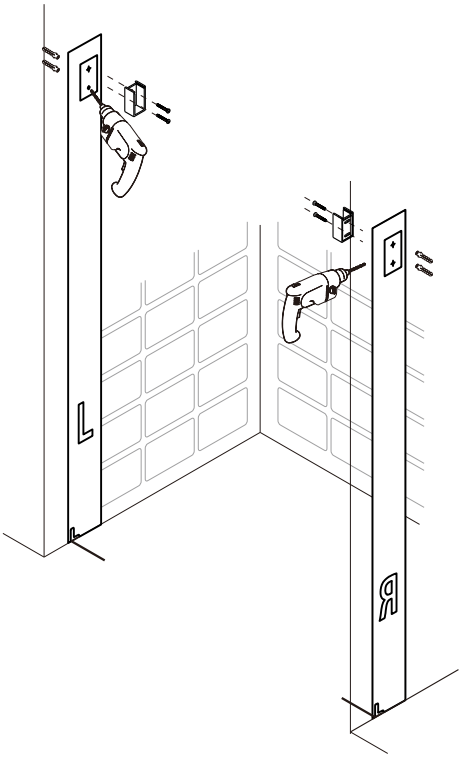

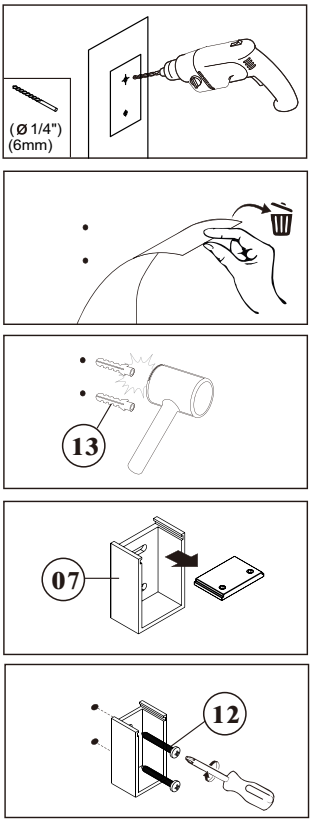

Parts Needed

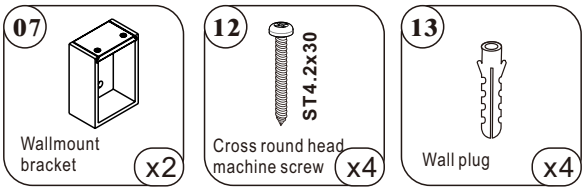

Tools Needed

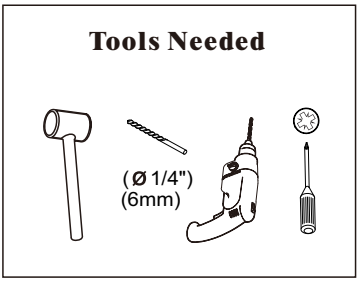

05 Place the running rail (01) into the Wallmount Bracket (07). Then, use an Allen key (14) to secure the running rail (01) in place

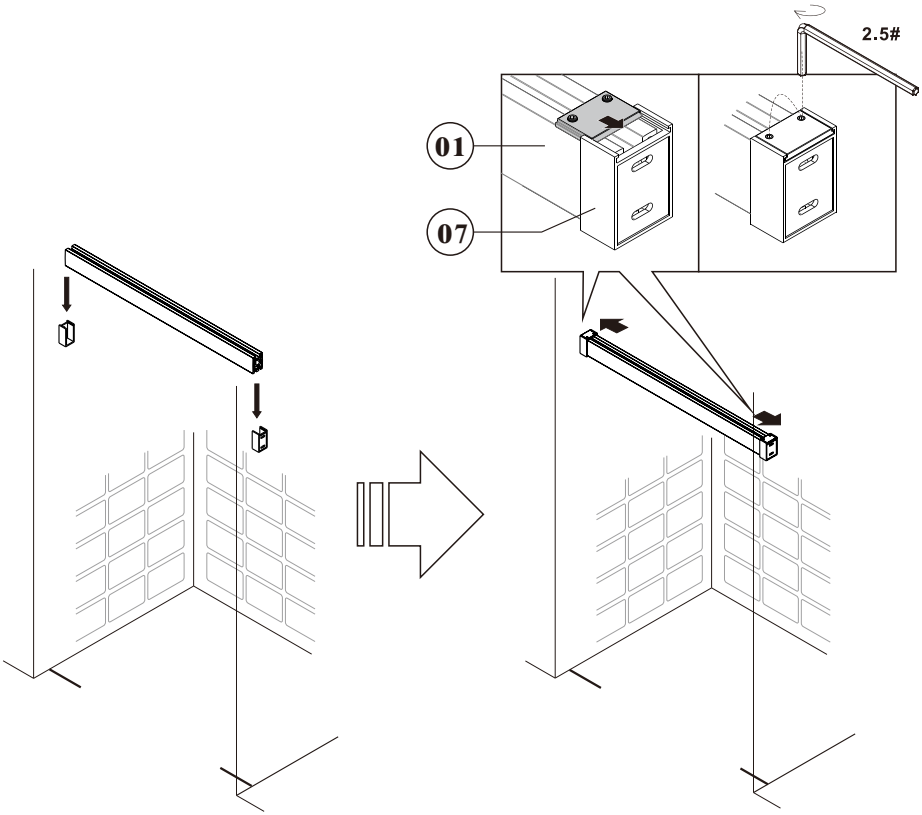

Parts Needed

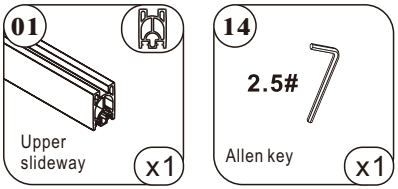

06

Install the door roller (08) on the movable glass panels (06) and carefully move the inner glass door into the interior of the room. Make sure to align the door rollers (08) in the correct direction.

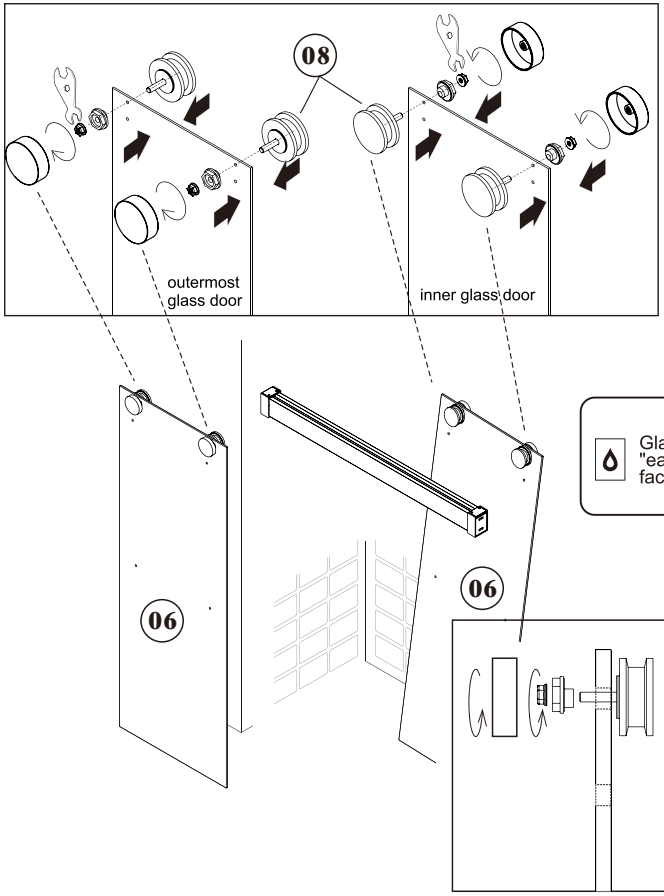

Parts Needed

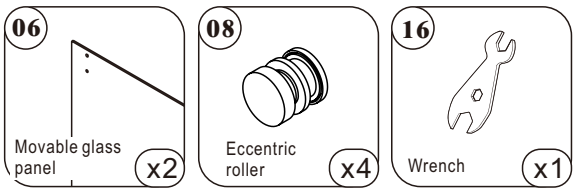

07 Gently hang the outmost glass door by its two top rollers (08) onto the running rail (01).

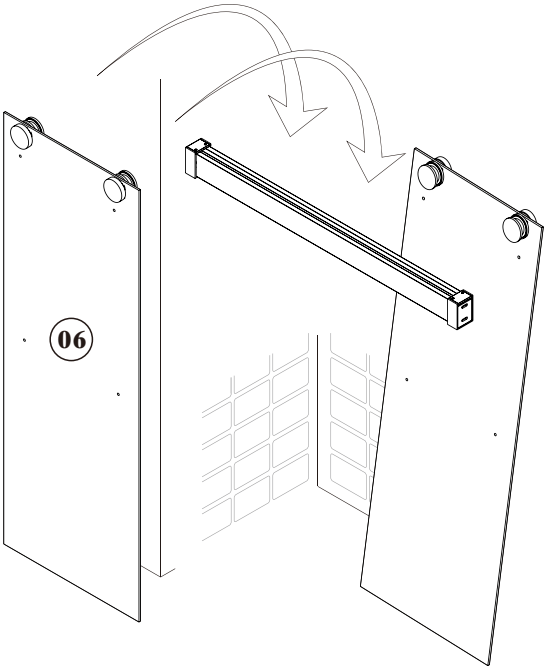

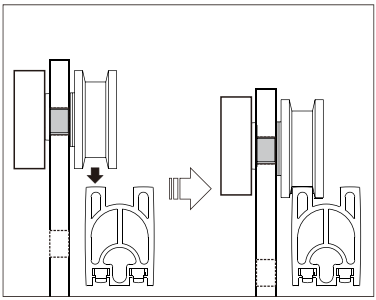

08

Loosely install the anti-jumps (09) onto the movable glass panels (06).

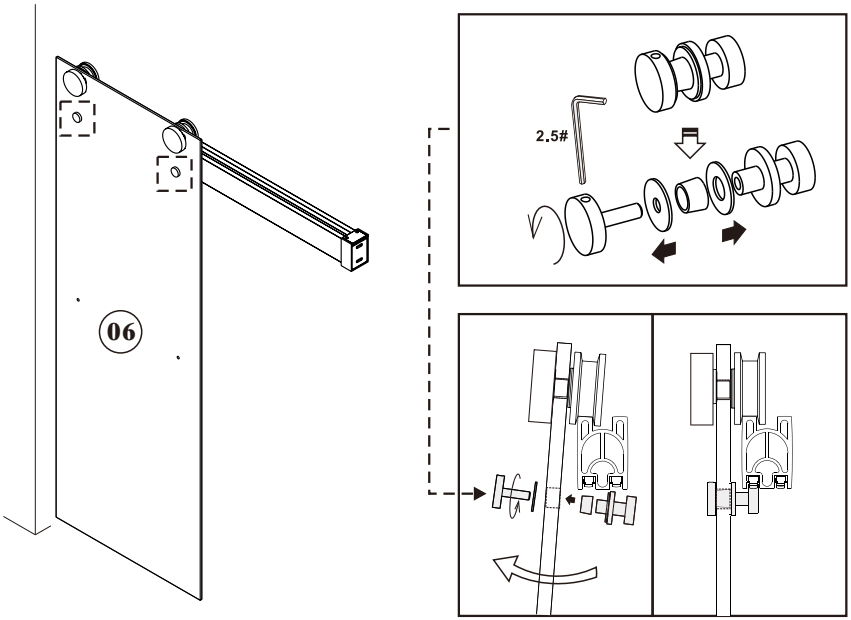

Parts Needed

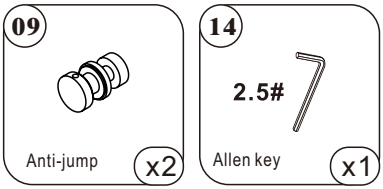

09

Apply silicone sealant on the bottom sides of the two decorative caps (11) and threshold (02), and side the decorative cap (11) into the Threshold (02). Then, place the threshold (02) in the marked position.

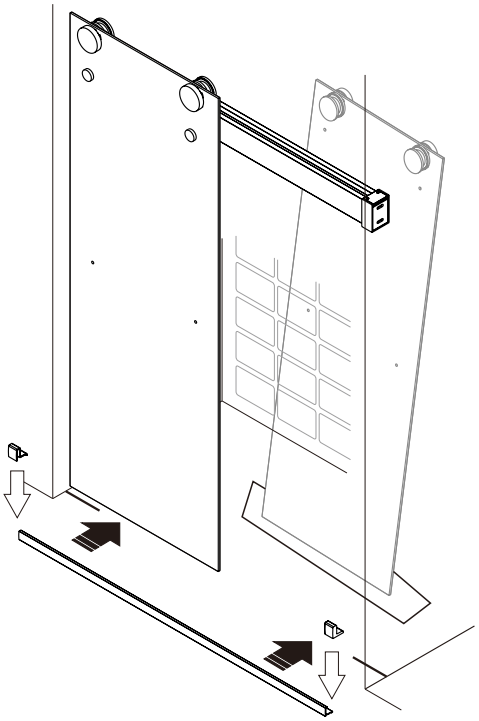

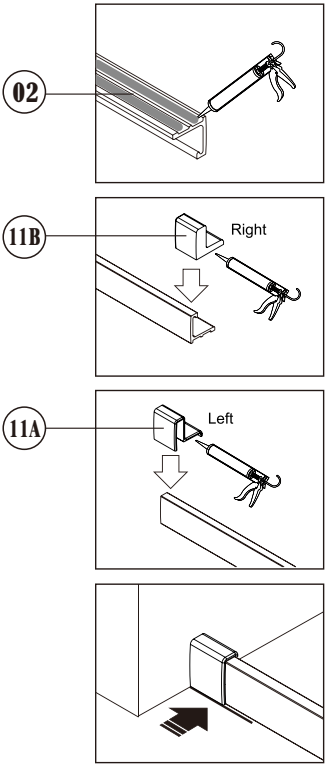

Parts Needed

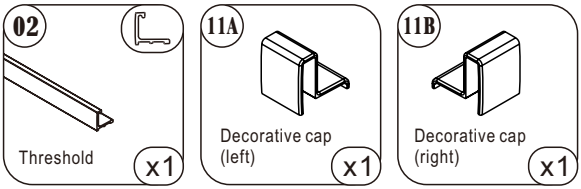

Tools Needed

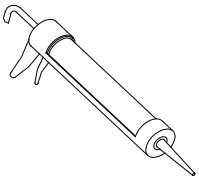

10 Disassemble the guide block (10) into two parts (a and b). Place part (a) onto the middle of the threshold (02), the use a pencil to mark the position of the hole in part (a).

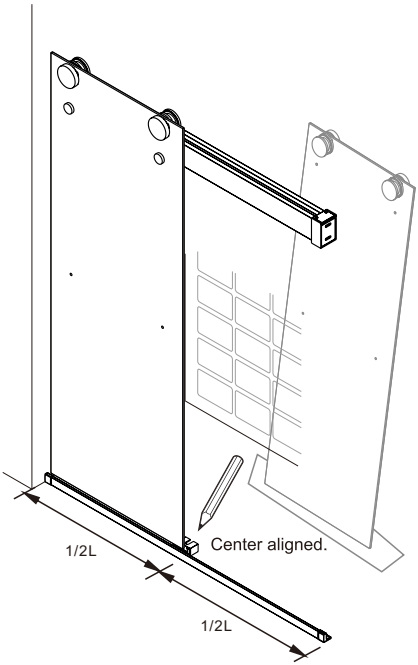

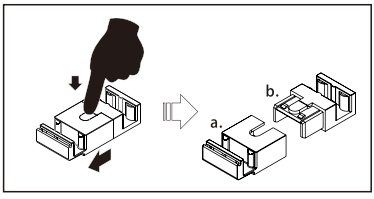

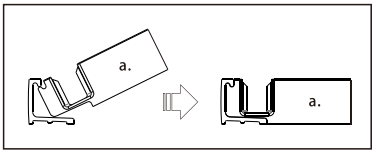

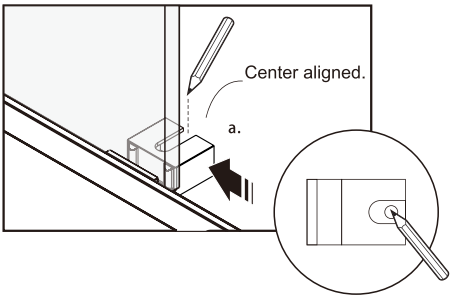

Parts Needed

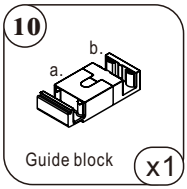

Tools Needed

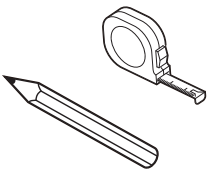

For customer support, please call Avanity Corporation at 866-522-5578 weekdays 9:00 to 5:00 PST
Pour le support client, s'il vous plaît appelez au 866-522-5578 Avanity Corporation semaine 9:00-5:00 PST

11 Drill the marked hole and insert the wall plug (13) using a rubber mallet. Then, Install part (a) of the guide block (10) with the screw (12).

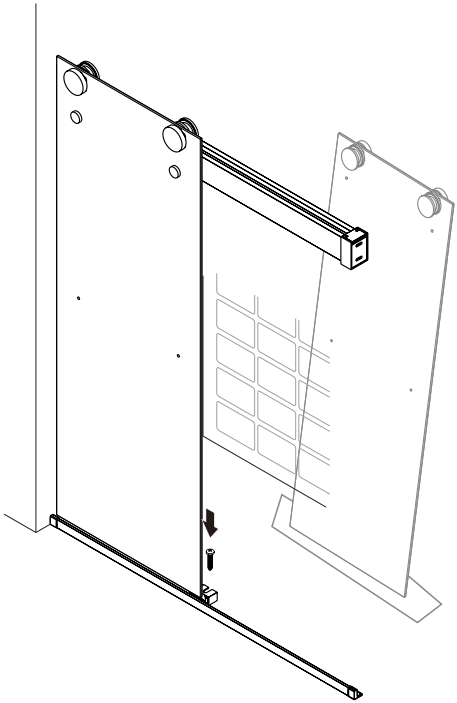

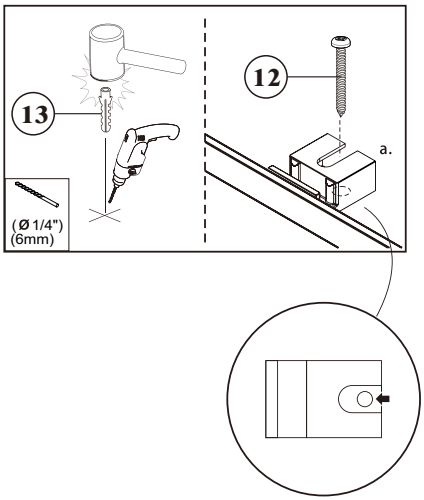

Parts Needed

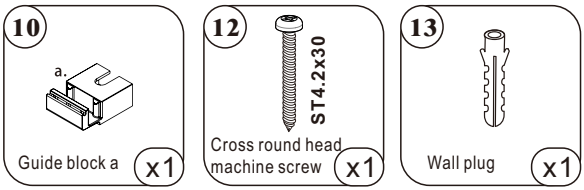

Tools Needed

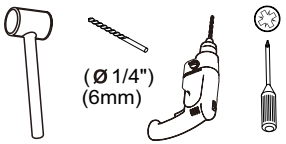

For customer support, please call Avanity Corporation at 866-522-5578 weekdays 9:00 to 5:00 PST
Pour le support client, s'il vous plaît appelez au 866-522-5578 Avanity Corporation semaine 9:00-5:00 PST

12 Hang the inner glass door by its two top roller (08) on the running rail (01) and ensure the bottom of the door is seated inside part (b) of the guide block (10).

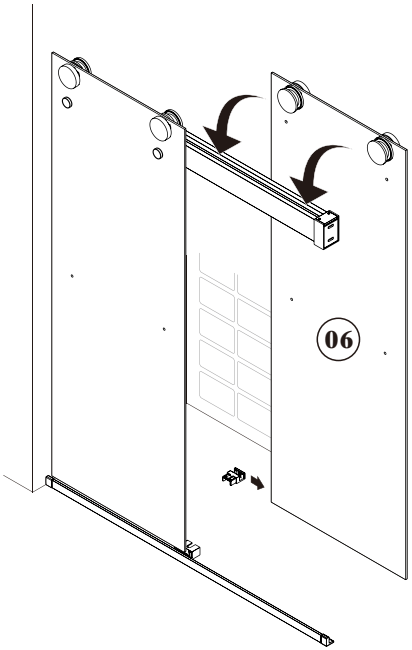

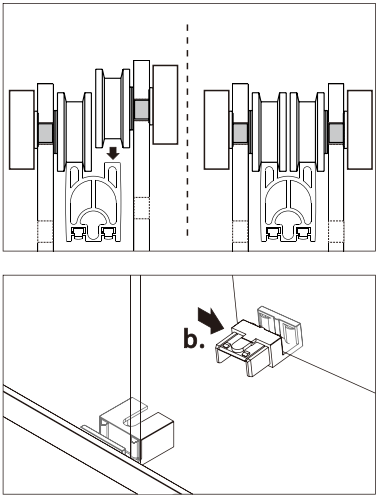

Parts Needed

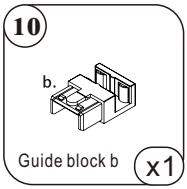

For customer support, please call Avanity Corporation at 866-522-5578 weekdays 9:00 to 5:00 PST
Pour le support client, s'il vous plaît appelez au 866-522-5578 Avanity Corporation semaine 9:00-5:00 PST

13

Loosely install the anti-jumps (09) onto the movable glass panels (06). Then, reassemble parts (a) and (b) of the guide block (10) together.

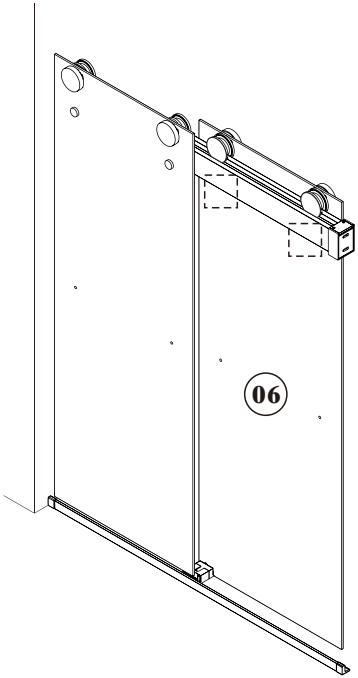

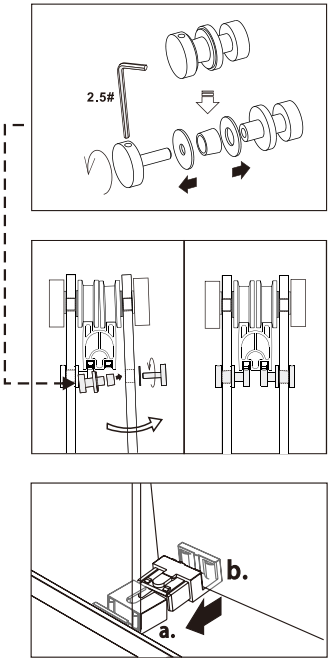

Parts Needed

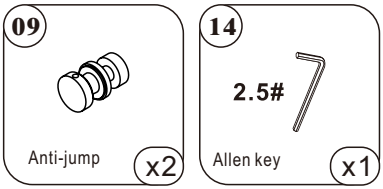

14 Install the four vertical seal strips (03) onto the two glass panels.

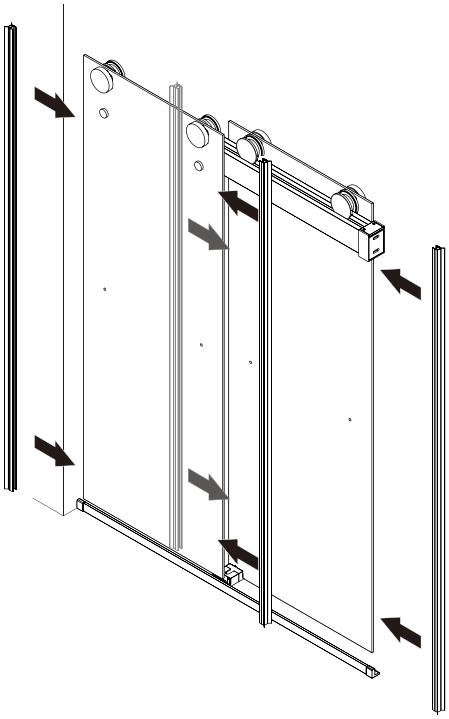

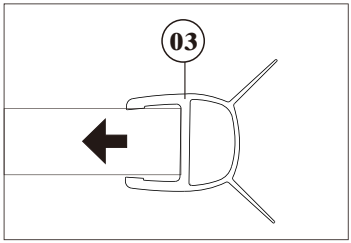

Parts Needed

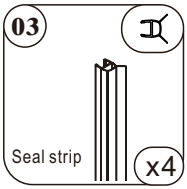

15 Install the two handles (04) on the movable glass panels.

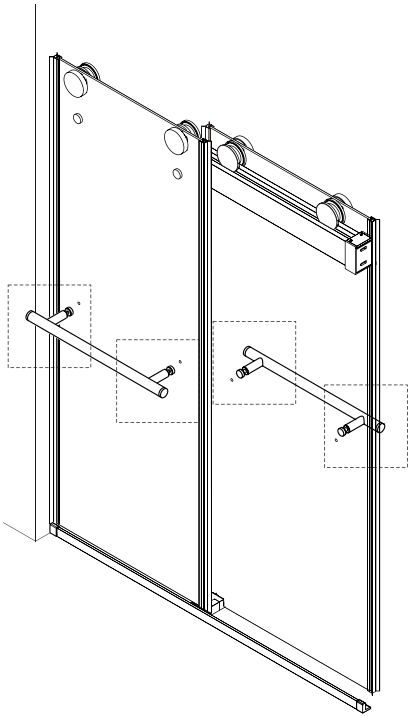

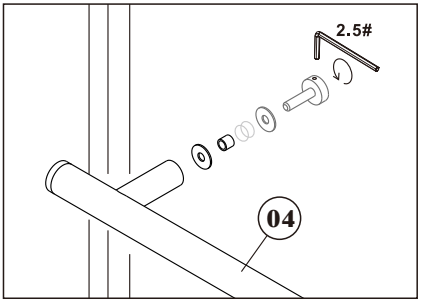

Parts Needed

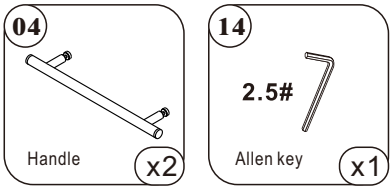

16 The running rail contains four movable buffer blocks. Ensure that the anti-jump (09) is centered on the buffer block when the door is closed.

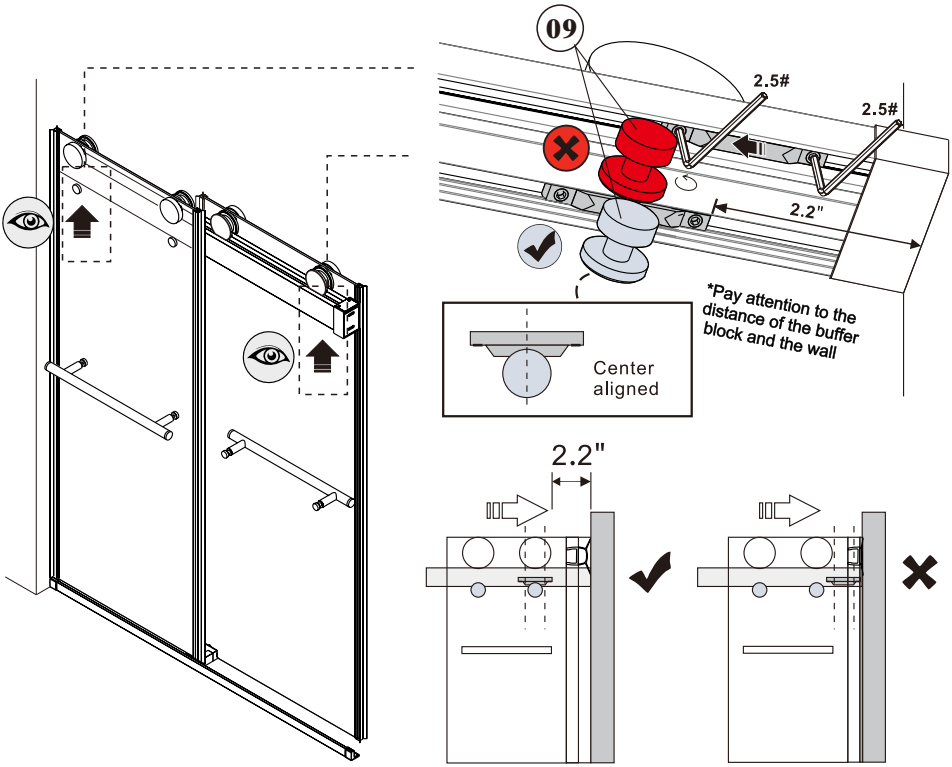

Parts Needed

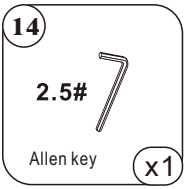

17 Note: Remove the outer cover of the Eccentric Roller (08) and use the Allen key (15) and wrench (16) to loosen the hexagonal nut by one turn. Do not completely remove the nut; just loosen it enough to adjust the Eccentric Roller (08). Manually adjust the position of the Eccentric Roller (08) up and down to ensure that the buffer block and the anti-jump (09) have sufficient contact area. Then, tighten the hexagonal nut to secure the Eccentric Roller (08) and reinstall the outer cover.

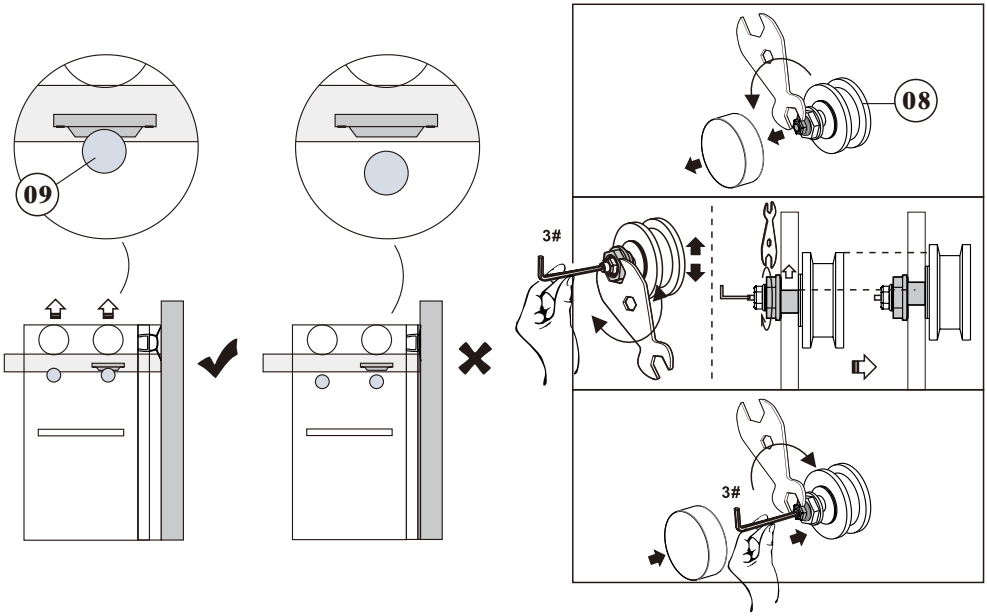

Parts Needed

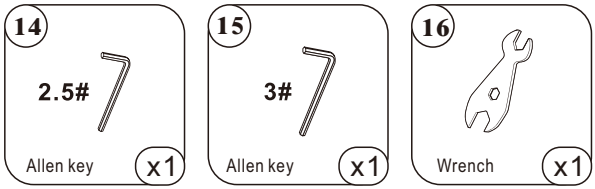

18 Apply silicone sealant only to the outside edge.Allow24 hours for the sealant to dry before using the door.



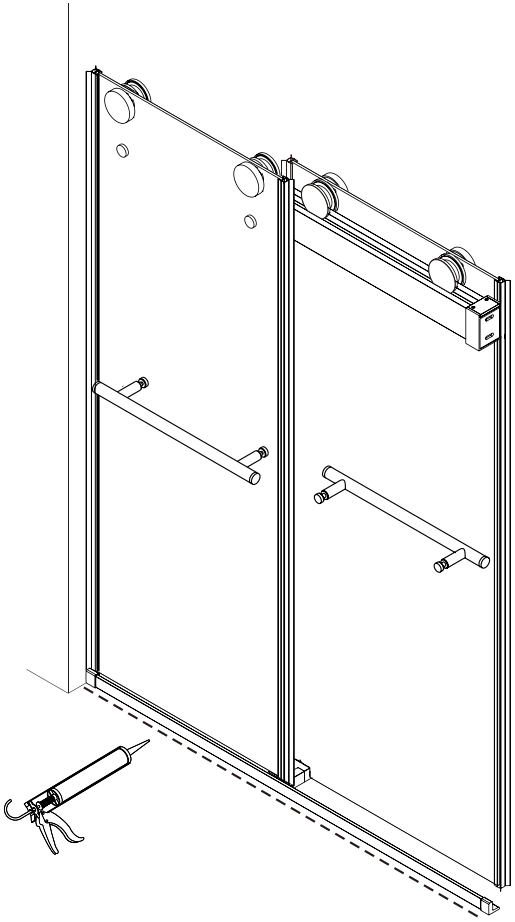

Tools Needed

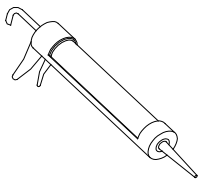

Routine Inspection & Care

To maintain safe operation and extend the life of your shower door, we recommend periodic inspection of the glass and hardware components.

- Verify the enclosure is stable and operates smoothly
- Check that all screws and fasteners are tight
- Confirm the sliding door moves freely and aligns correctly
- Inspect glass edges for chips, cracks, or damage
- Examine seals and silicone for gaps or deterioration

If any damage or misalignment is detected, discontinue use until the issue has been corrected.

Glass Care

- Wipe glass surfaces after each use with a soft cloth or squeegee to reduce water spots and soap residue.
- Clean using mild soap and water or a non-abrasive glass cleaner.
- Do not use abrasive cleaners, scouring pads, or metal brushes, as these may damage the glass surface.

NOTE: Hard water deposits left to dry may permanently mark the glass over time.

Hardware Care

- Dry metal components after use to maintain finish quality.
- Clean with a soft cloth and mild cleaner only.
- Do not use cleaners containing bleach, ammonia, acid, or abrasives.
- Rinse and dry thoroughly after cleaning.

Sealant Maintenance

- Inspect silicone seals periodically for cracking or separation.
- Replace silicone as needed to prevent water leakage.

For customer support, please call Avanity Corporation at 866-522-5578 weekdays 9:00 to 5:00 PST
Pour le support client, s'il vous plaît appelez au 866-522-5578 Avanity Corporation semaine 9:00-5:00 PST

Troubleshooting Guide

Before contacting customer support, please have your **model number**, **purchase information**, and **installation date** available.

Issue	Possible Causes	Solutions
Door does not slide smoothly	• Rollers not aligned or loose	• Check roller alignment and tighten fixings
	• Debris in track or guide	• Clean track and guides
	• Bottom guide incorrectly positioned	• Reposition bottom door guide as needed
Door does not close evenly	• Roller height misadjusted	• Adjust roller height to align door
	• Wall profiles not plumb	• Verify wall profiles are level and plumb
Water leakage	• Seals incorrectly installed	• Check seal orientation and placement
	• Incomplete silicone seal	• Apply silicone along full interior perimeter
	• Seals installed incorrectly	• Reinstall seals correctly
	• Door not closing fully	• Adjust door alignment to ensure full closure
Door rubbing or contacting threshold	• Threshold not level	• Confirm threshold is level
	• Rollers set too low or high	• Adjust roller height
	• Bottom guide misaligned	• Reposition bottom doorguide
Door feels loose or unstable	• Loose screws or brackets	• Tighten all screws and fasteners
	• Anti-jump stops not secured	• Secure anti-jump components
	• Bottom guide missing or loose	• Check bottom guide installation
Glass panels misaligned	• Improper glass positioning	• Reposition glass panels
	• Fixings not tightened evenly	• Tighten fixings evenly from the inside
Noise during operation	• Rollers not seated correctly	• Check roller seating in guide rail
	• Guides contacting glass incorrectly	• Adjust guides to prevent binding
Silicone peeling or leaking	• Poor surface preparation	• Remove and reapply silicone
	• Shower used before silicone cured	• Allow at least 24 hours curing time before use

For customer support, please call Avanity Corporation at 866-522-5578 weekdays 9:00 to 5:00 PST
Pour le support client, s'il vous plaît appelez au 866-522-5578 Avanity Corporation semaine 9:00-5:00 PST