USER'S MANUAL
Inflatable Fishing Float Tube

Thank you for purchasing our Inflatable Fishing Float Tube. Please contact us if you have difficulty with installing or need replacement parts. Customer service is here to assist you all the time.

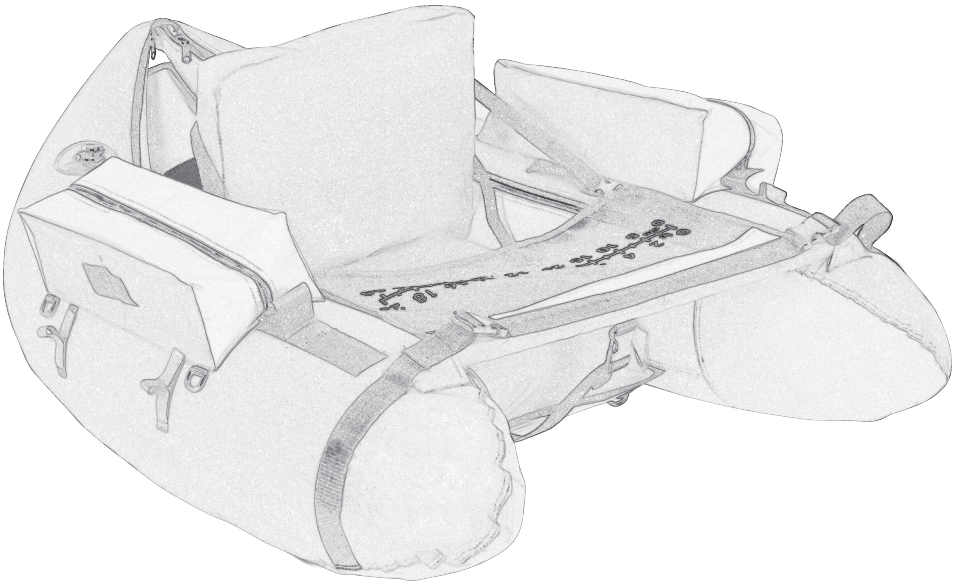

THIS INSTRUCTION BOOKLET CONTAINS IMPORTANT SAFETY INFORMATION. PLEASE READ AND KEEP FOR FUTURE REFERENCE.

A

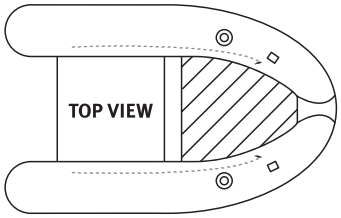

Inflatable Fishing float tube

B

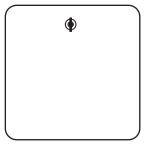

Inflatable cushion

C

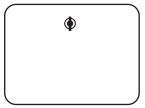

Inflatable backrest

D

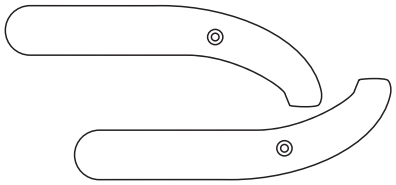

Left flotation bladders
Right flotation bladders

E

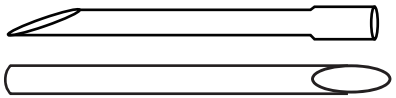

two-piece spreader bar

F



2x Black round gasket

G



Air pump with Multiple Nozzles

H



2x shoulder straps

I

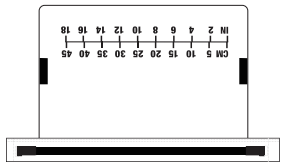

spreader bar sleeve
with mesh ruler for fishing

J



flotation bladders
repair kit

K

⚠No fish hook included

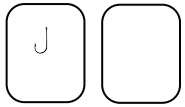

2x EVA Cystosepiment
For place fish hook

Before You Start

⚠ **Please read all instructions carefully**

⚠ **Retain instructions for future reference**

⚠ **Separate and count all parts and hardware**

⚠ **Read through each step carefully and follow the proper order**

⚠ **We recommend that, where possible, all items are assembled near to the area in which they will be placed in use, to avoid moving the product unnecessarily once assembled**

⚠ **Always place the product on a flat, steady and stable surface**

⚠ **Keep all small parts and packaging materials for this product away frombabies and children as they potentially pose a serious choking hazard**

SAFETY

- You must wear an approved personal flotation device (PFD).
- This is not a life saving device.
- This product is not a toy and is not to be used by children under 12 years of age or by any child without adult supervision. Check the laws in your state.
- Use only in still and calm water. Never use in high wind or water with currents.

SAFE FLOATING

- Never float alone.
- Never use this float tube in bad weather.
- Never leave float tube in water when not in use.
- Keep sharp objects (knives, fish hooks, etc.) away from the pontoons.
- Do not use under the influence of drugs or alcohol.
- Do not tow this float tube with a person in it.
- Do not overload.
- Seek shelter from water if there is threat of lightning.

⚠WARNING

- Not a life saving device.
- Not a toy.
- Not to be used by children under age 12.
- Do not overload.
- Always wear an approved personal flotation device (life preserver).
- Check for leaks before using.
- Use only in water away from debris and obstructions.
- Partially deflate if leaving in the sun.
- Never leave float tube in water when not in use.
- Do not over inflate
- Do not use in high wind, rapid currents, open water or dangerous tides.
- Know and follow local water safety rules and boating regulations.
- Follow the inflation sequence listed in the instruction manual.

INFLATION

- Do not use CO2 or a high pressure air compressor to inflate.
- Follow the inflation instructions listed in this manual.
- Check for leaks before using.
- Remember that air pressure changes with temperature and elevation so always check your inflation level before use.
- Partially deflate if leaving in the sun.
- Inflate the seat and float bladders to 0.1 bar / 1.5psi

This manual lists certain recommended practices and provides some basic precautions. However, this list of precautions is not all-inclusive. Users must follow all applicable laws, rules, and regulations and should exercise appropriate caution in the safe operation of this float tube.

REMEMBER - always exercise common sense when using your float tube.

ASSEMBLY AND USE

How to inflate your float tube bladders

Float tube bladders are designed to be inflated by foot or hand pump.

Your float tube has Boston type valves for easy inflation and deflation. The valve is constructed in 3 parts:

A. Bladder valve part
B. Middle valve part
C. Upper cap

To inflate:

The middle part [B] must be screwed in tightly to the bladder valve part [A]. The upper cap [C] must be removed from the middle valve in order to inflate.
Use a pump to inflate the float tube just enough to hold their shape.

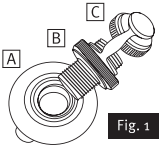

Fig. 1

To deflate:

DO NOT REMOVE CAP – Unscrew the middle valve (B) from the bladder valve part [A]. It is not necessary to unscrew the middle valve/bottom valve completely to deflate the float tube.

Inflating and assembling your float tube

1. Place your float tube flat on the floor with the pockets facing up.
2. Inflate the two pontoon bladders about 30%—just enough to hold their shape.
3. Check the bladders by unzipping the pontoons (Fig. 2). The bladders should lie flat, untwisted and centered underneath the pontoon pockets. Make sure the rip-and-grip tabs [A] and [B] that attach the bladder to the pontoon cover align (Fig. 3). (A twisted bladder will distort the cover when you blow it up.)

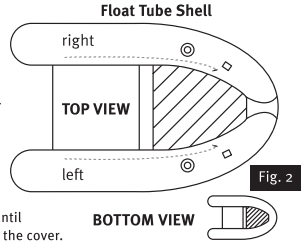

Fig. 2

4. Inflate the flotation bladders until most of the wrinkles are out of the cover. If any twists develop stop, deflate the bladder, straighten it within its pocket and re-inflate. Close the valve caps tightly.

You may need to add or release some air if you travel between low and high elevations or if the temperature changes. Always take out some air before leaving your float tube in a car—the heat can expand the air in the bladders quite a bit.

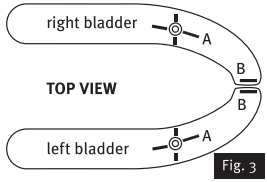

Fig. 3

5. Connect the two spreader bar pieces by inserting the two long tubes into the shorter coupling tube with the angled ends on both long tube ends facing out. Now place the mesh stripping apron on the floor with the graphics facing up. Slip the spreader bar with the angled ends facing down into the fabric sleeve at one end of the apron.

Slip the ends of the apron sleeve into the fabric receptacles on the top and front of the left and right pontoons. For hunting, use the spreader bar sleeve without the apron. Steps are as Fig.4 shows.

6. There are two backrest support straps sewn to the seat backrest with a side release buckle on either end. Be sure these buckles are clipped to their corresponding parts on the inside pontoon. Adjust the length of the strap for a comfortable seat back angle.

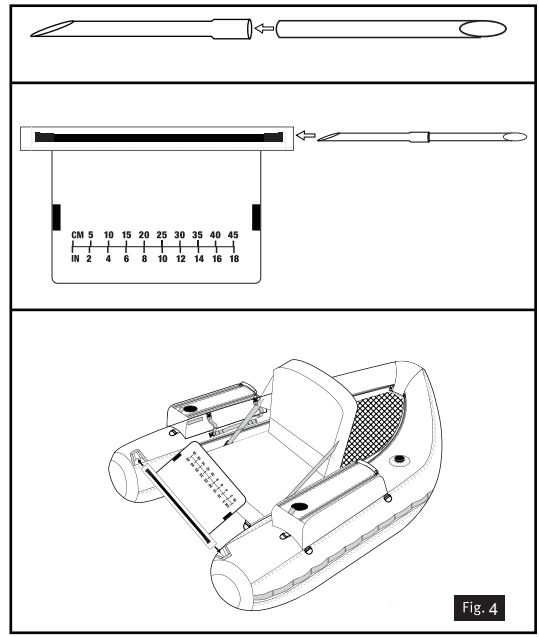

Fig. 4

Launching and using your float tube

1. Start with a gentle slope (like a boat ramp).
2. Attach fins to your feet, then place your float tube in knee-high water. Step into your tube from the open side and turn so that your back is facing the backrest.
3. Sit down in your float tube, refasten the stripping apron and float. Practice kicking with your fins to go backward or to turn.

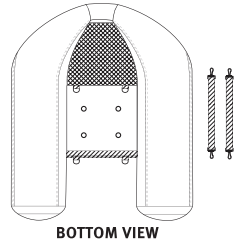

Carrying your float tube

Included with your float tube is a pair of backpacking shoulder straps. Connect the shoulder straps to the D-rings located on the bottom of the float tube if you wish to carry the float tube. Unhook and store the shoulder straps before going into the water.

Safety

Be a smart floater. Use a Coast Guard approved personal flotation device while using your float tube and fish with a buddy. Your float tube is designed for calm water. It is not to be used as a river rafting device. Never float during thunderstorms or in any rough weather.

ASSEMBLY AND USE

Care and storage of your float tube

Always partially deflate the bladders before storing your assembled float tube in a vehicle or hot area. The air in the bladders can expand significantly.

If you are not going to use your float tube for an extended period deflate it and store it. To avoid mildew, be sure that your float tube is dry before you pack it and that you store it in a dry place.