Assembly Instructions

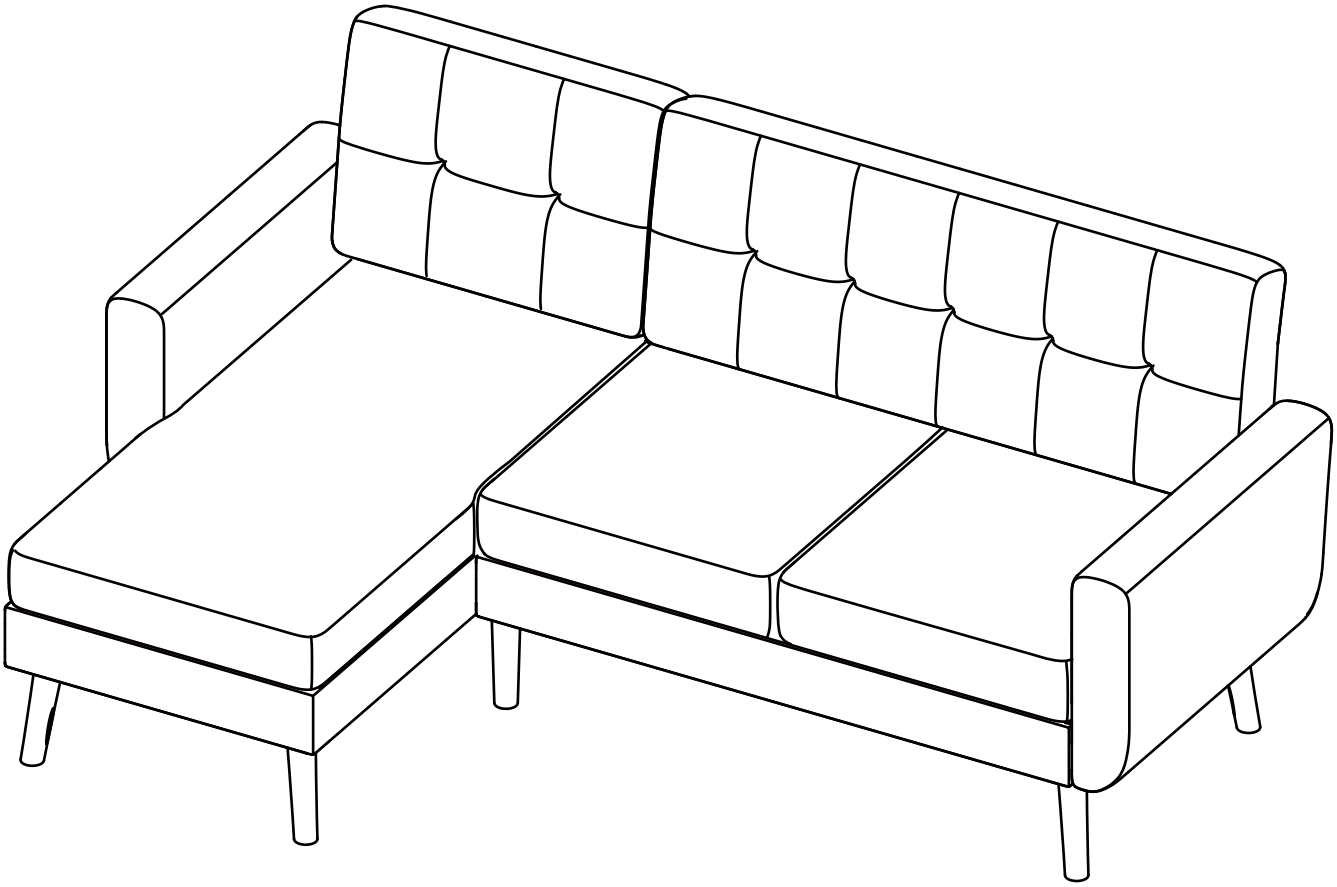

SFC001

Before Assembly
Important Notes

Thank you for choosing our product.
Please read this section carefully before you begin assembly. Keep this booklet for future reference.

NOTICE

Package Check:
Before you begin, please take a moment to check that all parts are present and undamaged. We also suggest keeping the outer packaging until you've done so.

Returns:
Once opened, compressed cushions cannot be recompressed.
Returns are accepted only for items in original, unopened condition with the original packaging retained. If you wish to return the product, please use the return label provided by us. Do not return the product without prior authorization.

⚠ WARNING

Small parts and plastic packaging materials are included. Keep all hardware, tiny components, and protective bags out of reach of babies, children, and pets during and after assembly to prevent accidental swallowing or suffocation.

CAUTION

Assembly Safety & Tips:

- Due to the weight and size of the sofa components, we strongly recommend that at least 2 adults work together to complete the assembly to avoid personal injury or product damage.
- Assemble the product on a clean, scratch-free, flat surface (such as a carpet or the cardboard shipping box) to prevent damaging your floors or scuffing the fabric.
- Follow all assembly steps in order.
- Do not fully tighten screws immediately. Secure all screws to about 80% first, then perform final tightening once all parts are aligned.

Need Help?

Contact our support team if you experience any of the following:

- Outer box is damaged.
- Product is damaged, bent, or cracked upon opening.
- Parts, accessories, or assembly tools are missing.
- Instructions are unclear.
- Product has functional problems.
- Any other issue you are not satisfied with.

Customer Support: xlmcustomerservice@gmail.com

Carton A

Ensure all parts are present and undamaged before starting. We recommend keeping the outer packaging until you have confirmed that all parts are present and undamaged.

Part

A-L Left Armrest

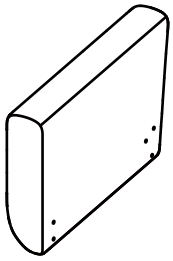

1x

A-R Right Armrest

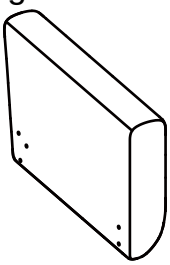

1x

B Princess Backpack

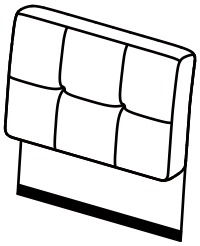

1x

C Front Metal

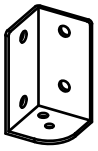

2x

D-L Left Rear Corner Iron

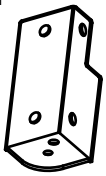

1x

D-R Right Rear Corner Iron

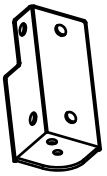

1x

E Double Seat Bag

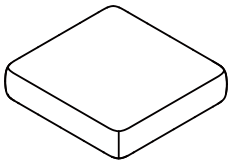

2x

F Ornamental Seat Frame

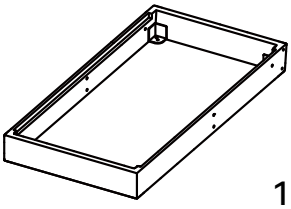

1x

G Double Seat Front Panel

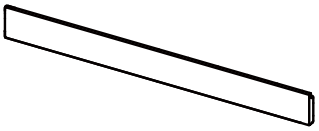

1x

H Princess Royal Spare Ribs Platter

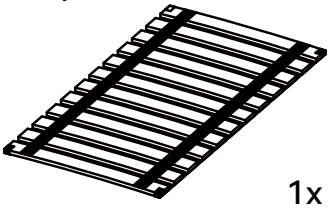

1x

I Right Armrest

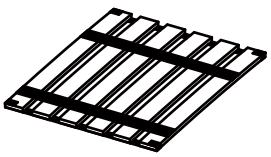

2x

J Carriage Of The Imperial Concubine

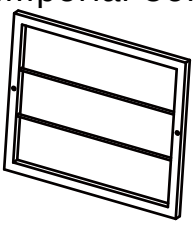

1x

K Double Shoulder Yoke

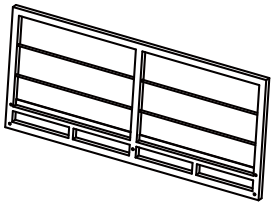

1x

L Double Bar

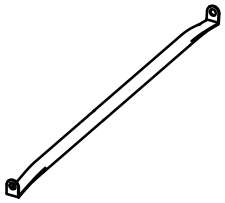

1x

M The Middle Support Of The Umbrella

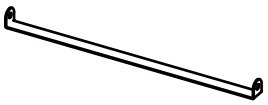

1x

N Princess Seat Bag

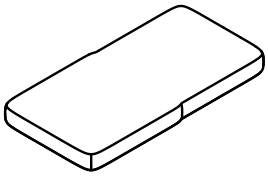

1x

O Double Backpack

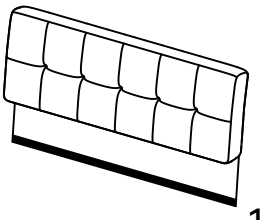

1x

P Straight Wood Foot

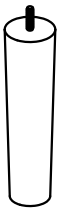

2x

Q Sloping Wooden Foot

5x

R connection

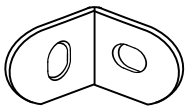

1x

a Screws M6x20mm

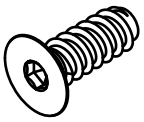

18x

b Screws M6x55mm

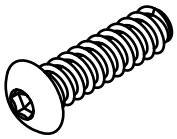

5x

c Screws M8*45mm

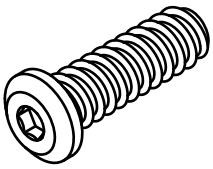

5x

d Screws M8*16mm

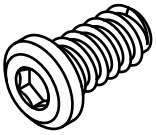

3x

e Washer
Ø6xØ16x1mm

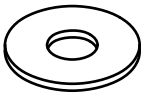

2x

f Washer
Ø8xØ18x1.5mm

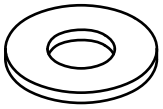

5x

g Allen Key

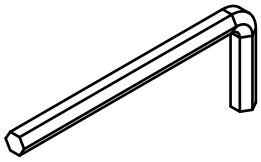

1x

Installation Steps

Carton 1

Take out 3 side legs Q from the left handle, take out 2 middle leg s P , 1 side leg Q.

STEP-1

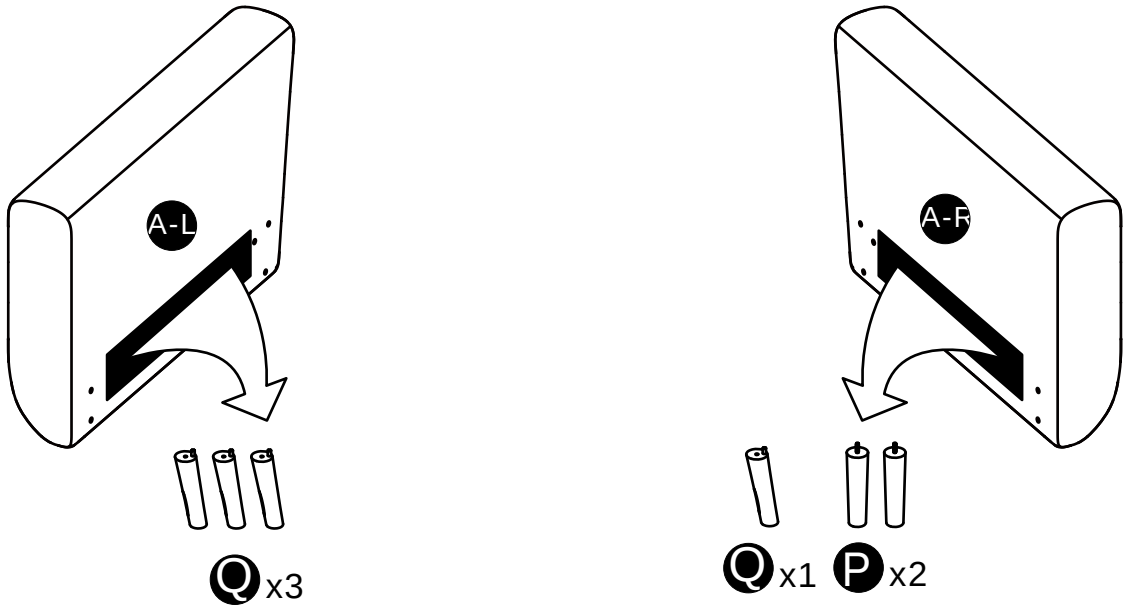

STEP-2 Screw A is used to fix angle iron C on the front panel G.

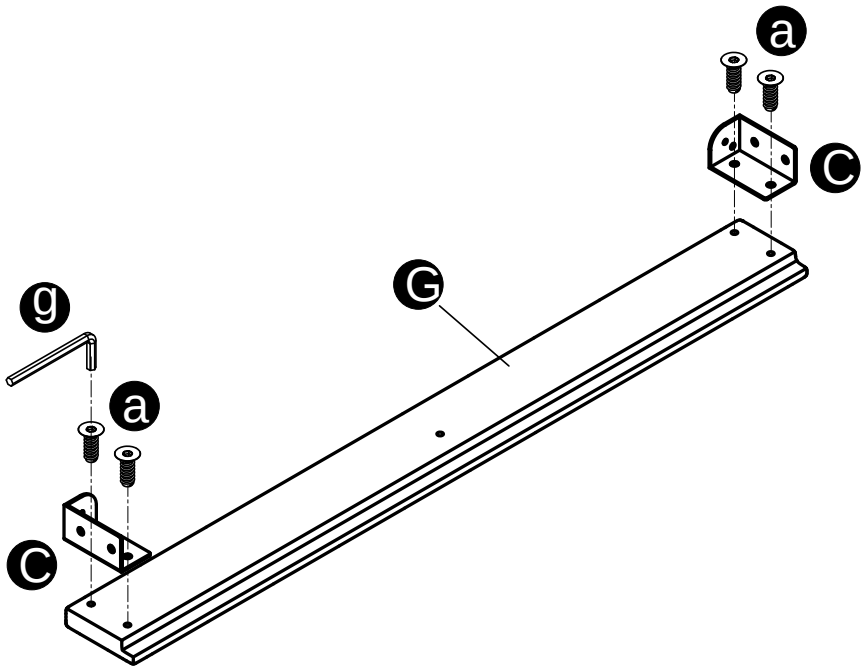

a x 4

STEP-3 Screw a is used to fix the angle iron D-L/D- R to the back frame K

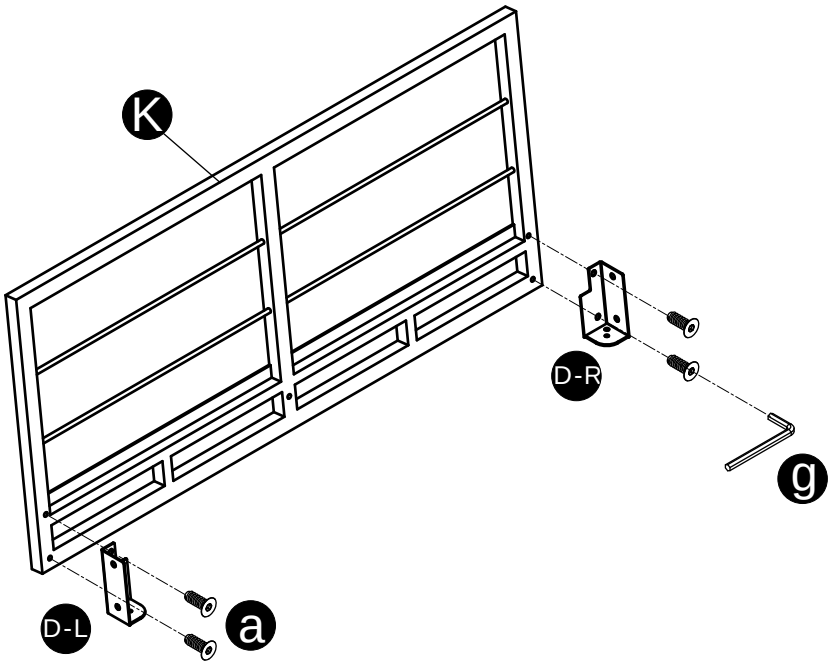

a x 4

STEP-4 Use screw a to link the right handrail A-R with the assembled front panel G back frame K.

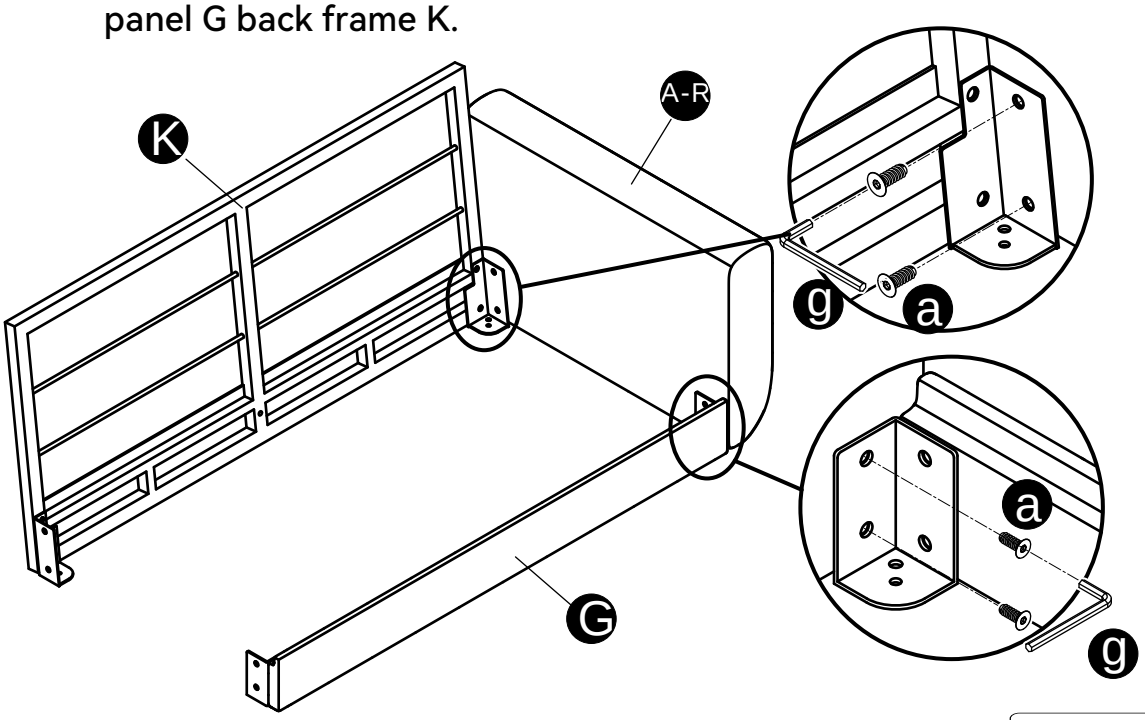

a x 4

STEP-5 The connecting rod L is fixed to the back frame K and the front panel with a screw a.

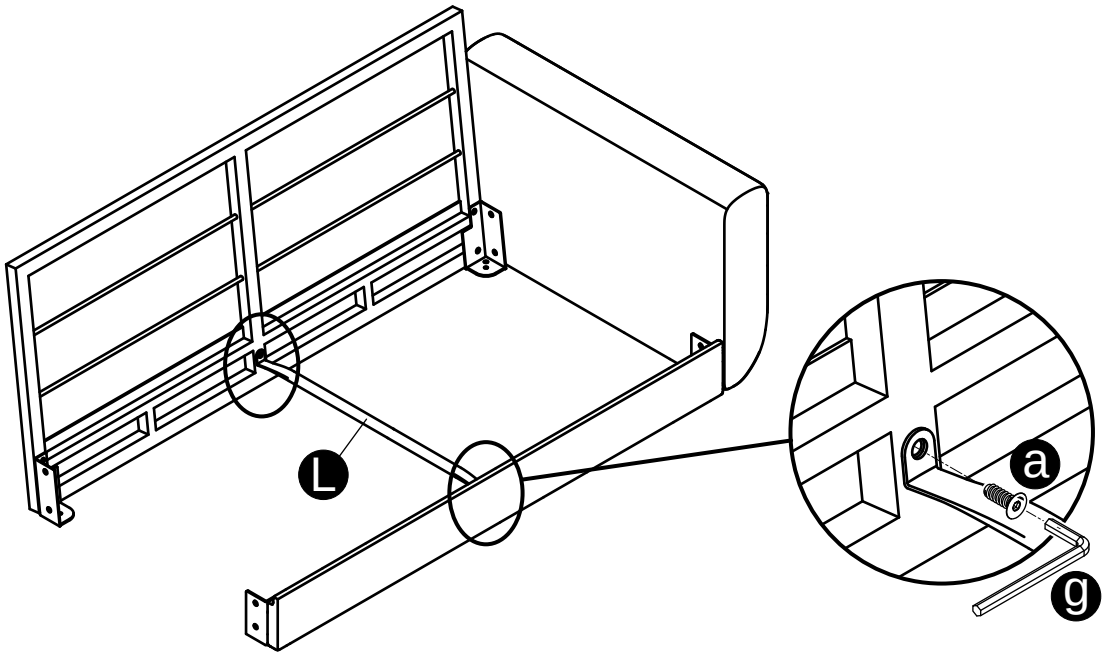

a x 2

STEP-6 Use screw b to connect the back frame J with the seat frame F.

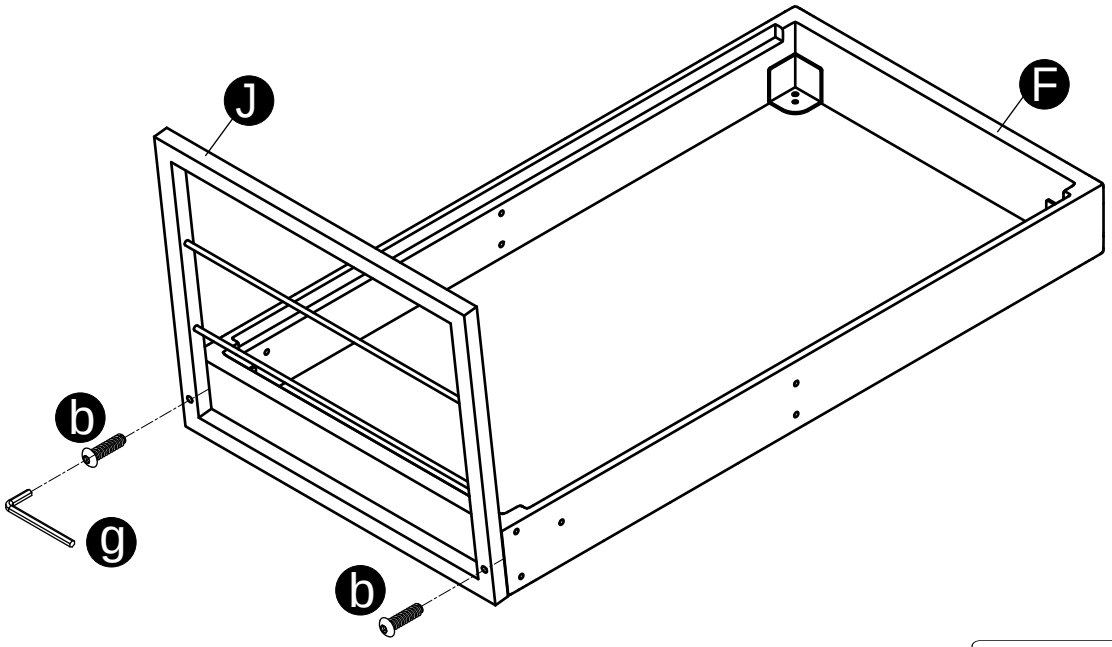

b x 2

STEP-7 Use screw b to link the seat frame F with the left armrest A-L.

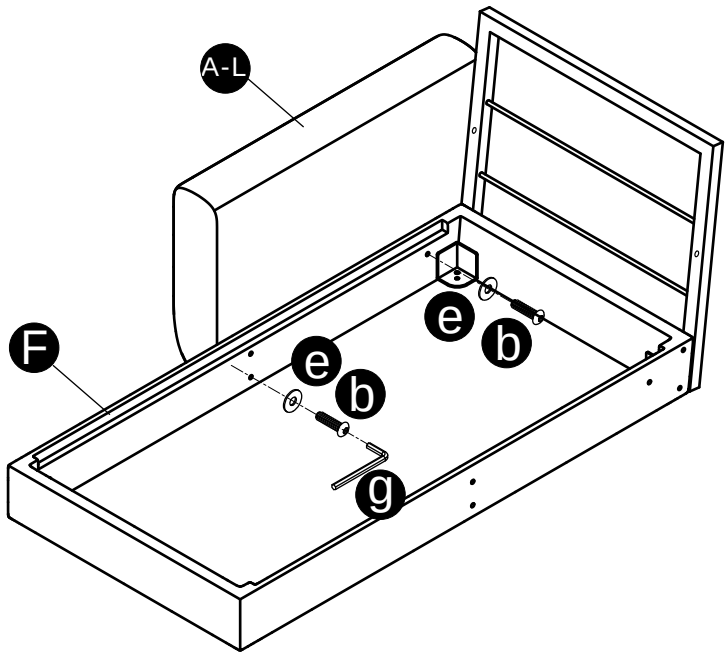

	b x 2
	e x 2

STEP-8 The back frame J and the left arm A-L are fixed with the connecting part R and screw a.

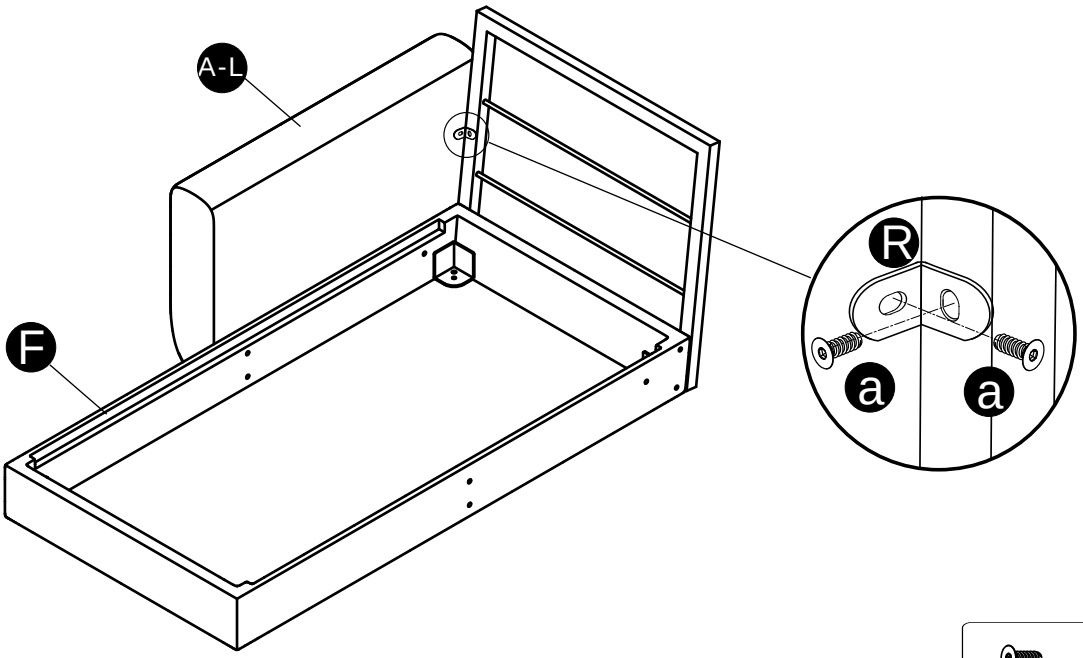

	a x 2

STEP-9 Connector M is fixed in the middle of the frame with screw d.

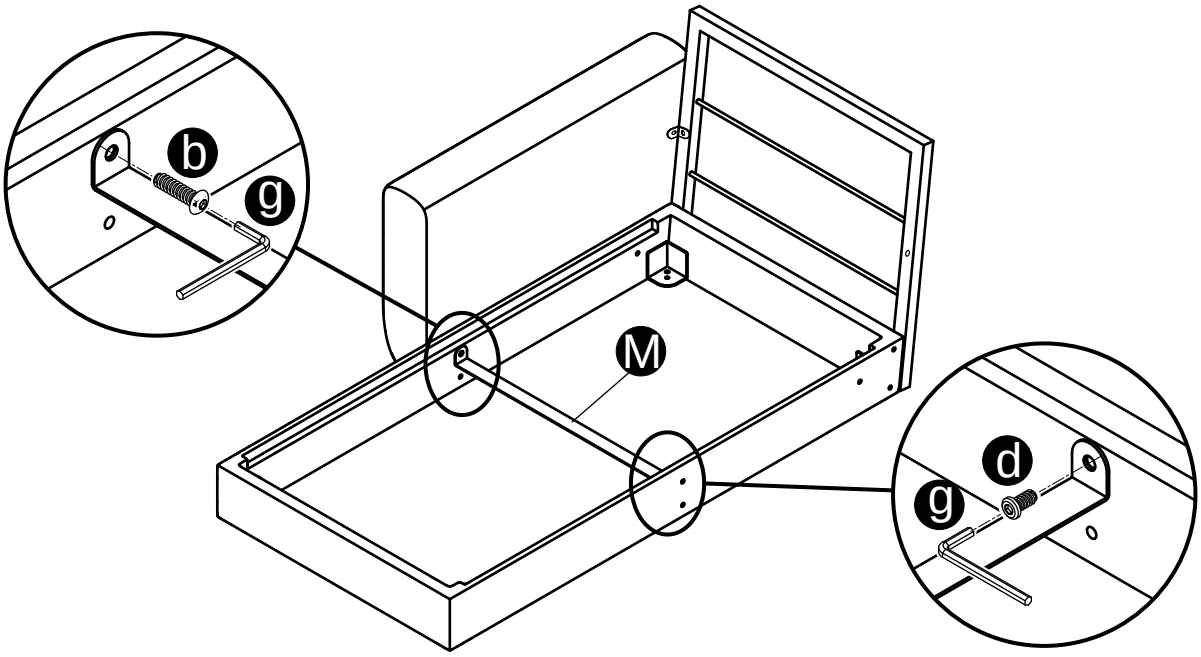

	b x 1
	d x 1

STEP-10 Then fix the assembled divan seat and the double seat with angle iron screws.

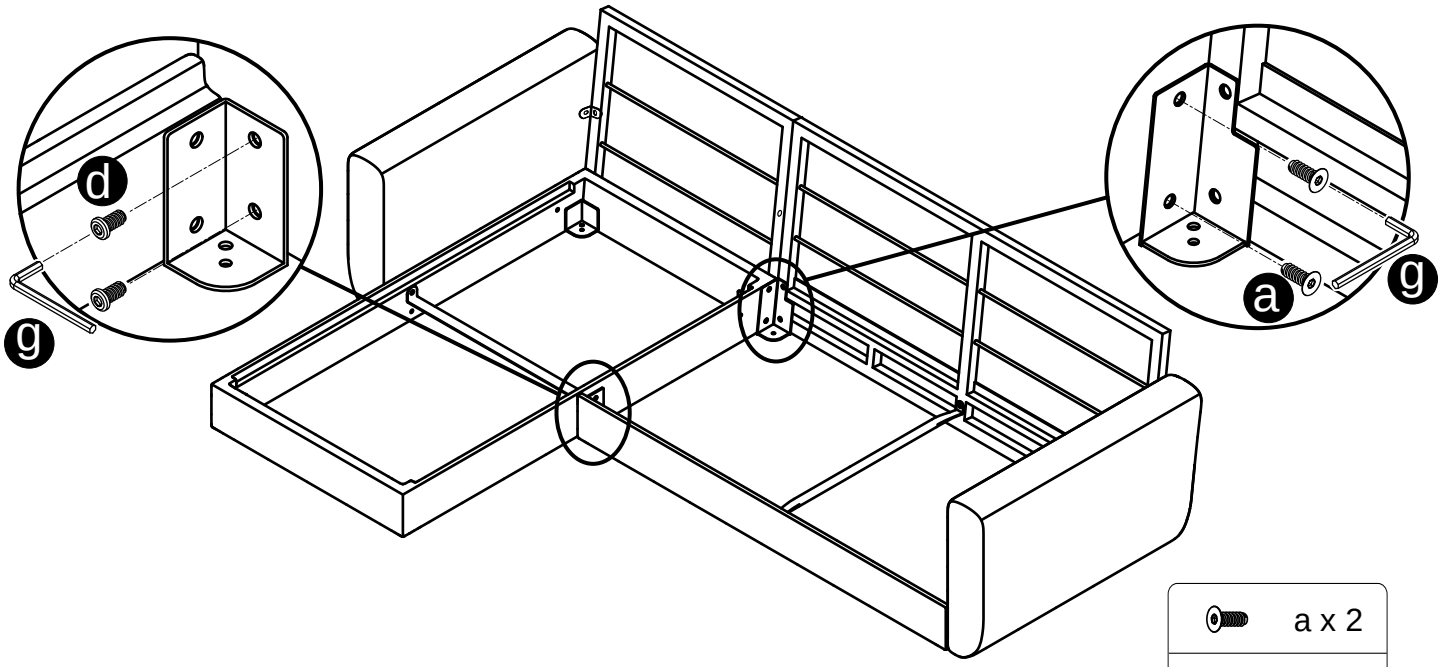

	a x 2
	d x 2

STEP-11 The side legs Q and the middle leg P are fixed to the bottom of the sofa using screw C.

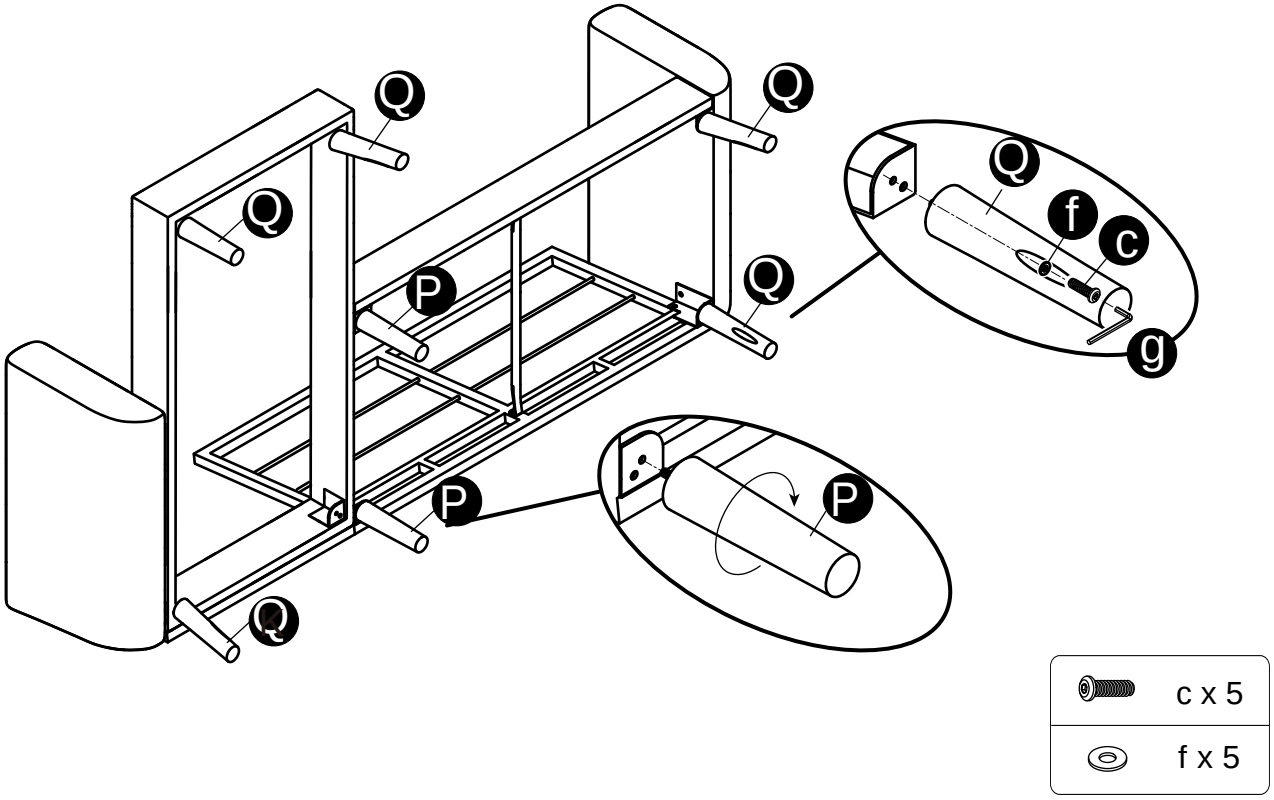

STEP-12 Board H should be placed on the divan seat, and board I should be placed on the double seat.

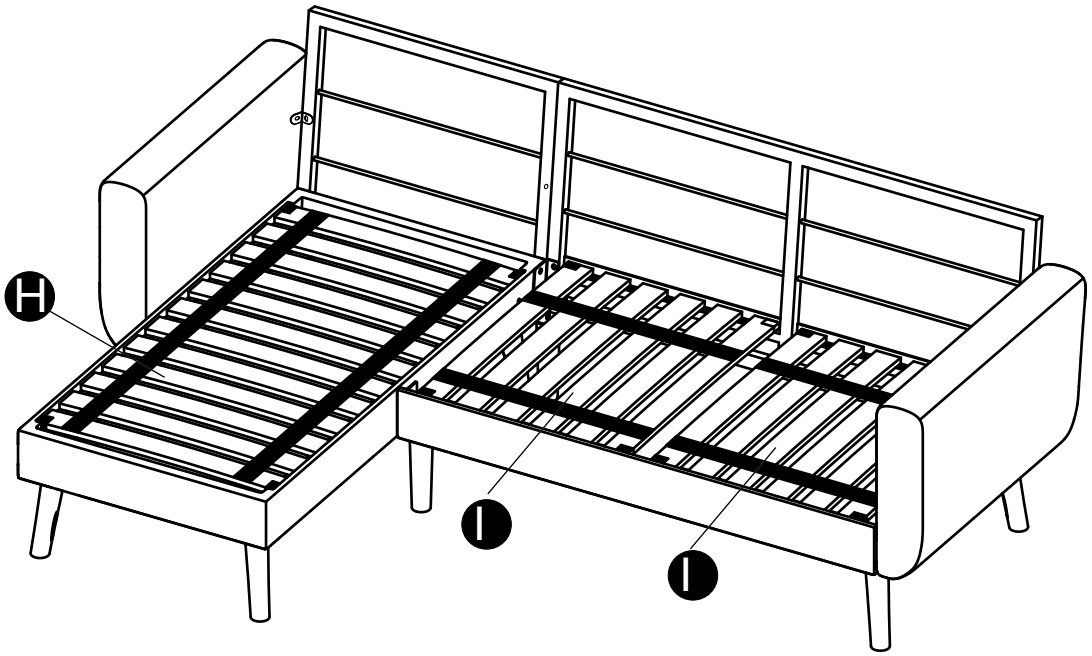

STEP-13 Place seat cushion N on the empress seat, and seat cushion E on the double seat.

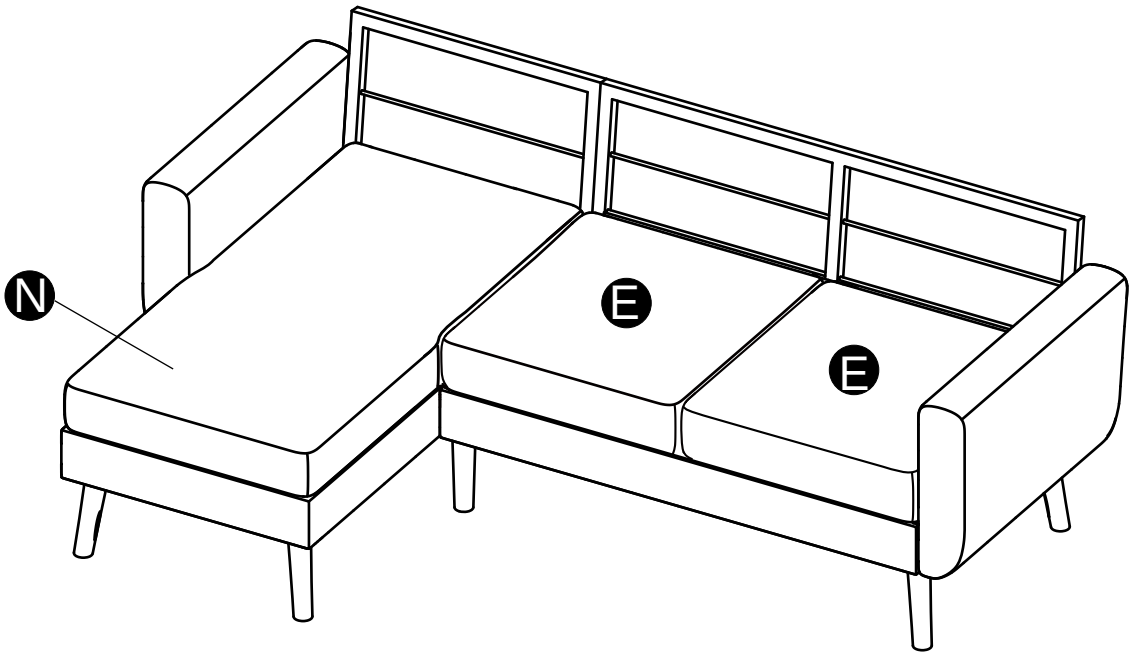

STEP-14 Put backpack B and O on the backrest.

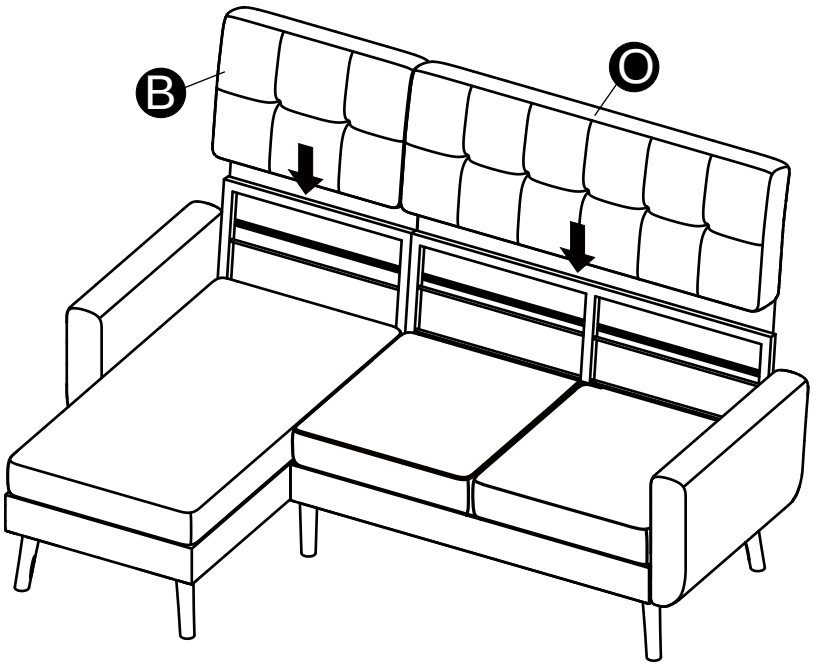

STEP-15 Glue the velcro on the back cover to the bottom of the back frame.

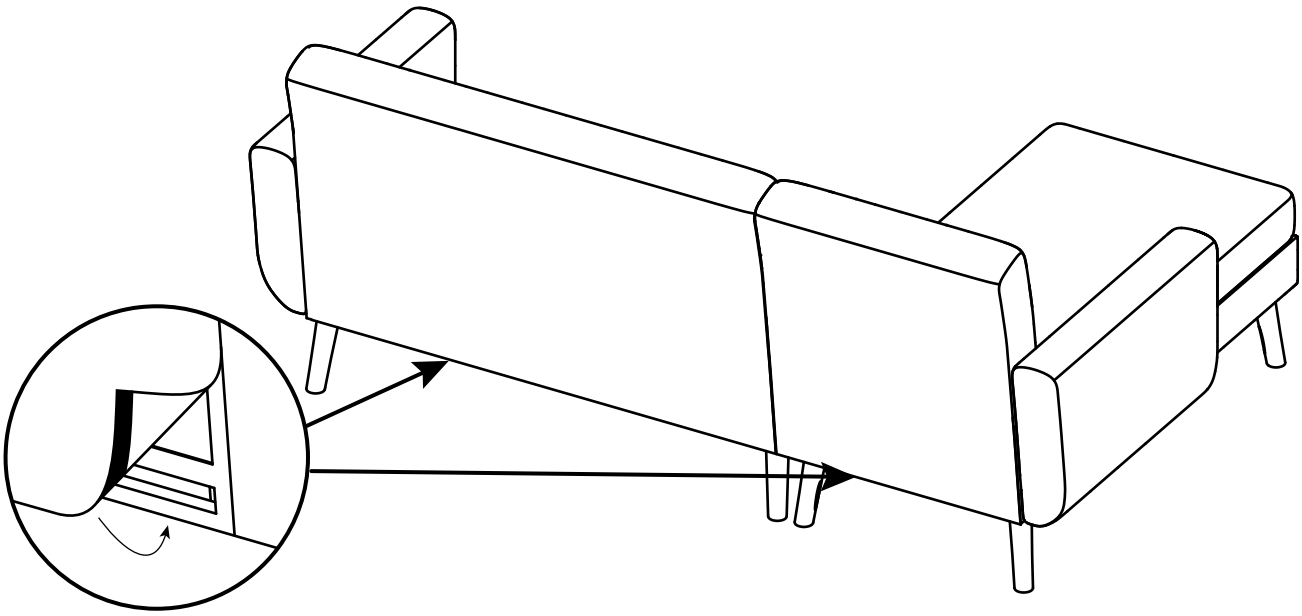

STEP-16

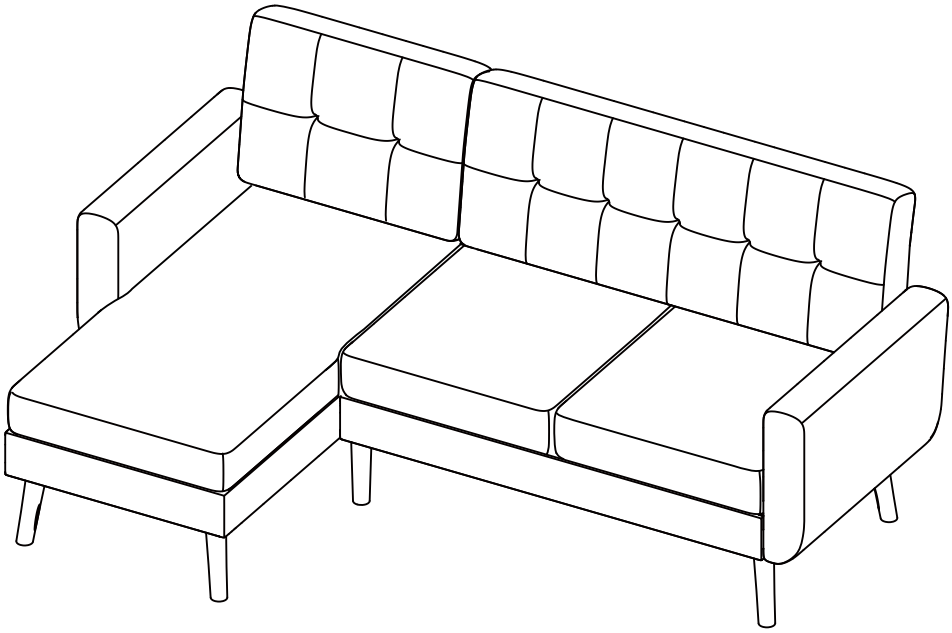

Installation Steps

Carton 1

Take out 3 side legs Q from the left handle, take out 2 middle legs P, 1 side leg Q.

STEP-1

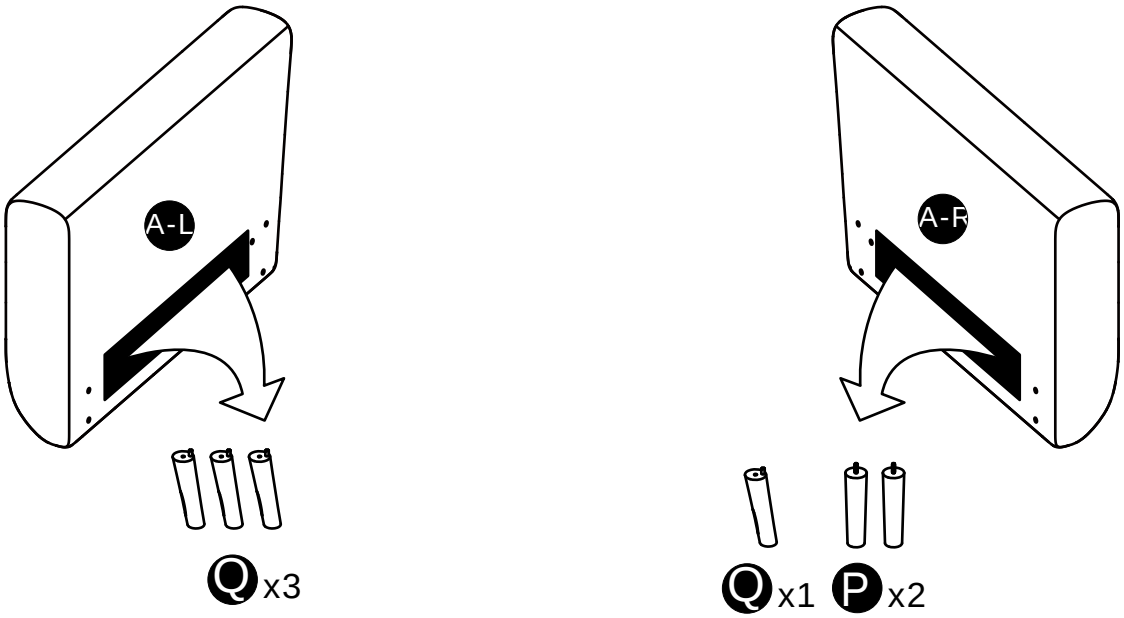

STEP-2 Screw A is used to fix angle iron C on the front panel G.

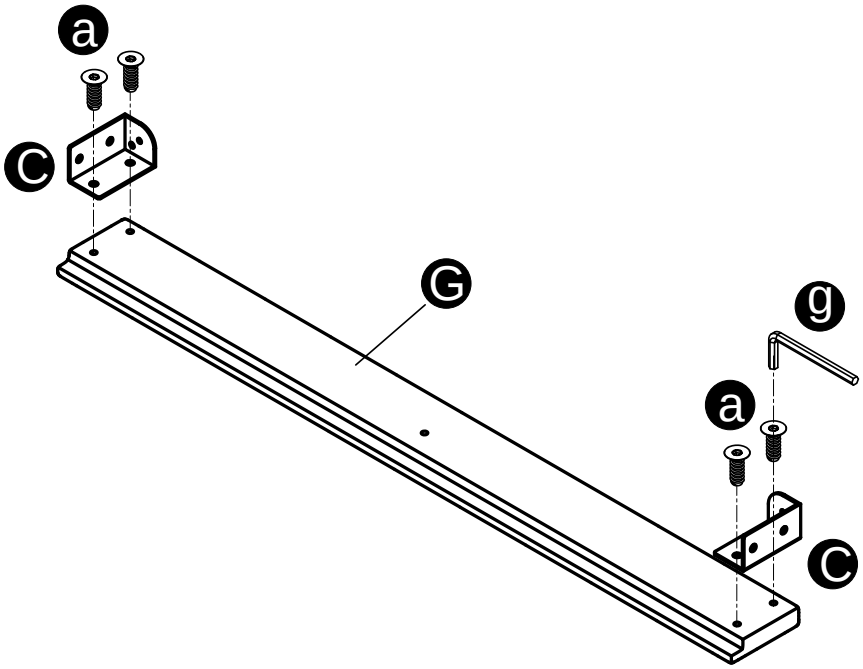

STEP-3 Screw a is used to fix the angle iron D-L/D- R to the back frame K.

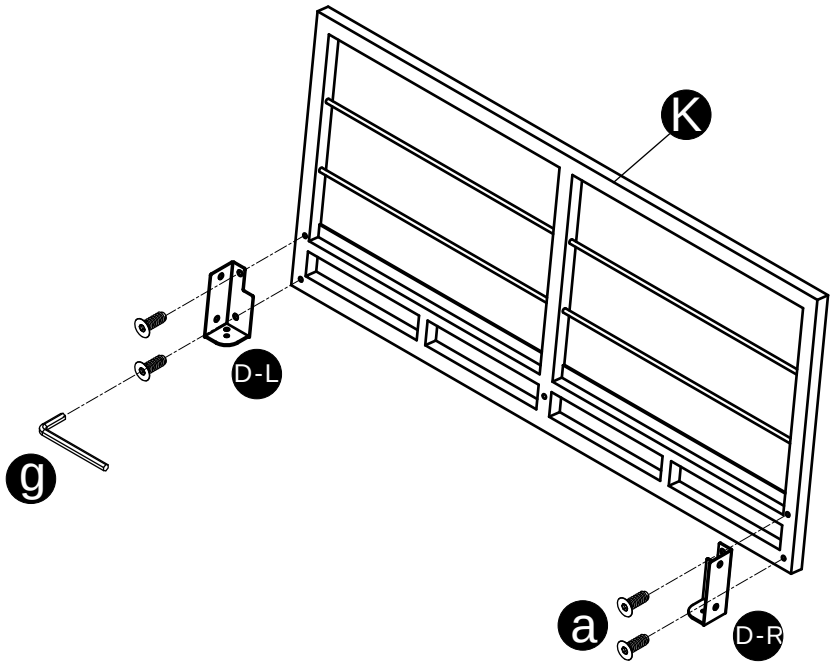

STEP-4 Use screw a to link the right handrail A-L with the assembled front panel G back frame K.

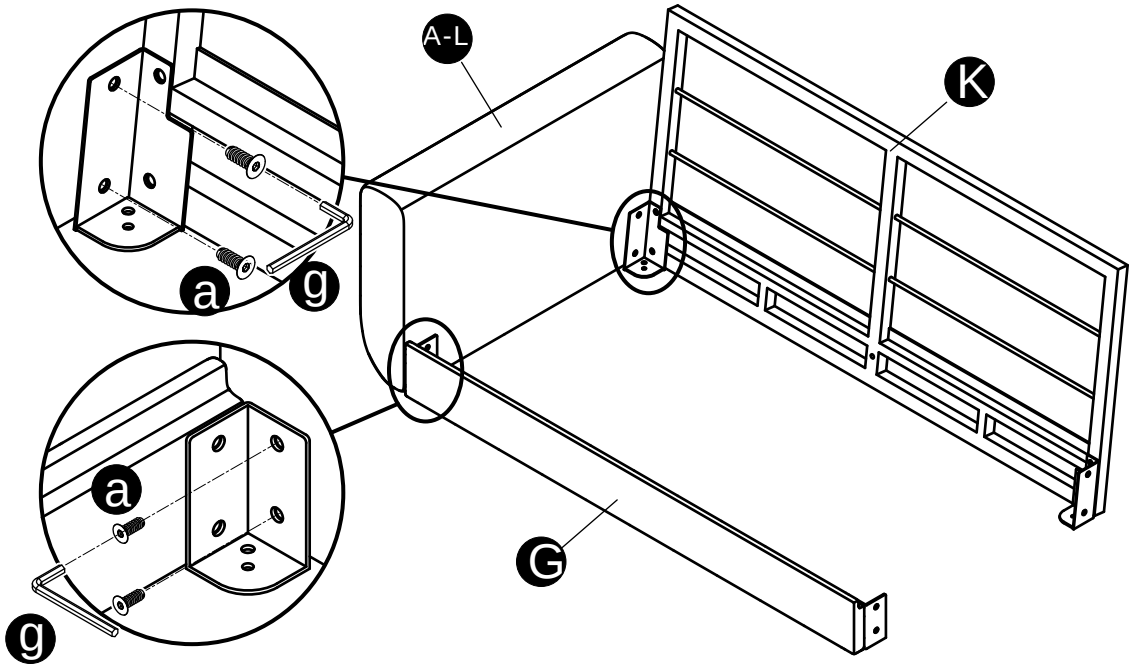

STEP-5 The connecting rod L is fixed to the back frame K and the front pane l with a screw a.

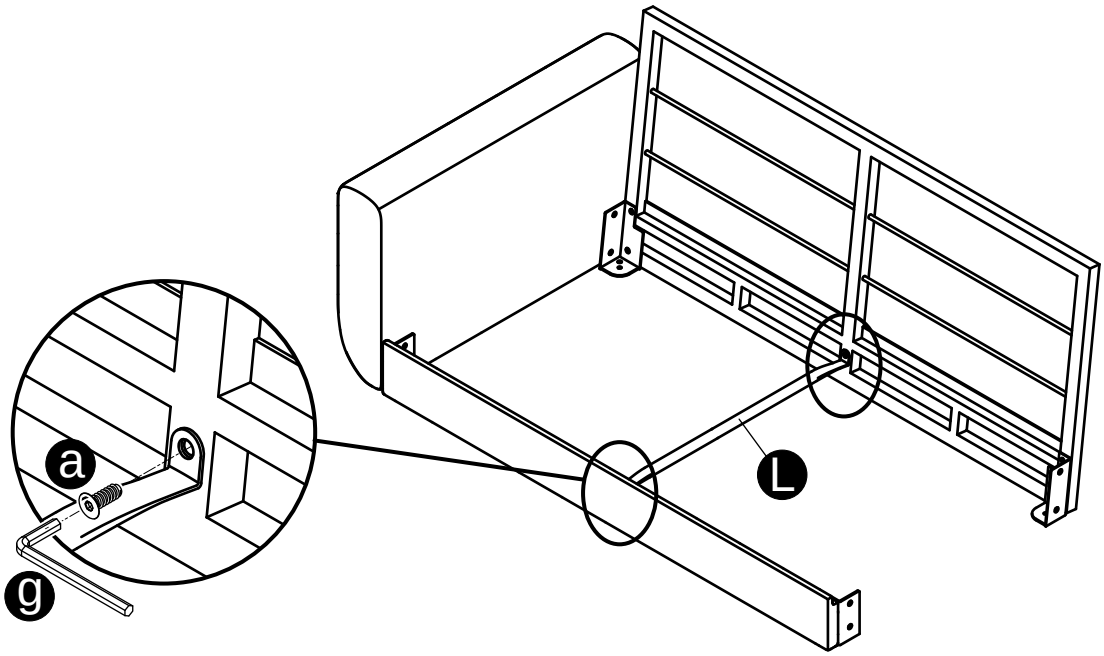

STEP-6 Use screw b to connect the back frame J with the seat frame F.

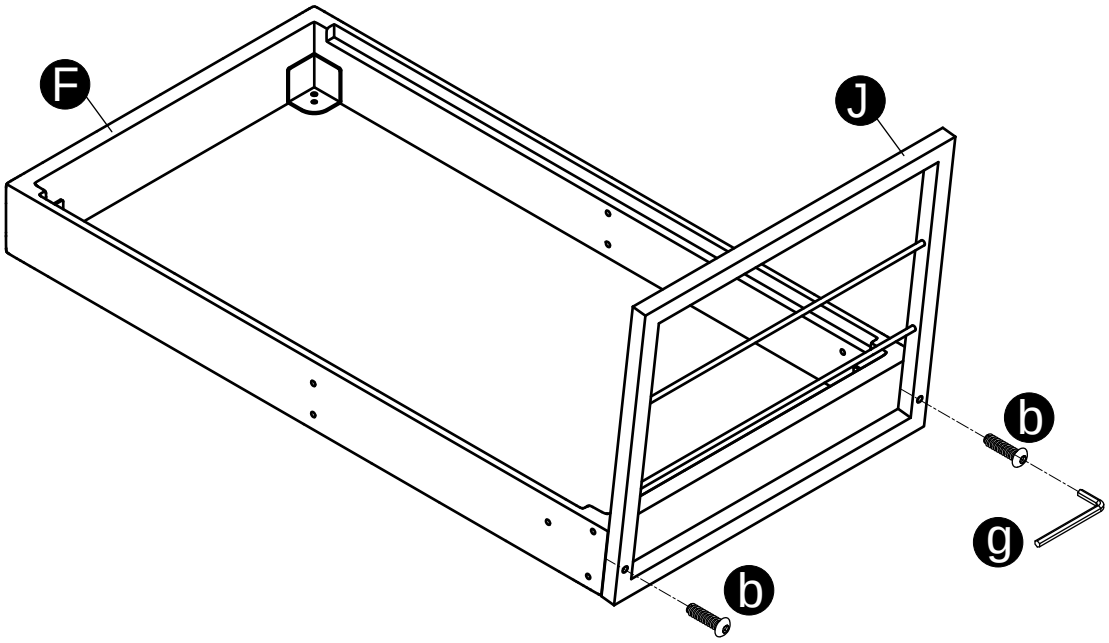

STEP-7 Use screw b to link the seat frame F with the left armrest A-R.

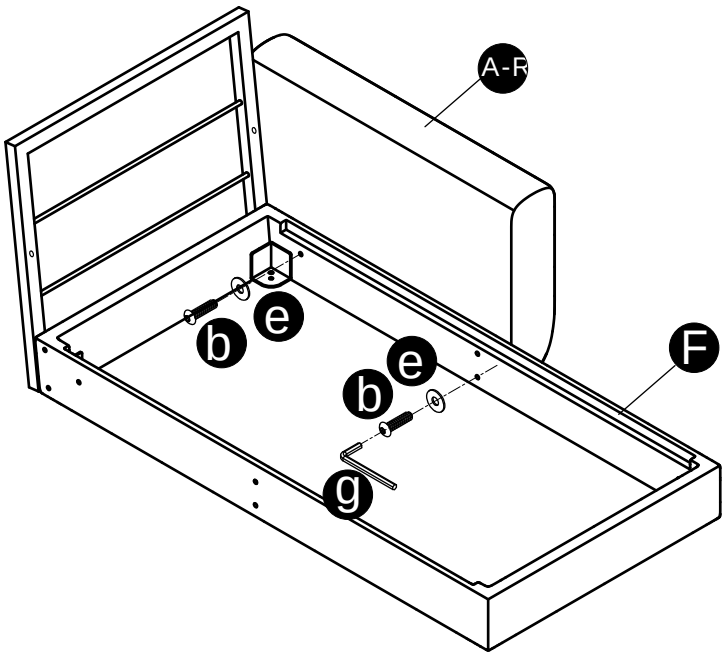

STEP-8 The back frame J and the left arm A-Rare fixed with the connecting part R and screw a.

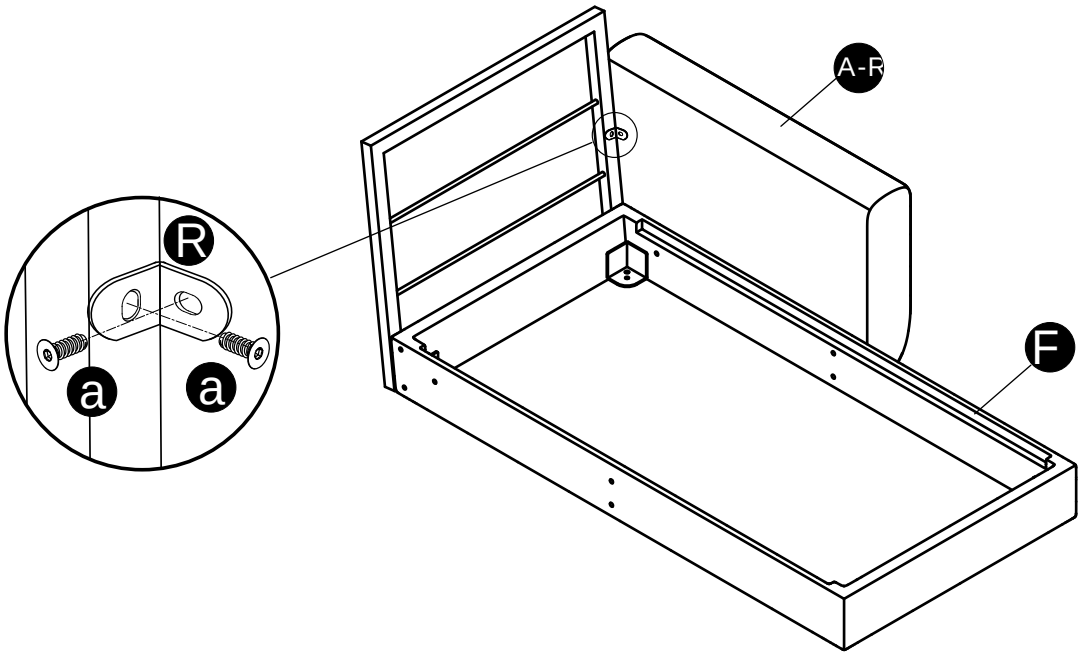

STEP-9 Connector M is fixed in the middle of the frame with screw d.

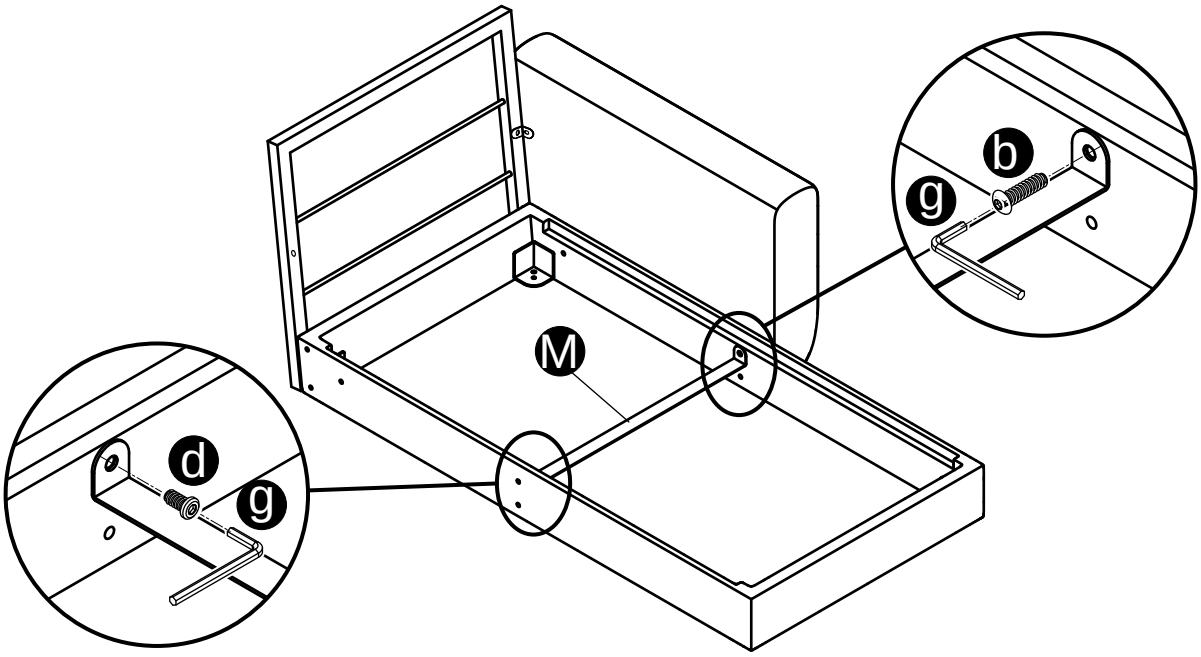

STEP-10 Then fix the assembled divan seat and the double seat with angle iron screws.

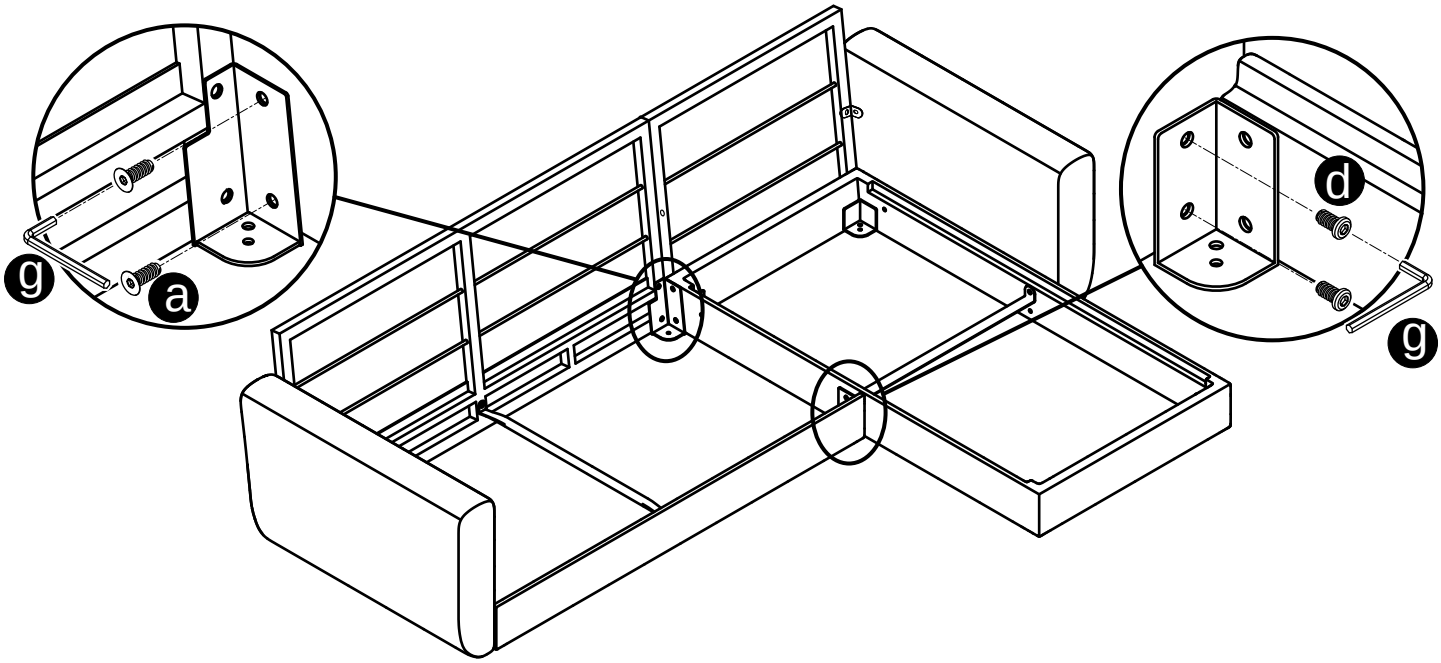

STEP-11 The side legs Q and the middle leg P are fixed to the bottom of the sofa using screw C.

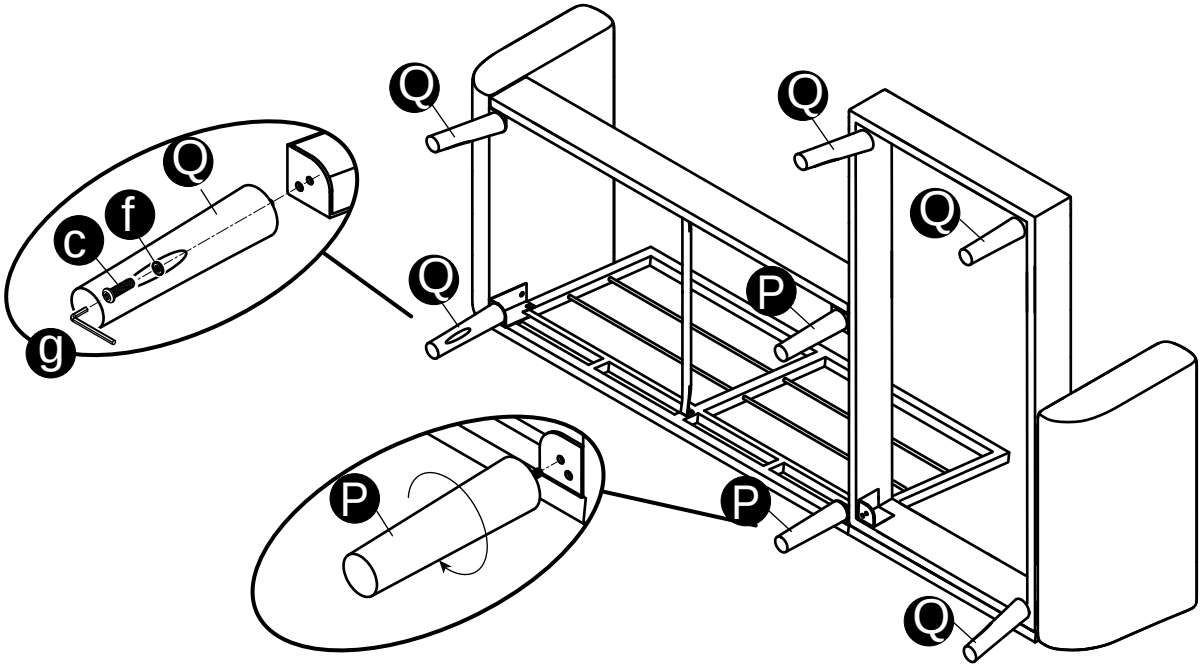

STEP-12 Board H should be placed on the divan seat, and board I should be placed on the double seat.

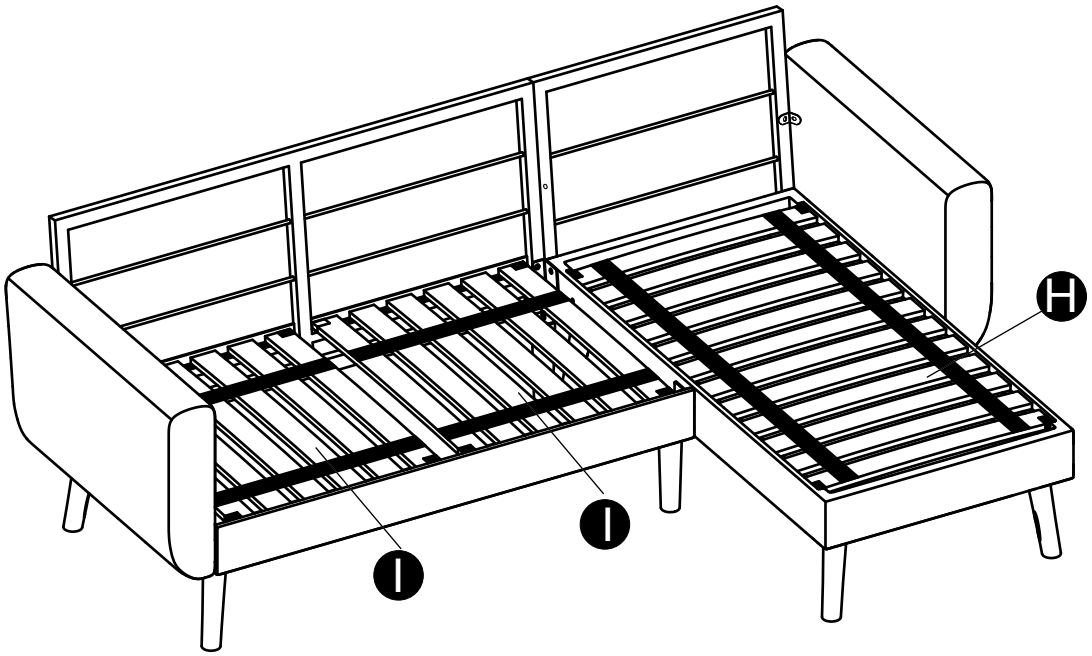

STEP-13 Place seat cushion N on the empress seat, and seat cushion E on the double seat.

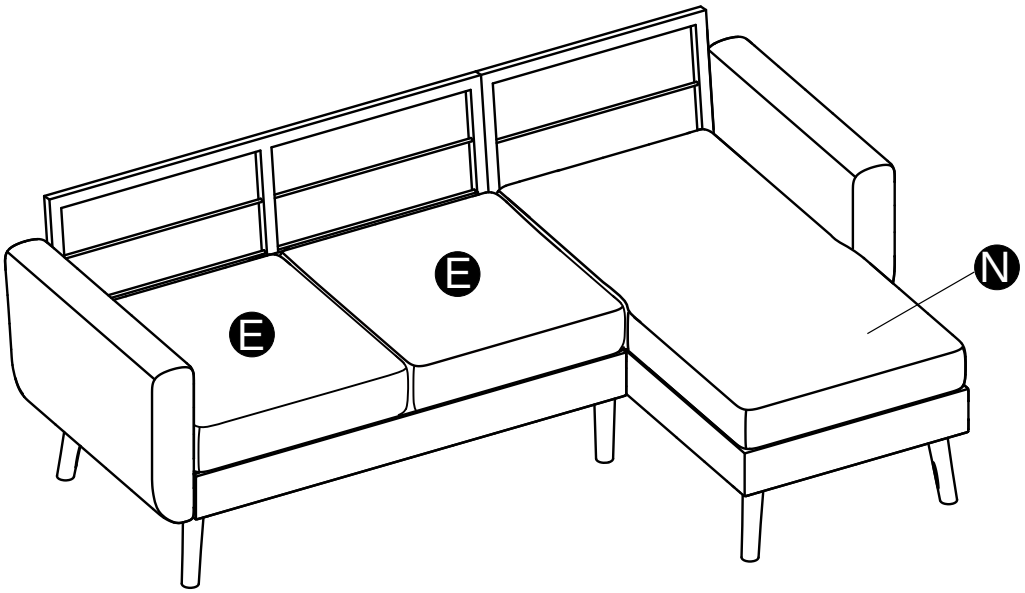

STEP-14 Put backpack B and O on the backrest.

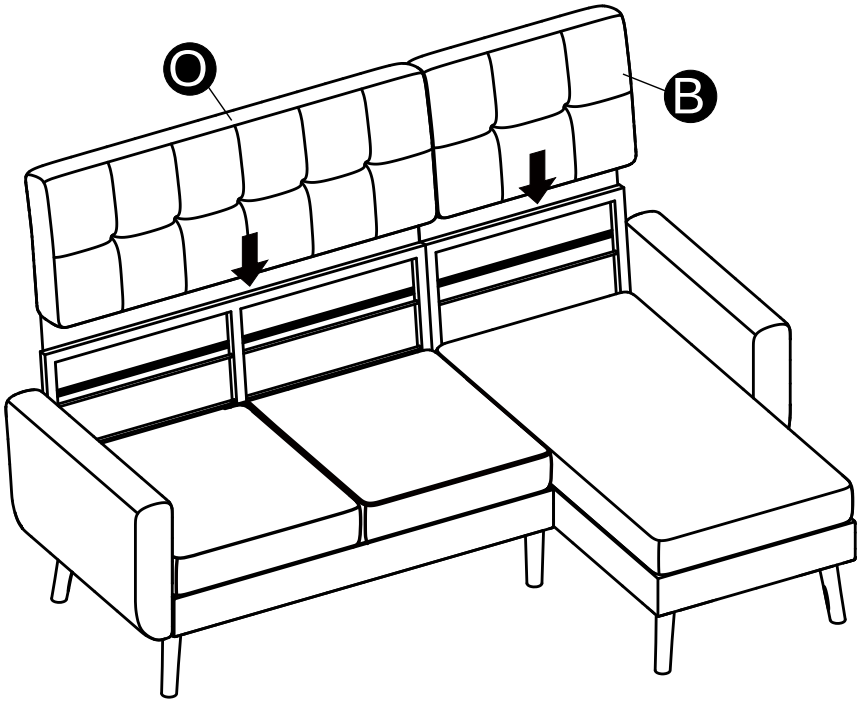

STEP-15 Glue the velcro on the back cover to the bottom of the back frame.

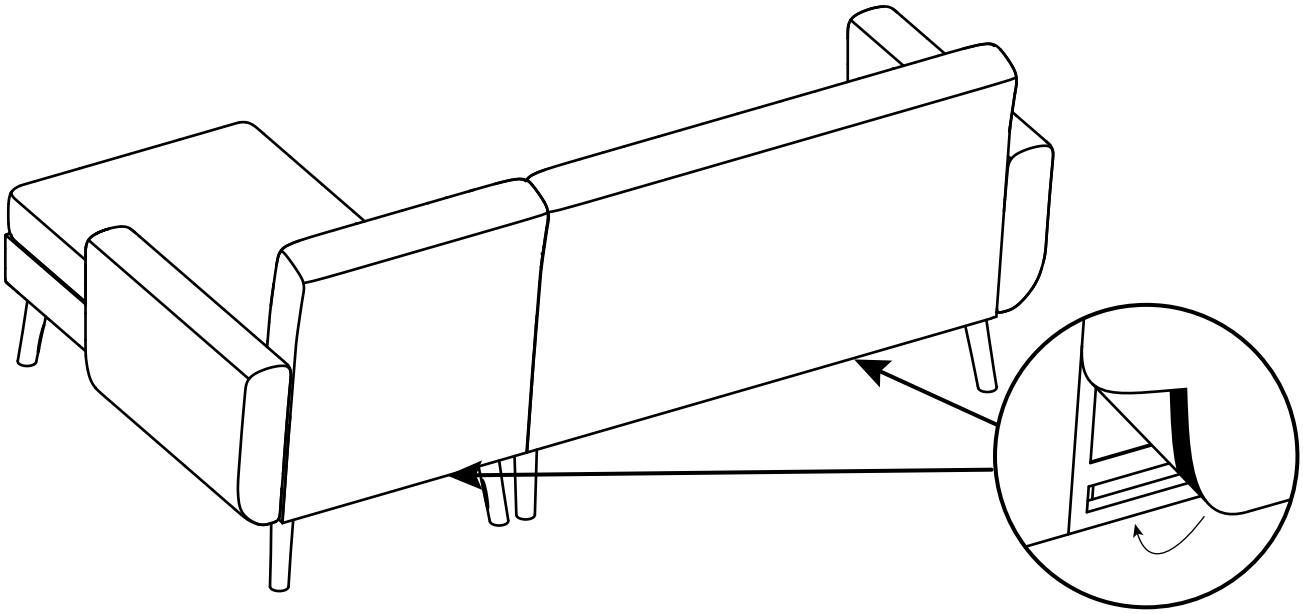

STEP-16

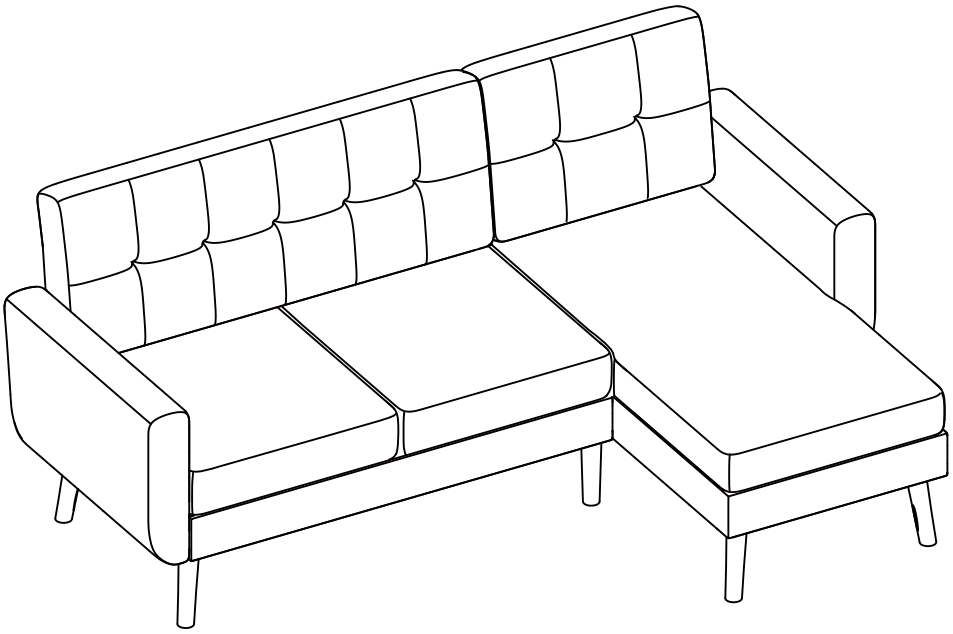

Multiple Configurations

The above line drawings only illustrate certain combination configurations of the modular sofa and do not represent the actual physical products.

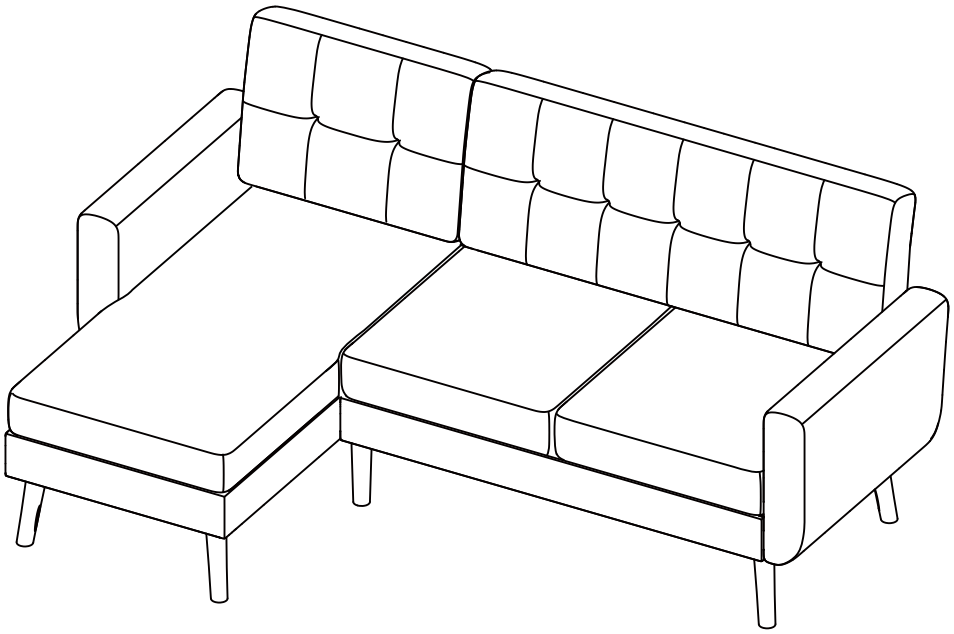

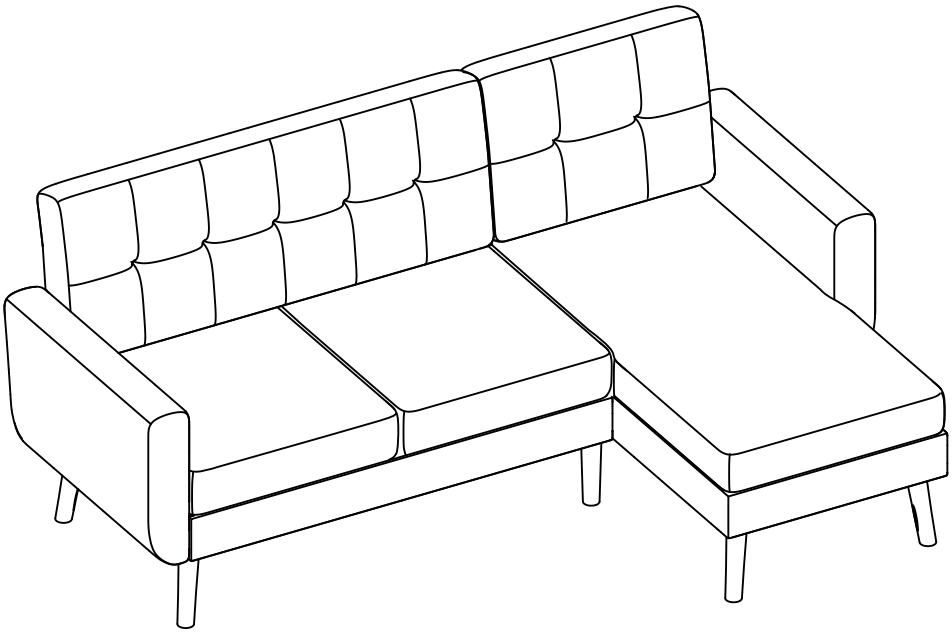

After Assembly
User Tips & Support

Frequently Asked Questions

1. What should I do if my shipment is damaged or the product is defective?

We are sorry for any inconvenience. Please contact us promptly and follow these steps:
Keep the original box (in case a return is needed).
Take photos of the damaged box, the damaged part(s) and the tracking number.
Send the photos to us so we can process a replacement or refund.

2. What should I do if a compressed product does not return to its original shape?

For safety during shipping, some products or cushions are packaged in a compressed form. We recommend allowing some time for the product to expand. Gently patting or fluffing the cushion can help speed up the process. If the issue persists, please contact our customer support team.

3.Return & Warranty Information

Returns:

If you are not satisfied with your purchase, you may initiate a return within **30 days** of receiving the product. Simply message us with your reason, and we will help facilitate the process. Please note that returns are accepted only for items in original, unopened condition with the original packaging retained.
All returns must use our provided return label and require prior authorization. Do not return the product without it.

Warranty:

We offer a 1-year manufacturer limited warranty for this upholstered sofa, effective from the date you receive your order.
During the warranty term, if any structural parts, hardware or original accessories arrive damaged or fail under normal household use, we will ship brand new replacement components completely free of charge with no extra cost.

Warranty Exclusions:

This warranty does not cover:
· Accidental damage, improper use, abuse, or man-made destruction;
· Normal wear and tear, stains, scratches, fading, and fabric aging over time;
· Damage caused by outdoor use, commercial use, or extreme environments;
· Unauthorized modification, disassembly, or self-repair of the product;
· Damage from improper installation, overloading, or pet damage.

Daily Care Instructions:

With proper care, your furniture will last for years. Please follow these guidelines:

- Keep the sofa away from direct sunlight, or use curtains/blinds to reduce exposure.
- Clean regularly with a dry, soft cloth or a vacuum with a soft attachment.
- For stubborn stains, gently blot with a soft cloth dipped in warm water and mild soap, then dry with a clean cloth.
- Avoid excessive rubbing, as it may damage the weave or cause discoloration.
- Place felt pads under the sofa to prevent floor scratches. A rug underneath also adds protection and style.
- Distribute weight evenly on the cushions over time for optimal care.
- When moving the furniture, always lift it rather than dragging it across the floor. Dragging can damage legs, joints, and flooring.
- Keep sharp objects away from the fabric or leather surface to prevent snags, tears, or scratches.

NOTICE

PERIODIC STRUCTURAL CHECK:
Daily use can cause connection joints to loosen over time. For long-term stability and safety, periodically check and retighten all bolts, screws, and hardware connectors every 3 to 6 months.

⚠ WARNING

PROHIBITED MISUSE:
Do not stand, jump, or sit on the armrests or backrest of this sofa. The product is designed for sitting purposes only. Improper use may cause the furniture to tip over, break, or result in personal injury.
NO POWER TOOLS:
Do not use high-torque power drills to assemble this product. Power tools can easily strip the hardware threads, split the inner wooden frame, or tear the fabric. Use the provided hand tools only.

How do I contact you if I encounter problems?

Just send us a message or email us at:
✉ xlmcustomerservice@gmail.com
We aim to respond within 24 hours.

Thank you for choosing us. We look forward to welcoming you back soon!