QUEEN BED
Assembly Manual
KJW.B008

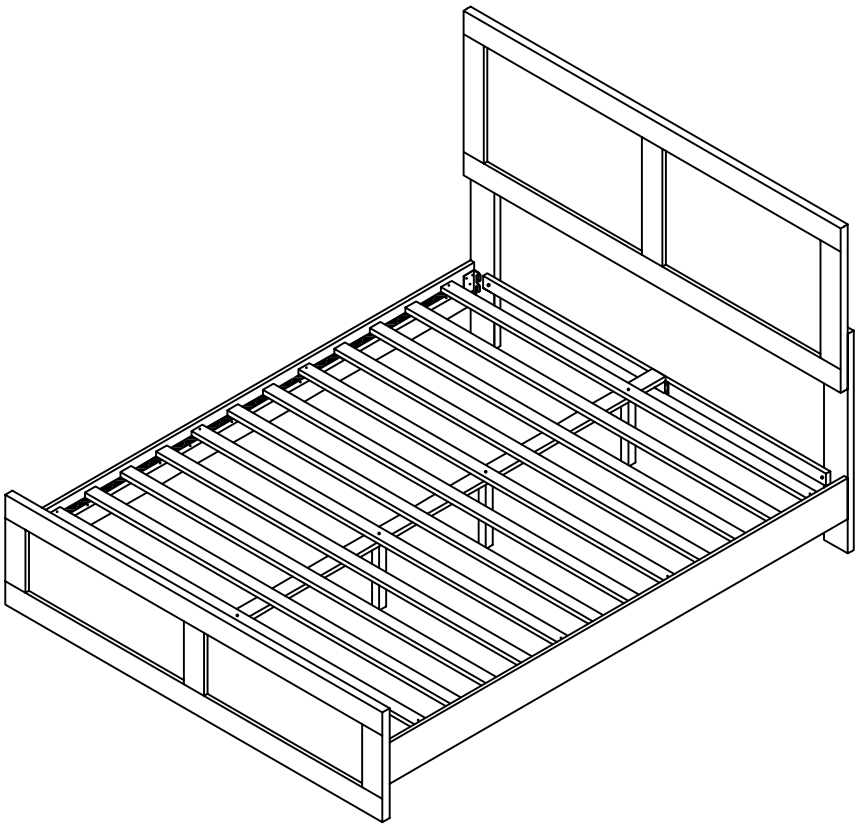

⚠ CAUTION

THIS ASSEMBLY MANUAL CONTAINS IMPORTANT SAFETY INFORMATION.
PLEASE READ AND KEEP FOR FUTURE REFERENCE.

ASSEMBLY INSTRUCTIONS

Read these instructions carefully and keep for future reference. Refer to parts inventory for guidance, and ensure you have all pieces before starting.

When assembling, place all parts on a soft, clean, and flat surface such as a carpet to prevent scratches.

Structural integrity is only guaranteed if all bolts are installed and properly tihgtened.



TIME

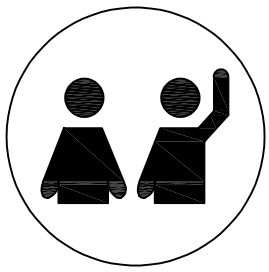

2 OF PEOPLE

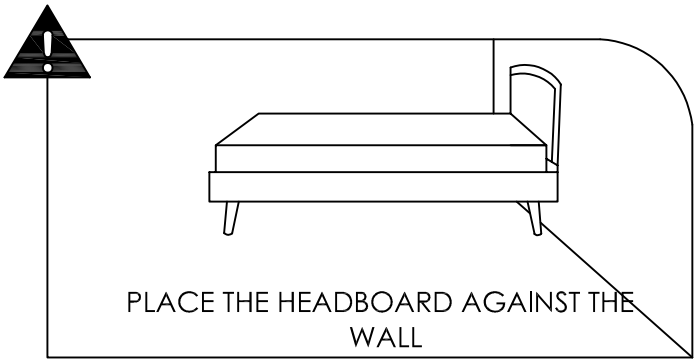

PLACE THE HEADBOARD AGAINST THE WALL

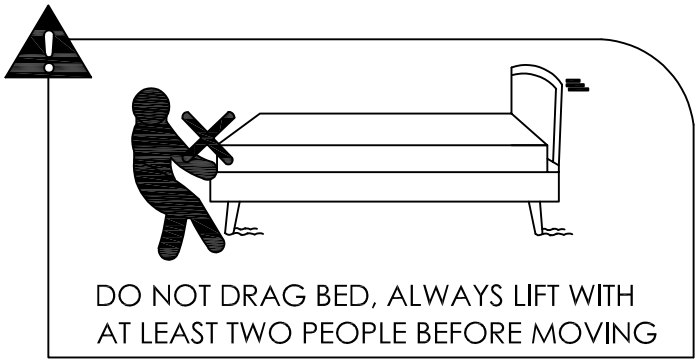

DO NOT DRAG BED, ALWAYS LIFT WITH AT LEAST TWO PEOPLE BEFORE MOVING

Part List

1 x1 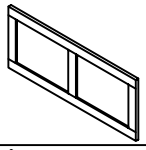 Headboard	2 x1  Left Side Leg Panel	3 x1  Right Side Leg Panel	4 x2 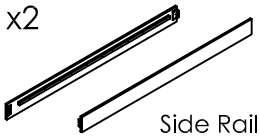 Side Rail Panel
5 x1 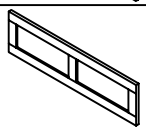 Footboard	6 x12 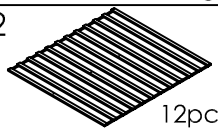 12pcs Slats	7 x1 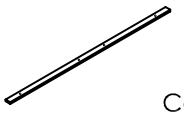 Center Rail	8 x4 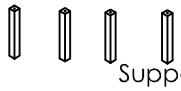 Support Legs
9 x1 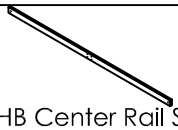 HB Center Rail Support			

Hardware

A x1 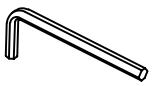 Allen Key M4	B x1  Allen Key M5	C x8 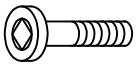 JCBB M8 X 20	D x4  Adjuster
E x16  CSK M3.5 x 16 mm	F x8 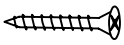 CSK M4 x 32 mm	G x4  JCBC Screw 50mm	H x8  JCBC Screw 40mm
I x4  White Nail	J x2 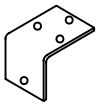 L Bracket	K x2  U Bracket	L x2 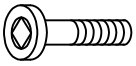 JCBC M6 X 30
Not Included  Mallet	Not Included 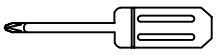 Philips Head Screwdriver		

Extra Hardware

x1 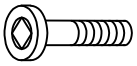 JCBB M8 X 20	x1  White Nail	x1  CSK M3.5 x 16 mm	x1 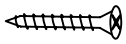 CSK M4 x 32 mm
x1  JCBC Screw 50mm	x1  JCBC Screw 40mm	x1 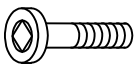 JCBC M6 X 30	

Please read through the instructions below to familiarize yourself with the parts and steps before assembly.

Before you begin:
1.Check if you have received all parts using the diagram on this page. Do not start the assembly process until all parts are present.

2.Do not discard any of the packaging until you are certain that you have all the necessary parts for the assembly.

ASSEMBLY INSTRUCTION

1 Please lay all parts on a soft and smooth surface to assemble.

BOX 1

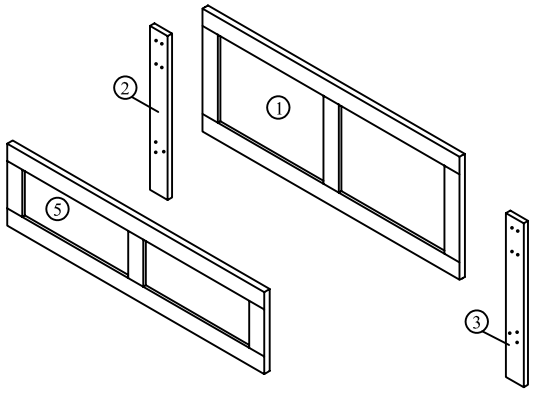

BOX 2

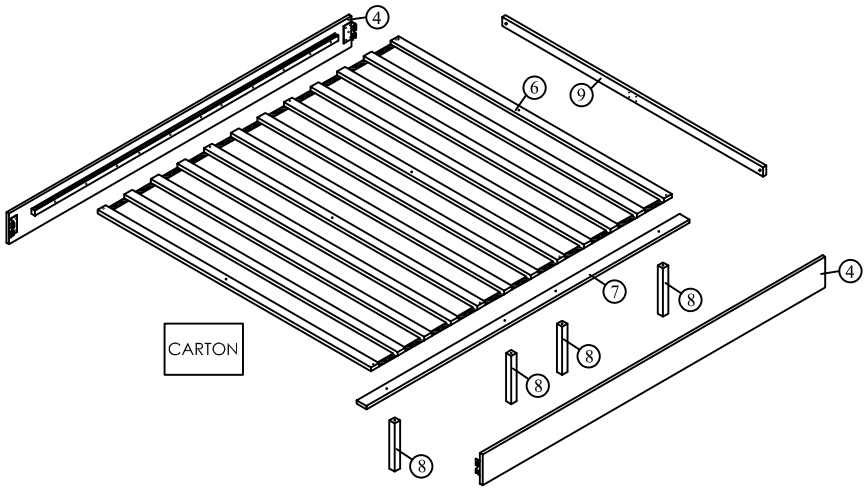

CARTON

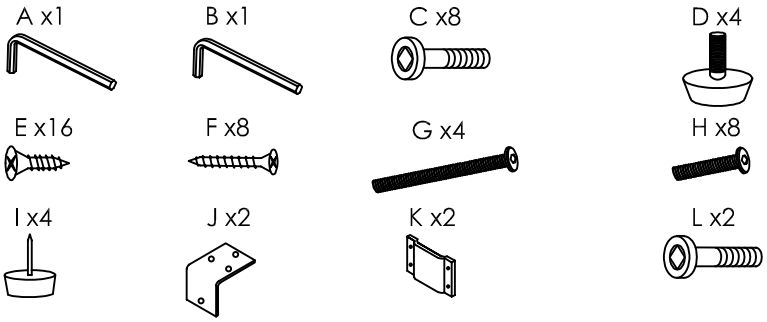

ASSEMBLY INSTRUCTION

2 Attach U Bracket (K) to Footboard (5) and HB Center Rail Support (9),using CSK M3.5 x 16 mm (E).Attach L Bracket (J) to Center Rail (7) using CSK M3.5 x 16 mm (E).

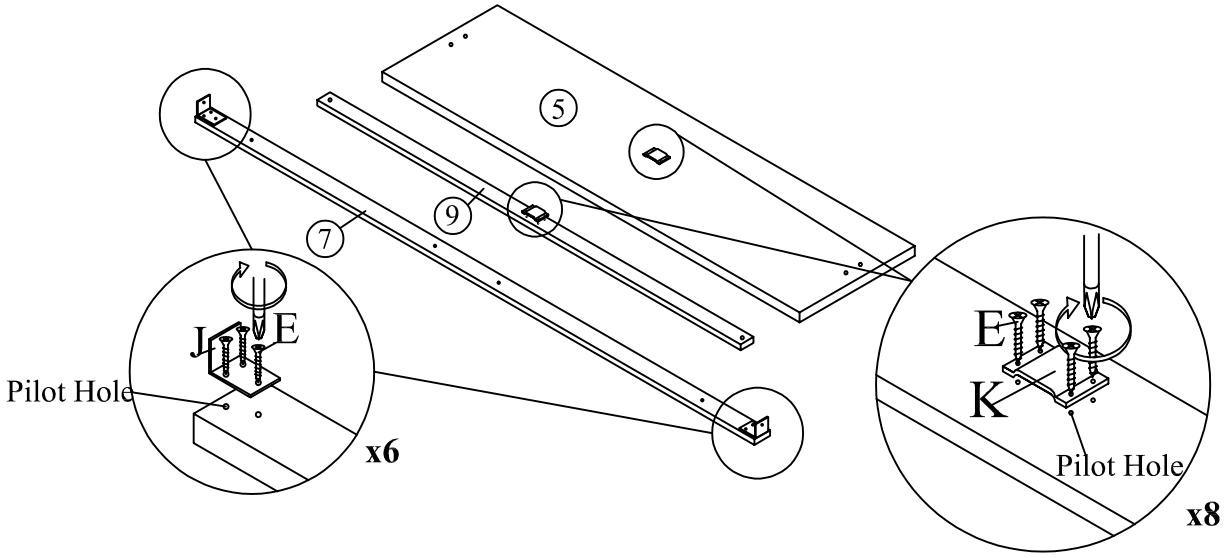

3 Attach White Nail (I) using mallet at the bottom of the panels.(Arrow label must be upper way).

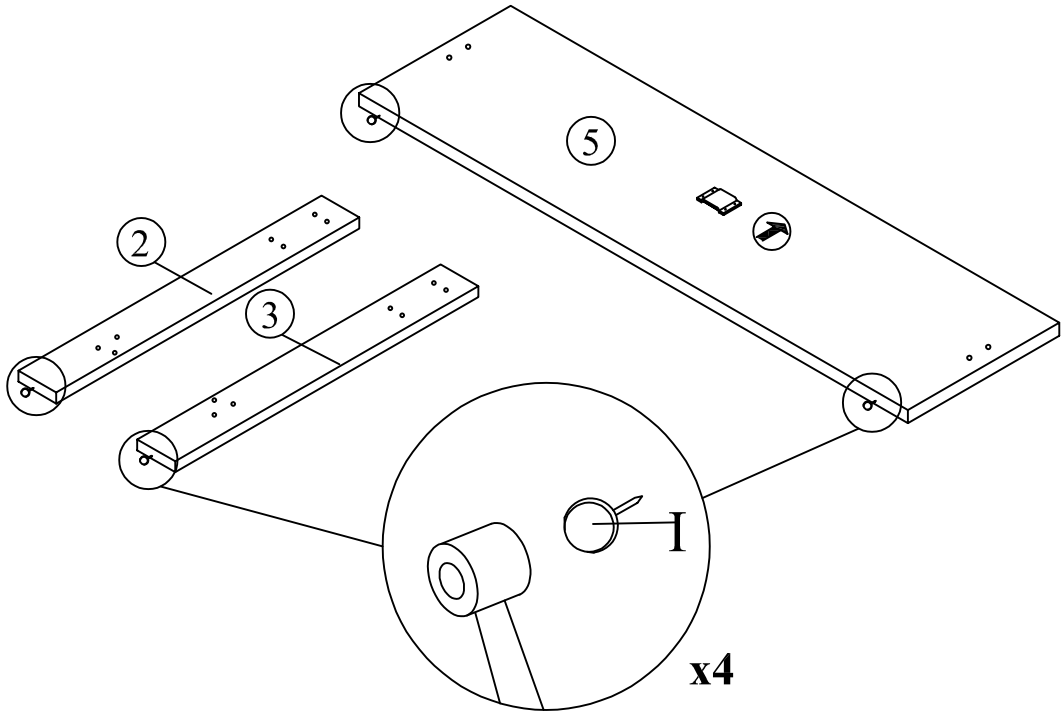

ASSEMBLY INSTRUCTION

4 Attach Left Side Leg Panel (2) and Right Side Leg Panel (3).Tighten JCBC Screw 40mm (H) using Allen Key M4 (A).

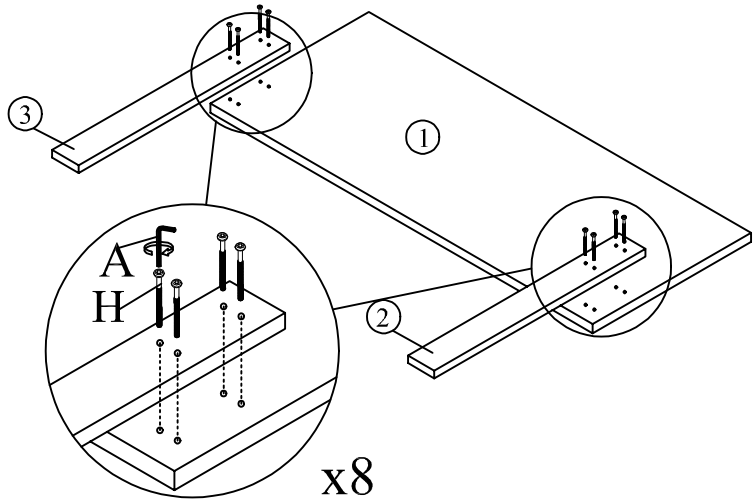

x8

Back View

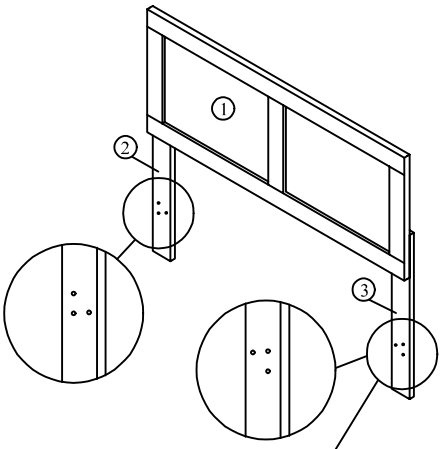

The 3 holes at Left Side Leg Panel (2) and Right Side Leg Panel (3) face to front view.

5 Attach Side Rail (4) to Left Side Leg Panel (2) and Right Side Leg Panel (3) by using JCBB M8 x 20 (C), and M5 Allen Key (B).**Do not tighten (C) completely until STEP 9**. Then, pushing the bracket down to fit it.

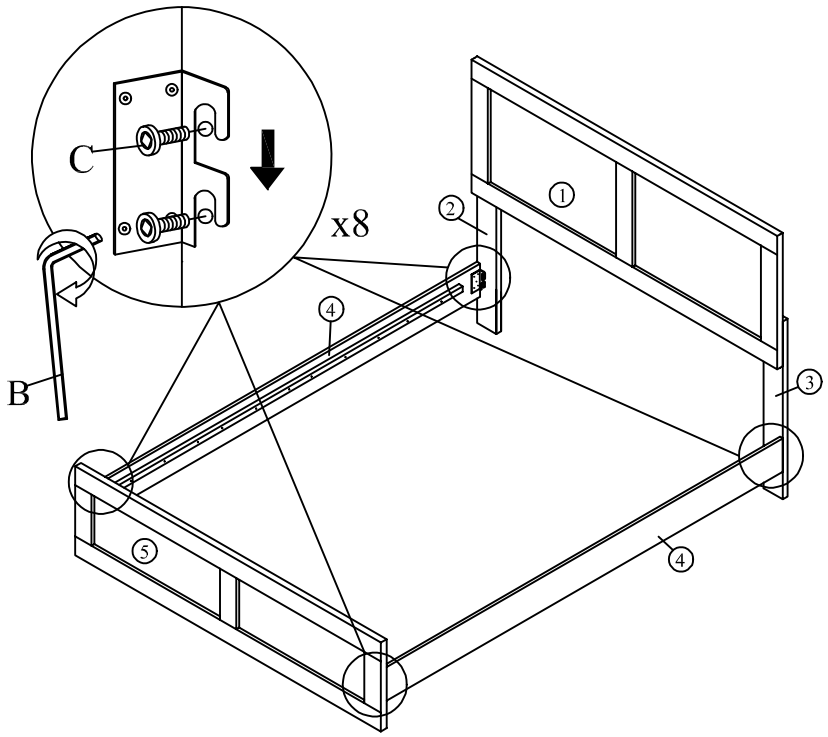

ASSEMBLY INSTRUCTION

6 Attach HB Center Rail Support (9) to Left Side Leg Panel (2) and Right Side Leg Panel (3).Tighten JCBC M6 X 30 (L) using Allen Key M4 (A).

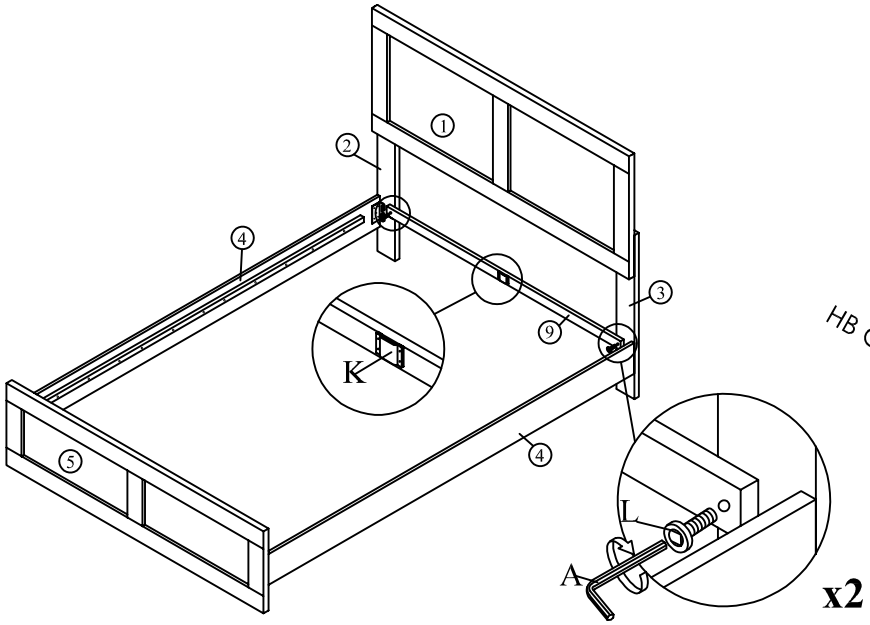

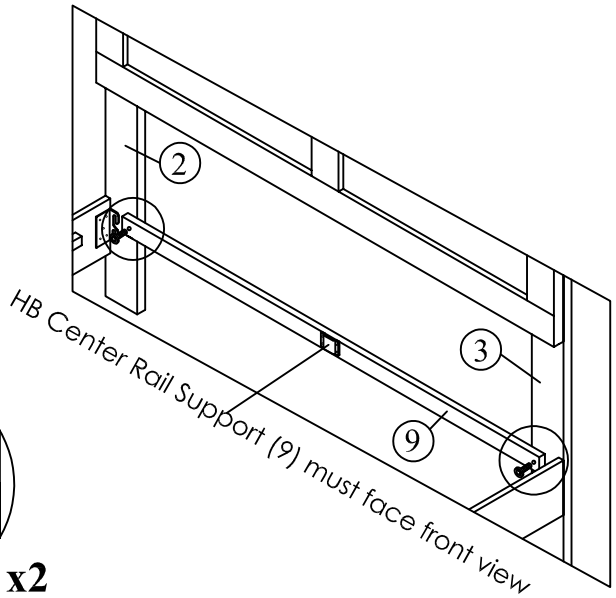

7 Attach Slats (6) to Center Rail (7).Tighten JCBC Screw 50mm (G) using Allen Key M4 (A).

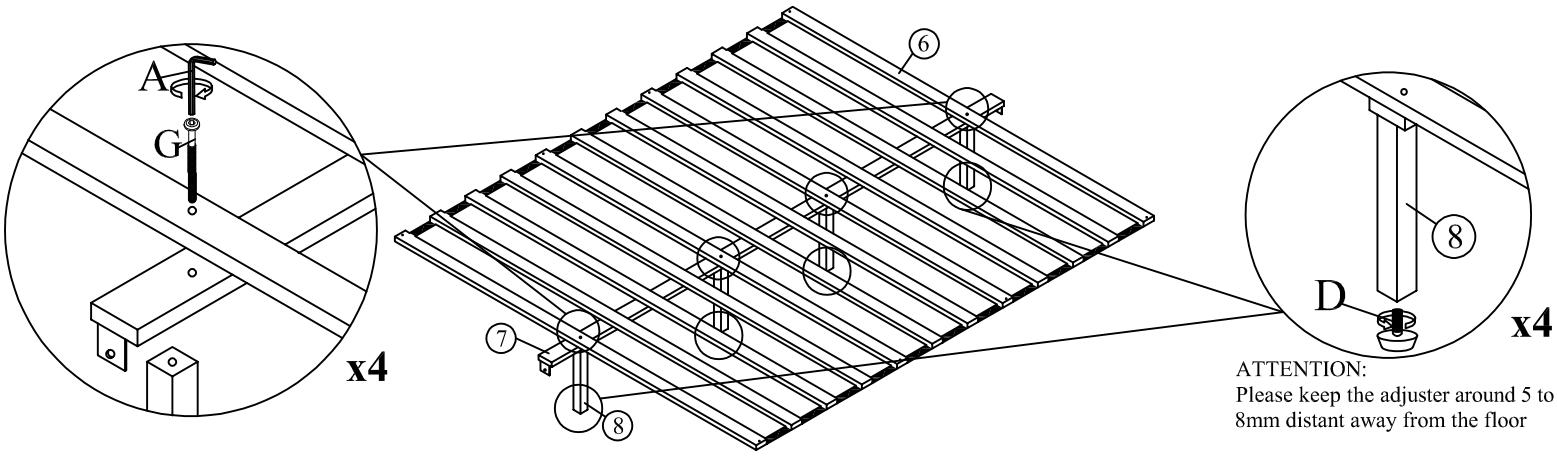

ASSEMBLY INSTRUCTION

8 Slide the Center Rail (7) to the HB Center Rail Support (9) and Footboard (5). Tighten CSK M3.5 x 16 mm (E) using screw driver (not included).

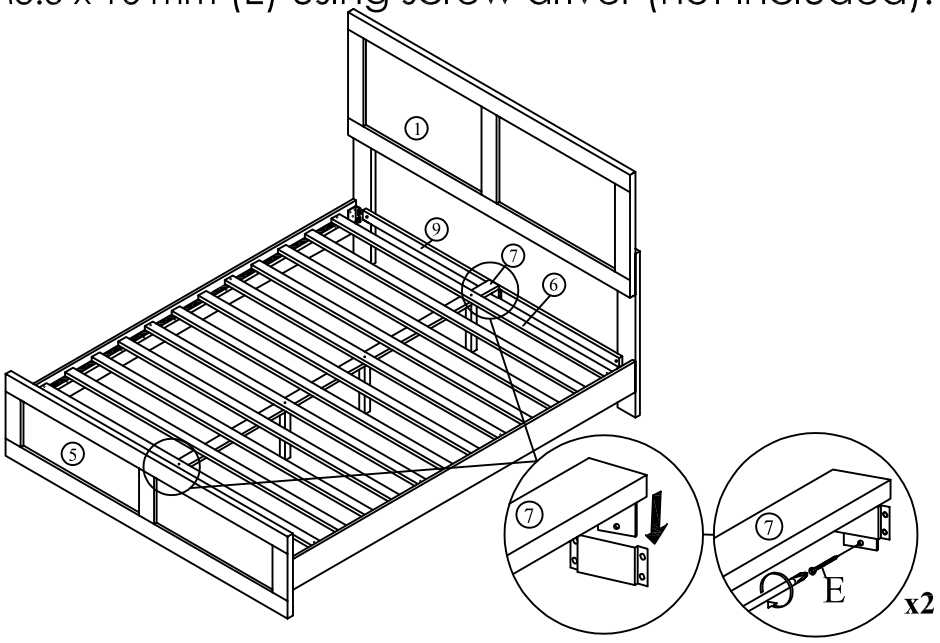

9 Affix the Slat (6) to the side rail support wood and the center rail (7). Tighten CSK M4 x 32 (F) using screw driver (not included).

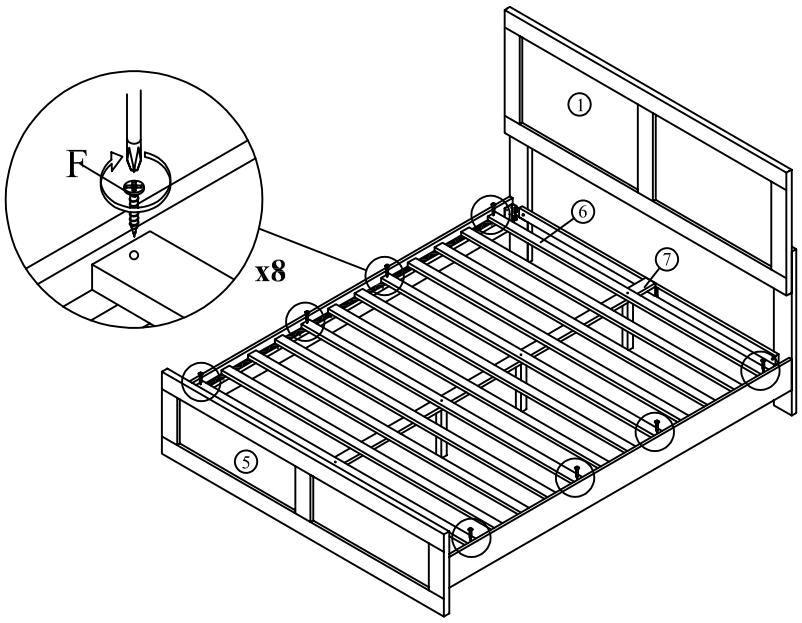

ASSEMBLY INSTRUCTION

⑩ Tighten all the 4 corner using M5 Allen Key (B). Assembly is Complete.

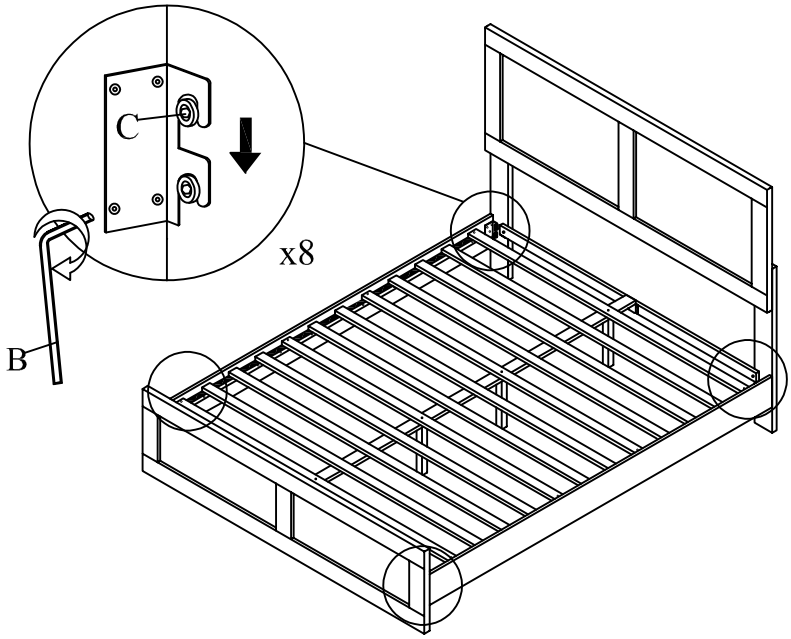

Design Exquisite Furniture For Your Home

PRODUCT WARRANTY

- 1-year limited on cover against splitting, peeling, and/or tearing.
- 1-year limited on internal and external frame structure.

Contact us:

We make all efforts to guarantee that the products you receive are in excellent condition. If there are any parts missing or damaged, the Customer Service Team will be happy to provide free replacements for you.We have professional warehouses where the current inventory of parts is enough so that they will arrive in your hands as fast as possible.

Assistance with assembly or product details is available; don't hesitate to get in touch with us to get priority service.
Our E-mail address: CS.furniture@outlook.com.



CS.furniture@outlook.com.