ASSEMBLY INSTRUCTION

Dining Bench

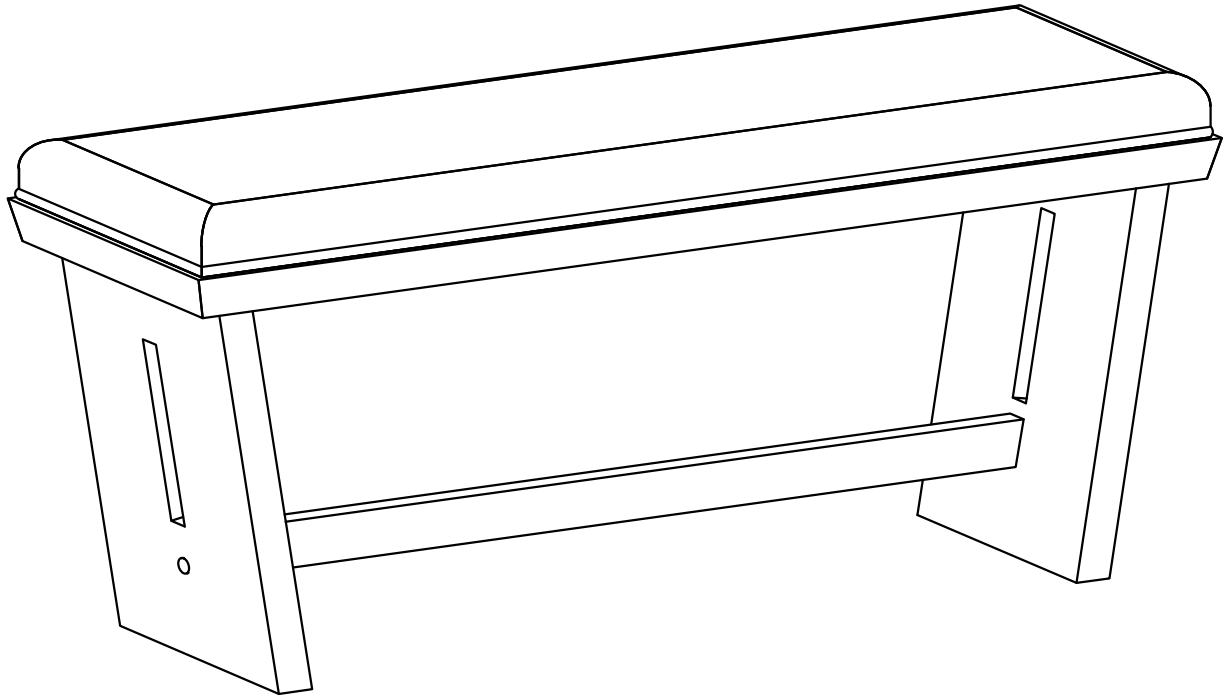

ASSEMBLY INSTRUCTIONS

Please read these instructions fully before starting assembly：

1. Place all wooden parts on a clean and smooth surface such as a rug or carpet to avoid scratching the parts.

2. Kindly follow the assembly instructions step by step.

3. Do not tighten all screws and bolts until the stool is fully assembled.

4. Unscrew the protective plastique supports from the metal insert of the table legs before assembly.

5. Parts of the assembly will be easier with 2 people.

Care and maintenance：

Only clean using a damp cloth and mild detergent, do no use bleach or abrasive cleaners.

ASSEMBLY INSTRUCTION

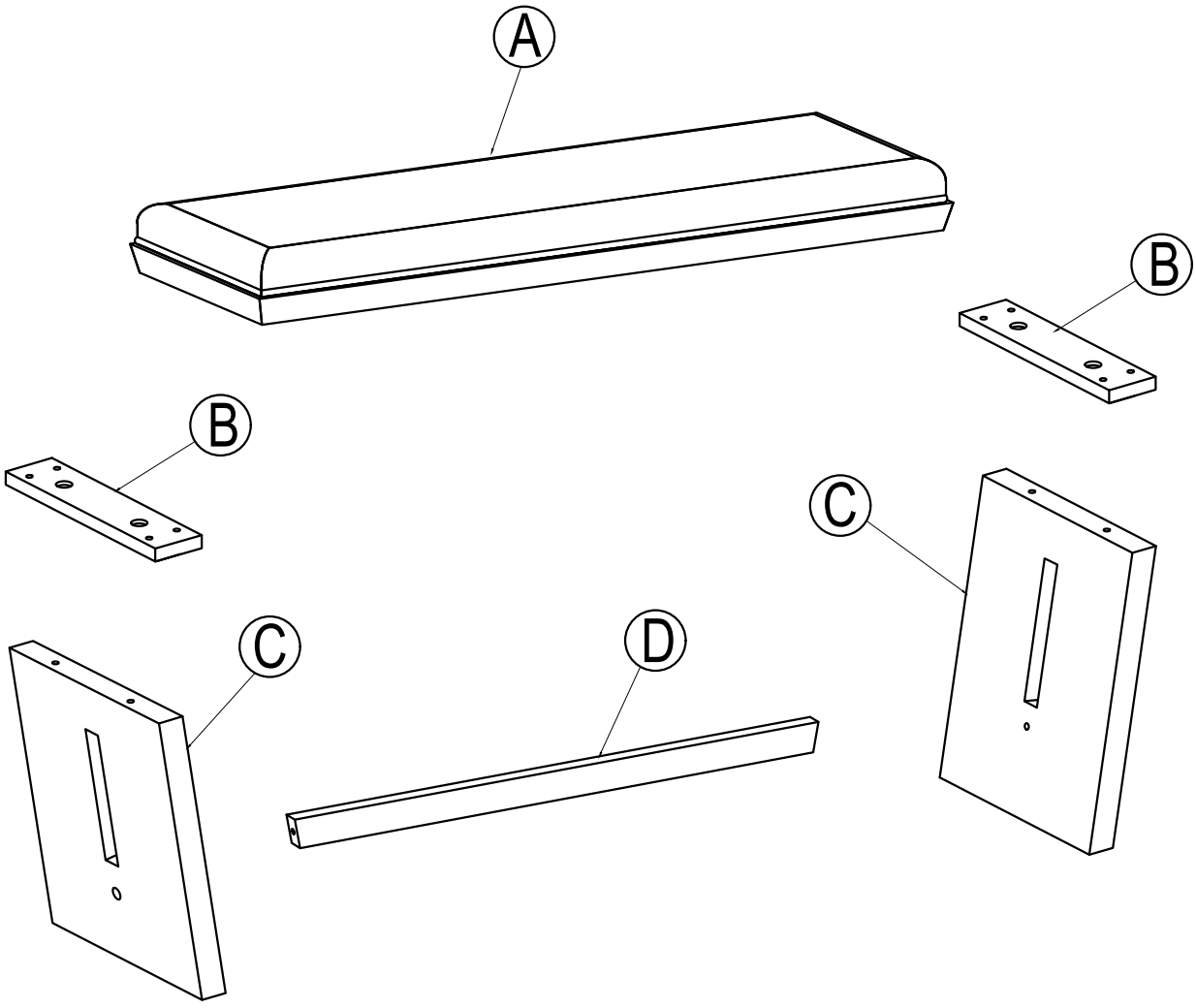

ASSEMBLY INSTRUCTION

Part List

Ⓐ

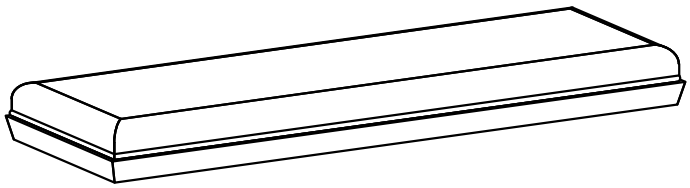

CUSHION SEAT (1 pc)

Ⓑ

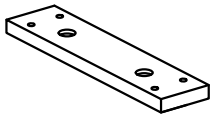

PANEL TOP LEG (2 pcs)

Ⓒ

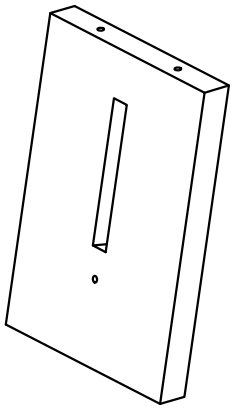

LEG (2 pcs)

Ⓓ

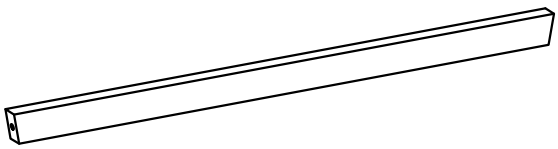

STRETCHER (1 pc)

ASSEMBLY INSTRUCTION

Hardware List

① 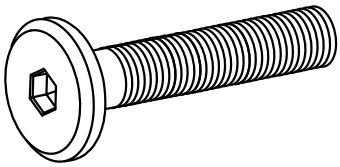 Ø 5/16" x 35 mm	② 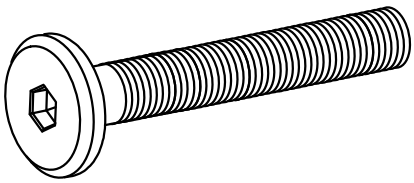 Ø 5/16" x 50 mm
BOLT (12 pcs)	BOLT (2 pcs)
③ 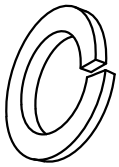 Ø5/16" x 13 mm	④ 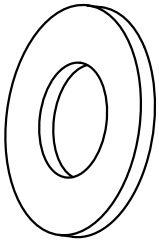 Ø5/16" x 16 mm
FLAT WASHER (14 pcs)	LOCK WASHER (12 pcs)
⑤  4 mm	⑥ 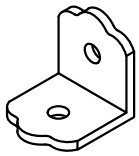 19 x 18 x 1.5 mm
ALLEN KEY (1 pc)	PATCH V (2 pcs)
⑦  Ø 3.5 x 15mm	⑧ 
WOOD SCREWS (4 pcs)	WOOD PLUG (2 pcs)

ASSEMBLY INSTRUCTION

STEP 1:

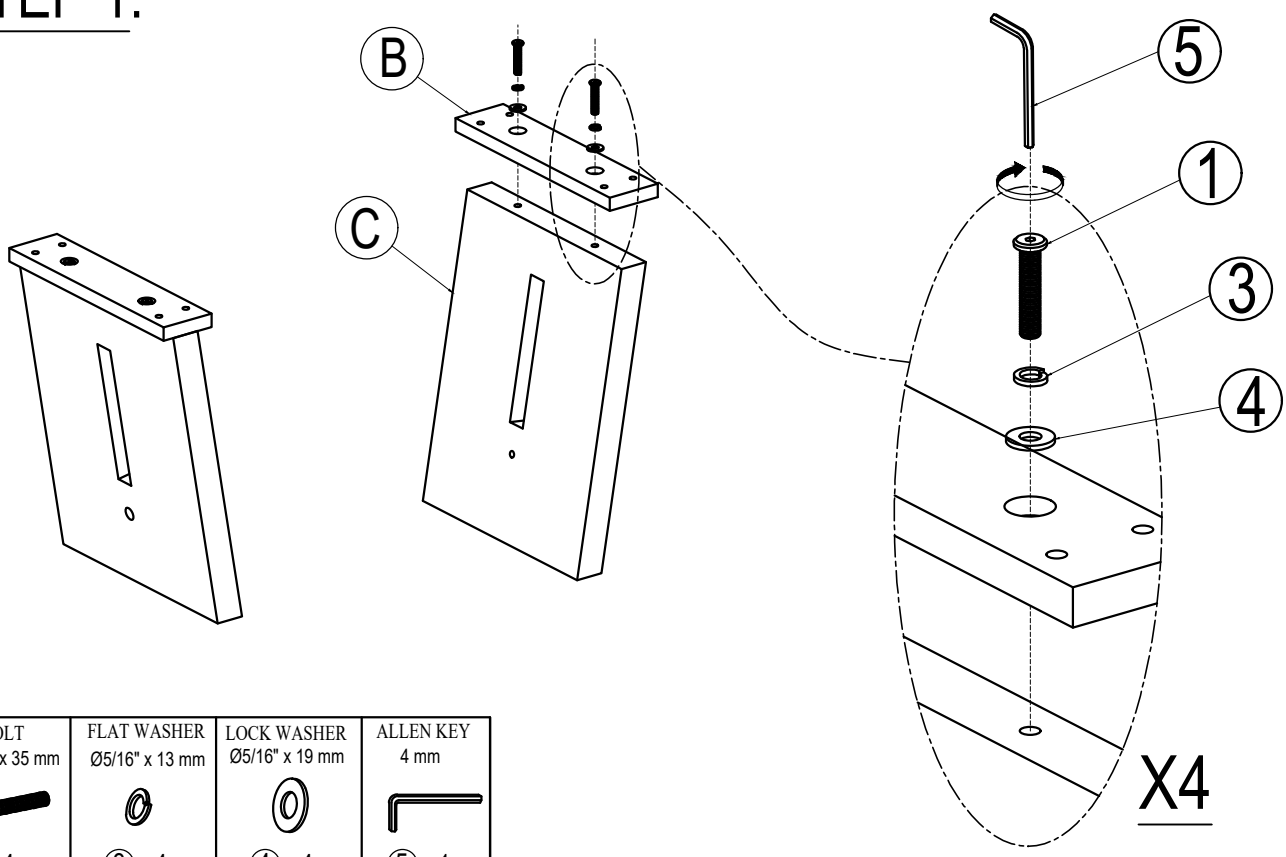

BOLT Ø 5/16" x 35 mm	FLAT WASHER Ø5/16" x 13 mm	LOCK WASHER Ø5/16" x 19 mm	ALLEN KEY 4 mm
①x 4	③x 4	④x 4	⑤x 1

STEP 2:

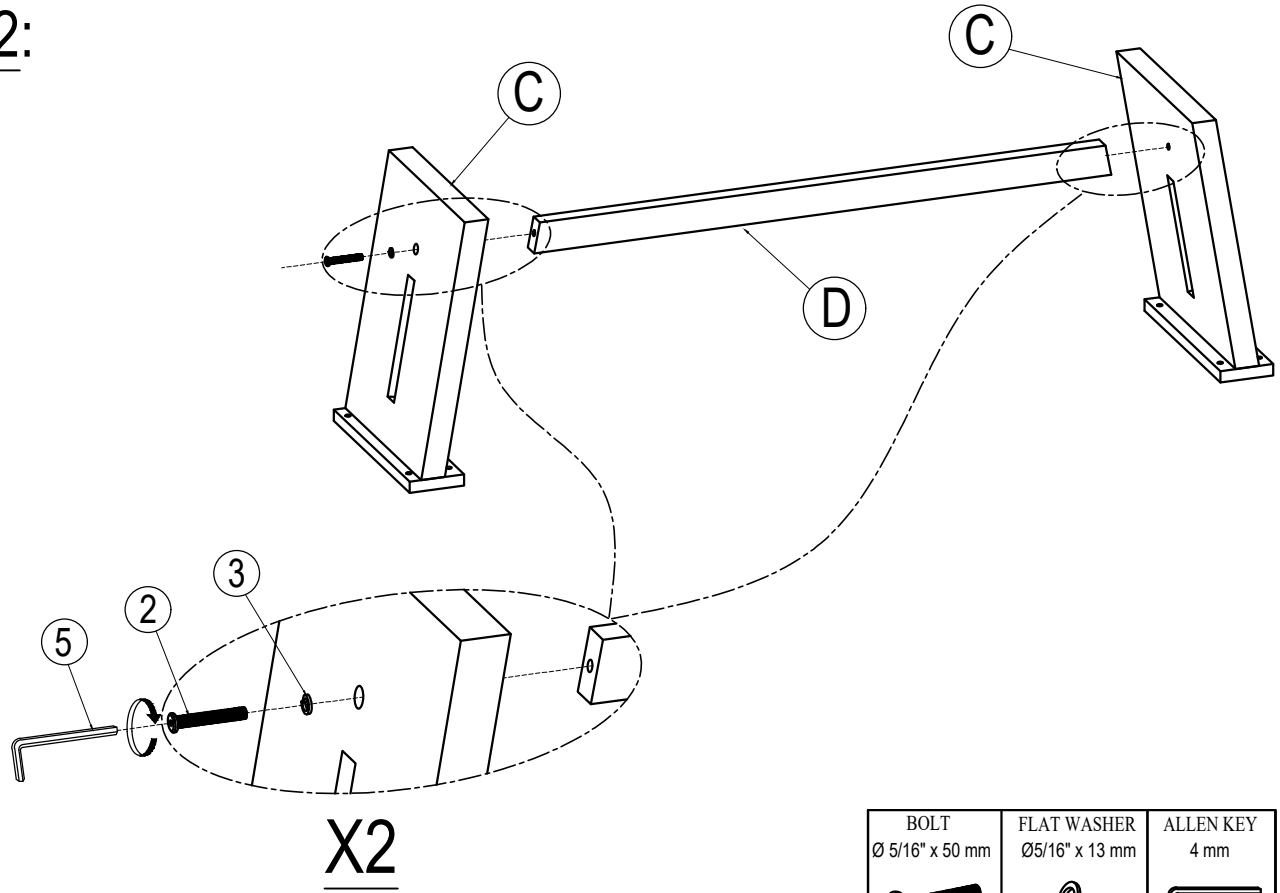

BOLT Ø 5/16" x 50 mm	FLAT WASHER Ø5/16" x 13 mm	ALLEN KEY 4 mm
②x 2	③x 2	⑤x 1

ASSEMBLY INSTRUCTION

STEP 3:

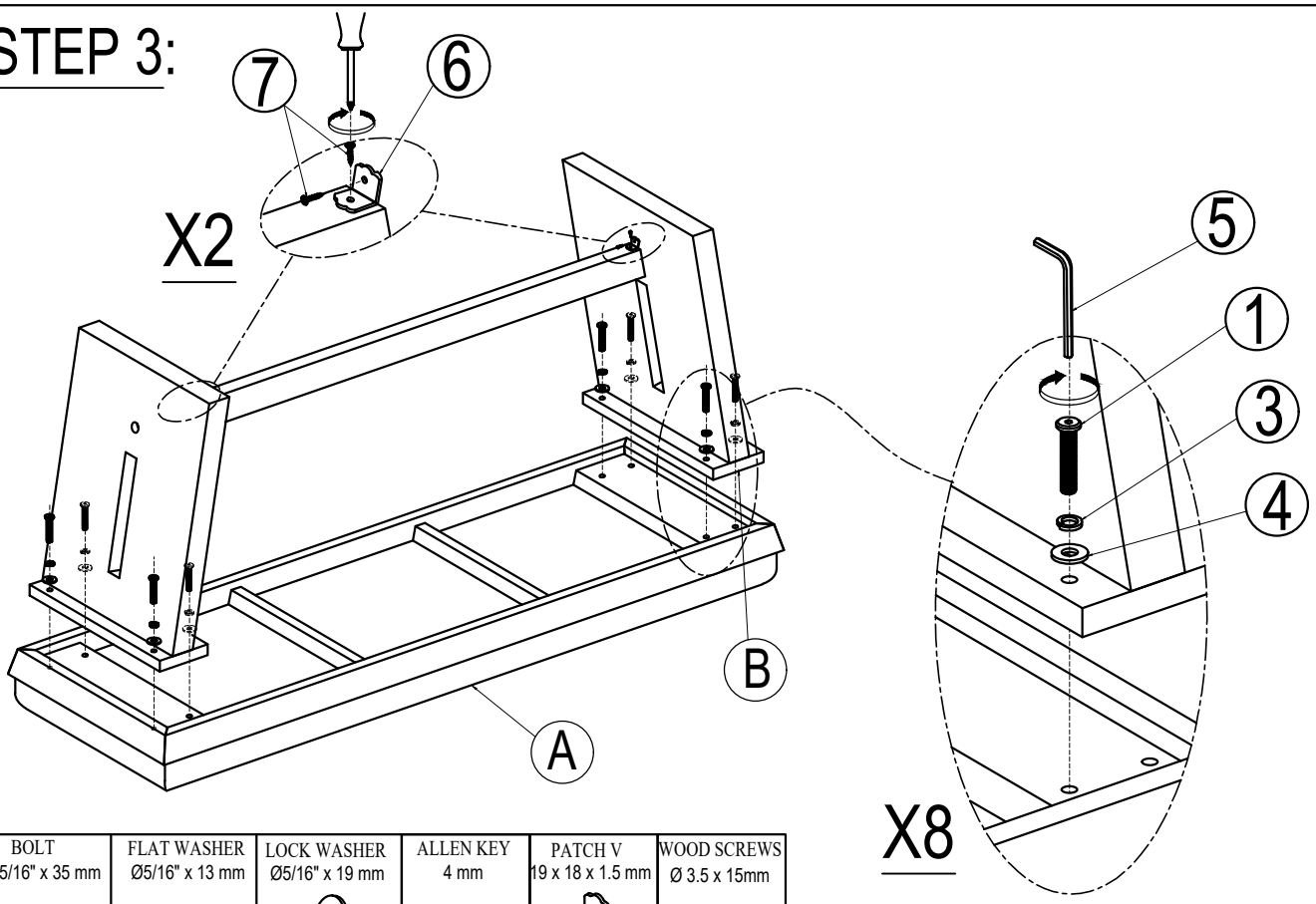

BOLT	FLAT WASHER	LOCK WASHER	ALLEN KEY	PATCH V	WOOD SCREWS
Ø 5/16" x 35 mm	Ø5/16" x 13 mm	Ø5/16" x 19 mm	4 mm	19 x 18 x 1.5 mm	Ø 3.5 x 15mm
①x 8	③x 8	④x 8	⑤x 1	⑥x 2	⑦x 4

COMPLETE

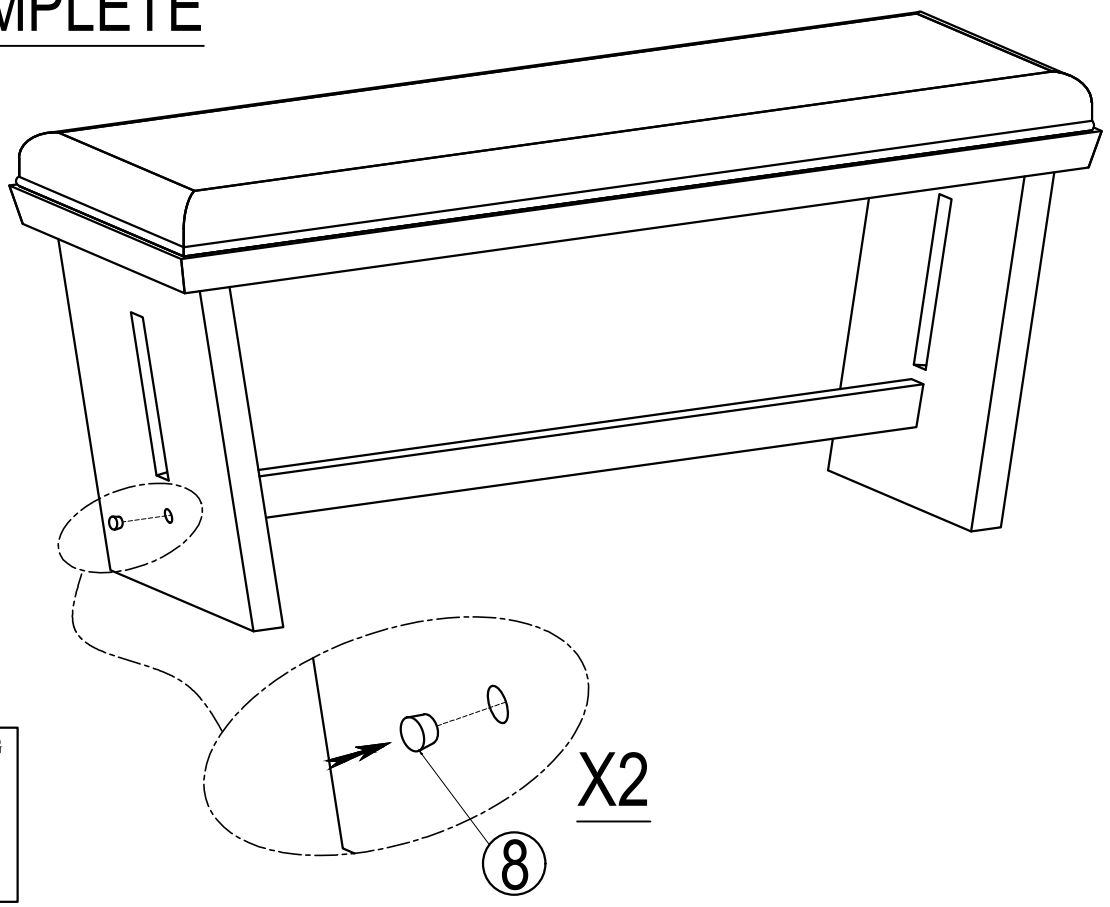

WOOD PLUG
⑧x 2