Assembly Instruction

⚠ **WARNING:**

- Read all instructions carefully and completely before assembly and use.
- Retain for future reference.
- DO NOT use power tools.
- DO NOT over-tighten hardware.
- Periodically check all hardware and re-tighten as necessary.
- DO NOT use product if any component becomes damaged.
- For residential (non-commercial) use only.
- DO NOT sit or stand on product. Use only for intended purpose.
- DO NOT exceed 80lbs for the tabletop and 30lbs for the shelf, evenly distributed.

Parts List
Check all parts before assembly

A. Tabletop  *1	B. Boby  *1	C. Shelf  *1	D. Back panel  *1
E. Leg  *4	H1.Hex bolt  *4(+1 extra)	H2. Washer  *4	H3.Foot pad  *4
H4. Shelf pin  *4	H5. Alley key  *1	H6.Hex bolt  *4(+1 extra)	H7.Hex bolt  *4(+1 extra)

Step 1: Unfold the left panel and right panel and bottom panel from Body (B) as below.

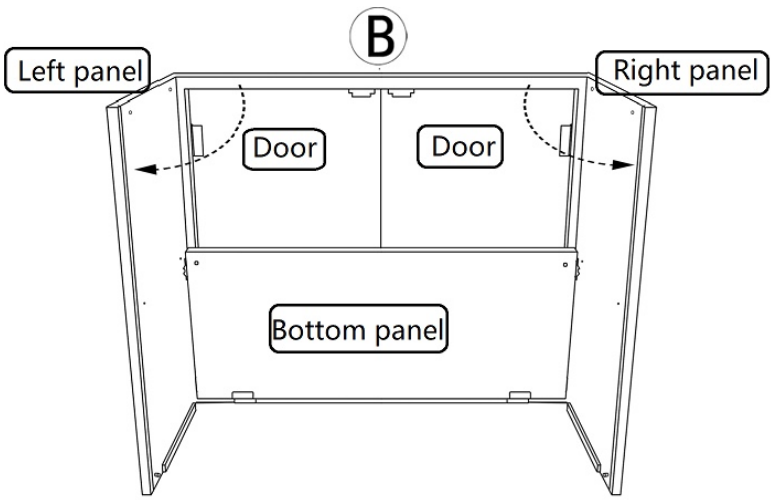

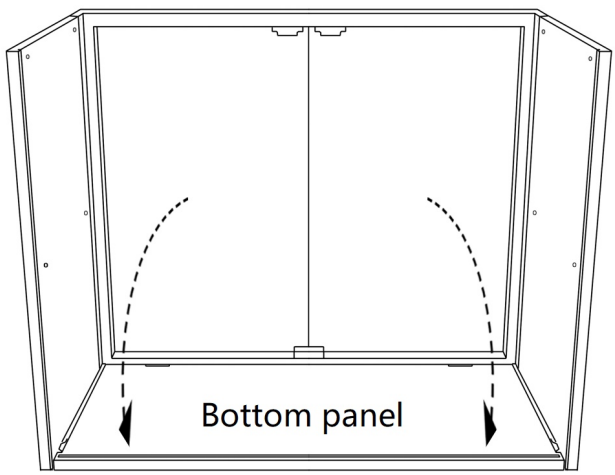

Step 2: Insert Attach Back panel (D) as shown in picture below. Ensure the Back panel (D) with the groove on Left&Right panel (B).

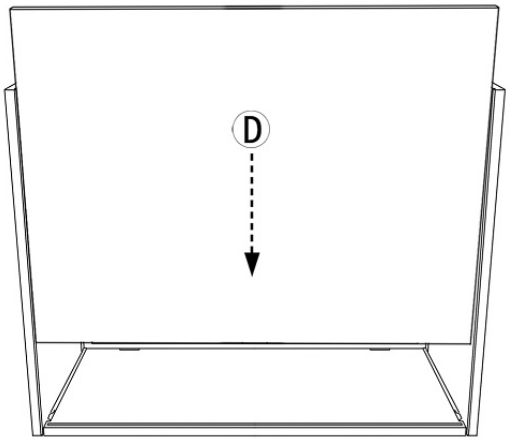

Step 3: Open the doors, attach the Tabletop (A) to the Body (B) with Hex bolts (H1) and Washers (H2) by Allen key (H5) as shown in picture below.

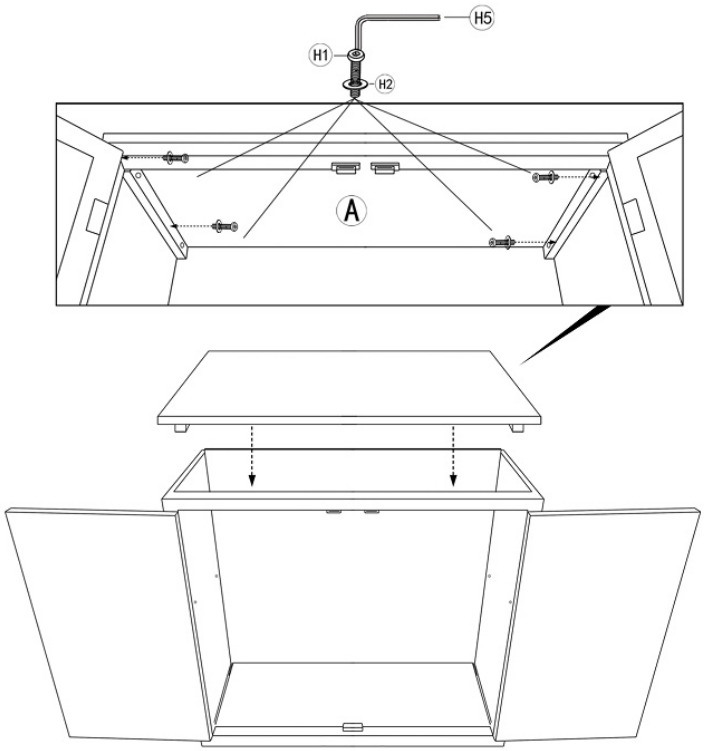

Step 4: Attached the Legs(E) to the bottom of the Body (B) with Hex bolts (H6&H7) by Allen key (H5) , and insert the Foot pads (H3) to the Legs (E)

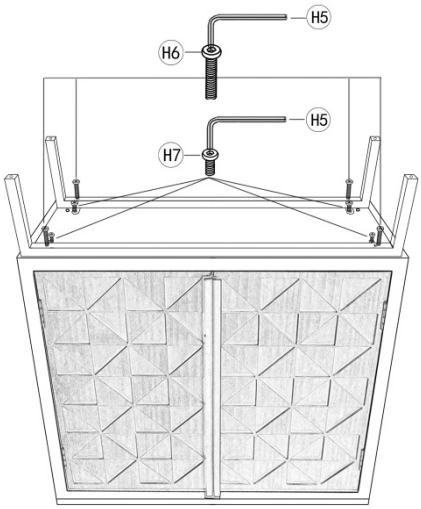

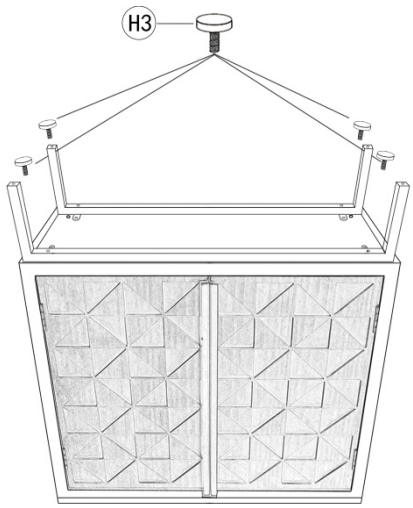

Step 5: Insert the metal pins (H4) on left&Right panel as below left photo shows. Place the Shelf (C) inside as shown in picture below.

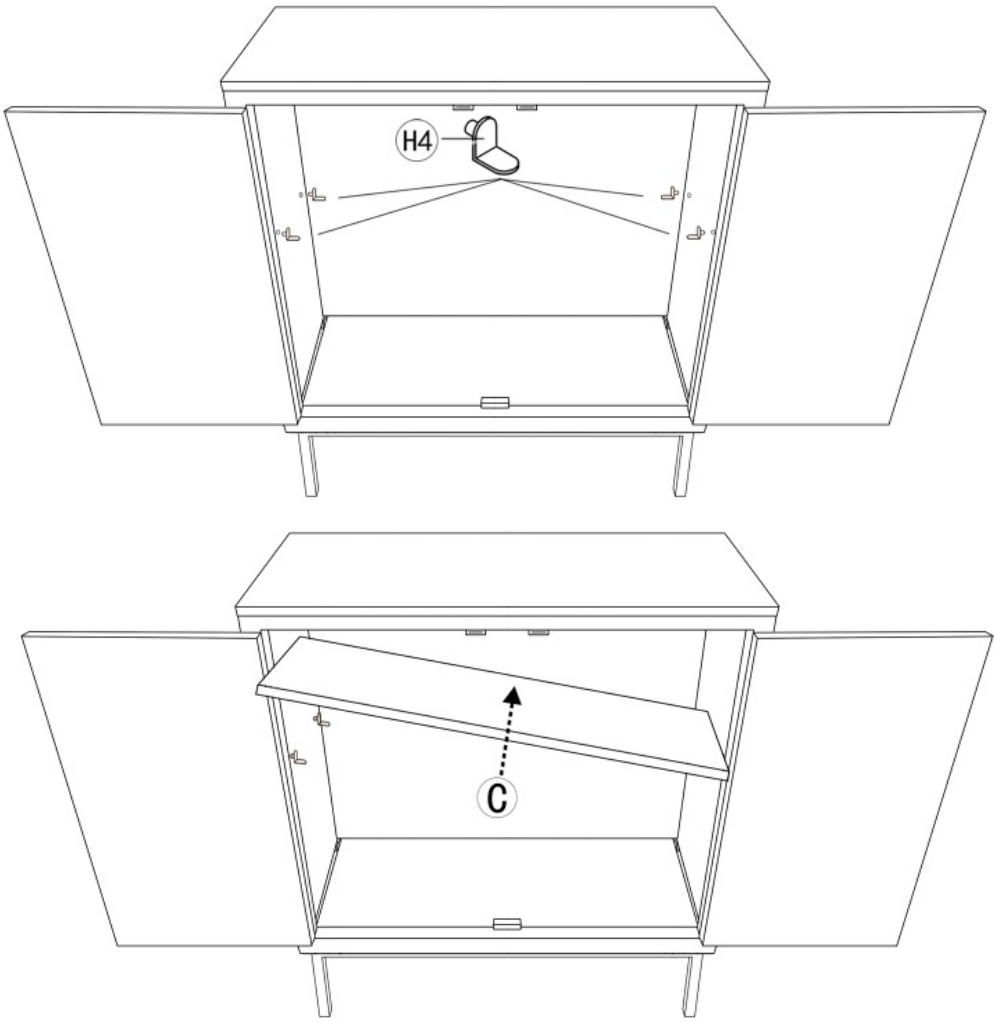

Assembly finished.



Notice:
If you have any questions about your purchase or any other product for sale, please contact Service@jimsidea.com with your order ID, our customer service representatives are available to help.