CHANDELIER LIGHT (CHAIN)
Assembly Instructions

CAUTION

- **Inspect the wire insulation for any cuts, abrasions, or exposed copper that may have resulted during shipping. If there is a defect in the wire, do not attempt installation.**
- **Before starting installation of this fixture or removal of a previous fixture, disconnect the power by turning of the circuit breaker or by removing the fuse at the fuse box.**

TOOLS REQUIRED

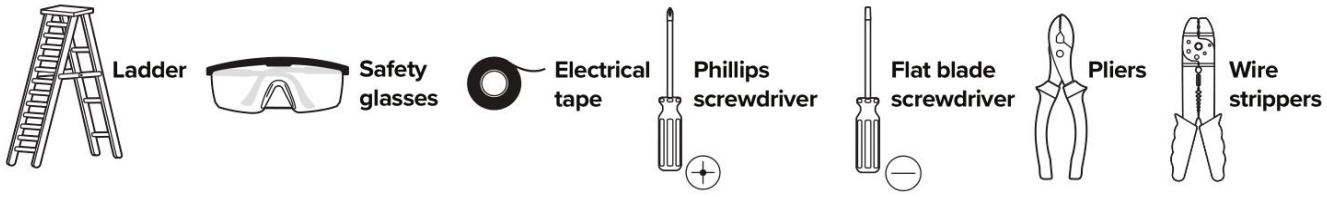

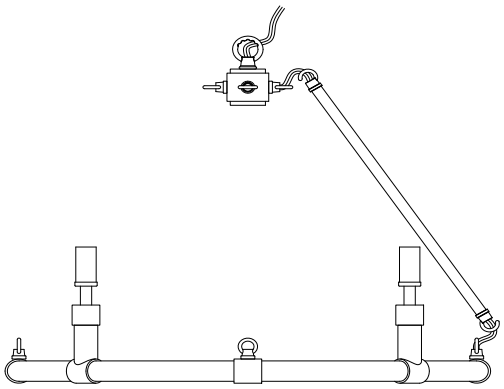

Fixture

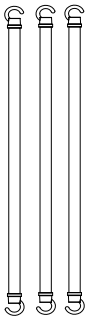

Suspension rods

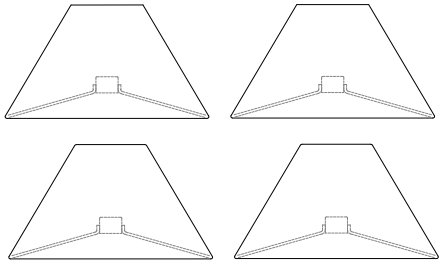

Lamp Shades



Canopy



Mounting Unit

Collor



Chain



Quick Links



Mounting Screws



Wire Nuts

***PARTS SHOWN MAY DIFFER SLIGHTLY PER LIGHT FIXTURE**

CHANDELIER LIGHT (CHAIN)
Assembly Instructions

STEP 1
Attach the end of the chain to the loop on the fixture.

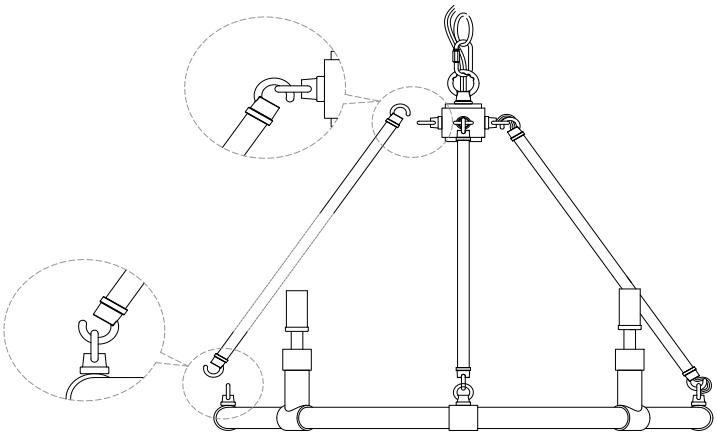

STEP 2
Use the **mounting screws** to attach **the mounting unit to the junction box**

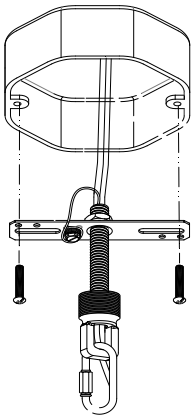

STEP 3
Pass the **chain** and the branchwires through the **screw collar ring** and **canopy**. Feed the branchwires through the pipe nipple on the **mounting unit and attach the end of the chain to the mounting unit.**

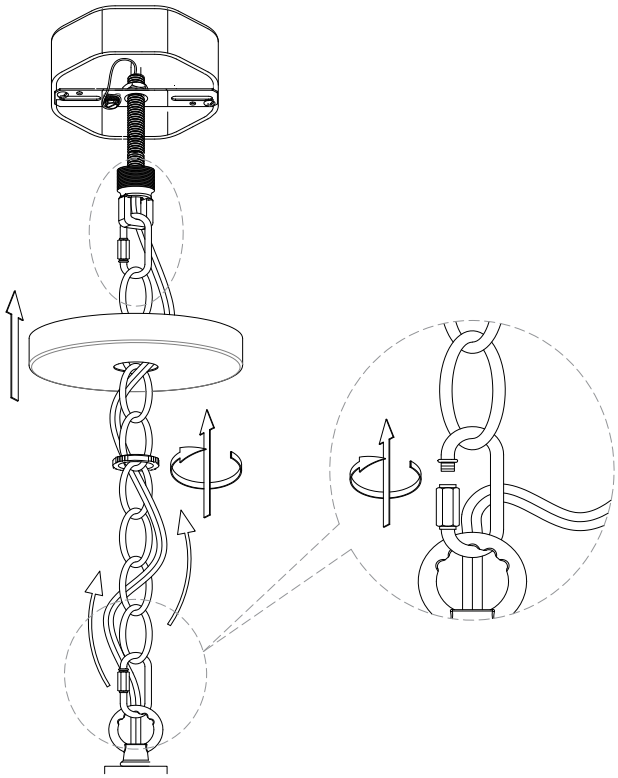

CHANDELIER LIGHT (CHAIN)
Assembly Instructions

STEP 4

Make the electrical connection from the junction box to the fixture. Connect the ground wire to the mounting unit using the preinstalled green ground screw. Then, connect the positive, negative and

Connect Clear, Brown, Gold or Black Parallel Wire without tracer (round & smooth) or Black Fixture Wire to:
Black or Red Supply Wire or Insulated Wire (other than green) with copper conductor.
Connect Clear, Brown, Gold or Black *Parallel Wire with tracer (square & ridged) or White Fixture Wire to:
White Supply Wire or Insulated Wire (other than green) with silver conductor

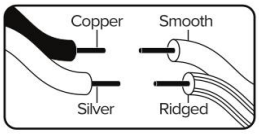

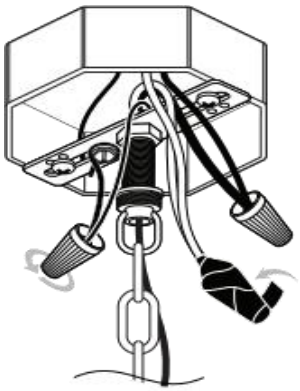

STEP 5

Secure the **canopy** to the **mounting unit** with the **screw collar ring**.

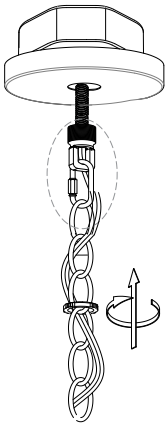

STEP 6

Position cloth cover on the lamp holders, Install bulb (not included).E12 TYPE b 60 Watt or less watt.

