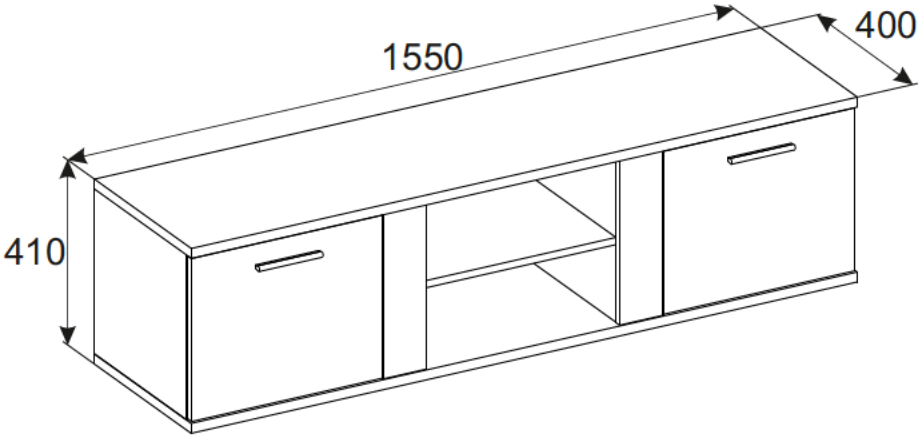

A1 x20	**A2** x20	**C1** 8x35 x26	**D1** x4	**E1** x4
G 1,5x26 x40	**H4** x2	**N2** x6	**P1** x4	**Q2** x2
R23 6,3x13 x8	**R32** 4x27 x4	**R102** 3,5x16 x8	**S5** (white) x8	**S5** x12

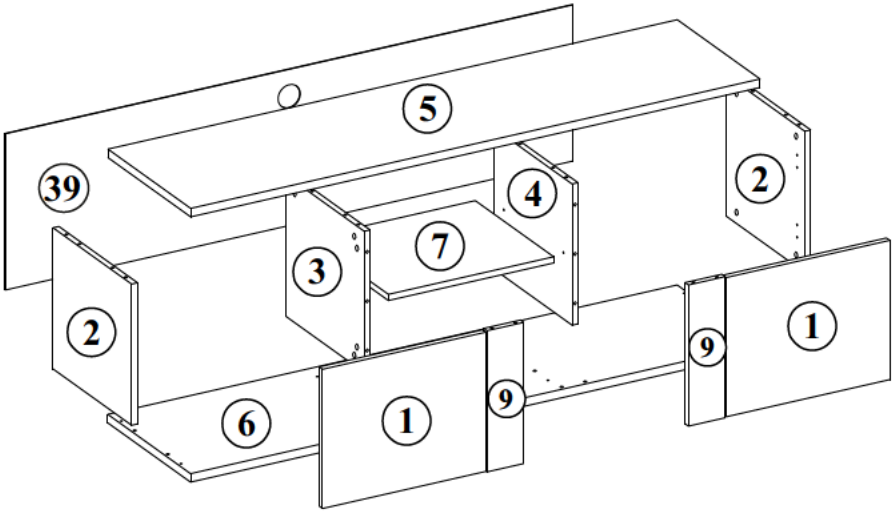

№	a*b*c	x	№→...
1	445x361x16	2	1/2
2	366x380x16	2	1/2
3	366x380x16	1	1/2
4	366x380x16	1	1/2
5	1550x400x22	1	2/2
6	1550x400x22	1	2/2
7	450x379x16	1	1/2
9	366x100x16	2	1/2
39	1545x402x2,5	1	2/2
			