Modern 5-Light Clear Water Pattern Cluster Chandelier

Caution: Please turn off power before installation and read the manual carefully, we advise you contact professional electricians to install for safety purpose.

Product Features

Style: Modern

Material: Metal, Glass

Base Type: E12

Light Source Included: No

Voltage: 120VAC

Wattage: 40W

Package includes

1 x Chandelier

1 x Accessories Kit

1 x User's Manual

Installation Instructions

1. Attach the hanging rod(s) to the fixture body (Different lengths of rods or all rods can be installed as needed).
2. Secure the lamp body onto the hanging rod(s).
3. Connect the hanging loop with the quick link and tighten it.
4. Fix the mounting plate to the junction box with screws.
5. Connect the fixture's live (L), neutral (N), and ground (E) wires to the corresponding wires in the junction box.

6-7. Cover the mounting plate by the ceiling plate, then tighten the cap nuts to secure it.

8. Install the light bulb (Bulb not included).
9. Screw the large-threaded glass globe onto the lamp socket.
10. Thread the auxiliary steel wire through the center hole of the leather cord.
11. Pass the auxiliary wire from the top to the bottom of the small-threaded glass globe.
12. Screw the small-threaded glass globe onto the thread fitting.
13. Remove the auxiliary wire from the leather cord.
14. Tie a knot at the exposed end of the leather cord beneath the glass globe.
15. If installing one 500mm hanging rod: Loosen the screw, raise the thread fitting by 250mm, then re-tighten the screw to lock in place (Refer to Figure 4).
16. If installing one 500mm hanging rod: Trim all leather cords by 250mm (Refer to Figure 4).

Note: please use this product accordingly to its intended purpose, do not retrofit or remodeling the product. The warranty does not cover if the failure is caused by the third party product, or natural disasters.

Made in China

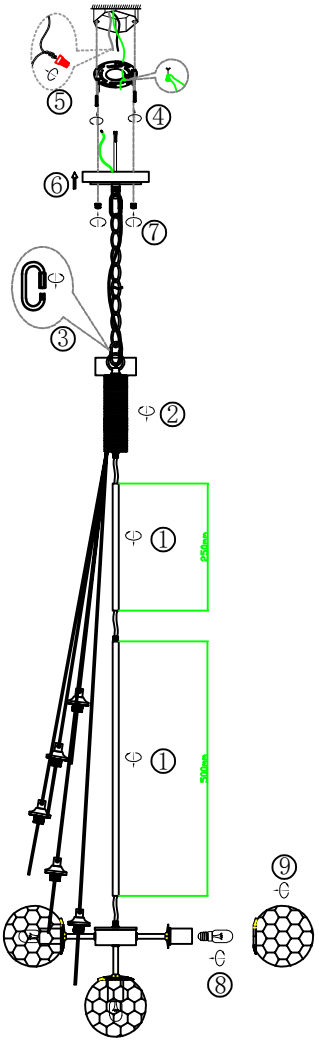
⑤
④
⑥
⑦
③
②
①
①
⑨
⑧

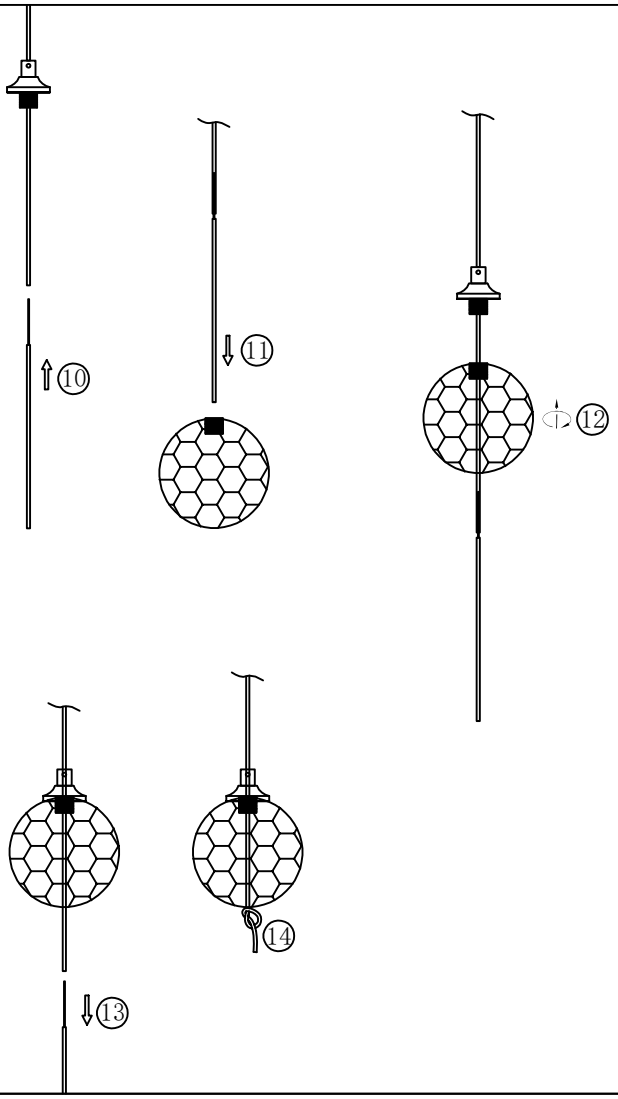
⑩
⑪
⑫
⑬
⑭

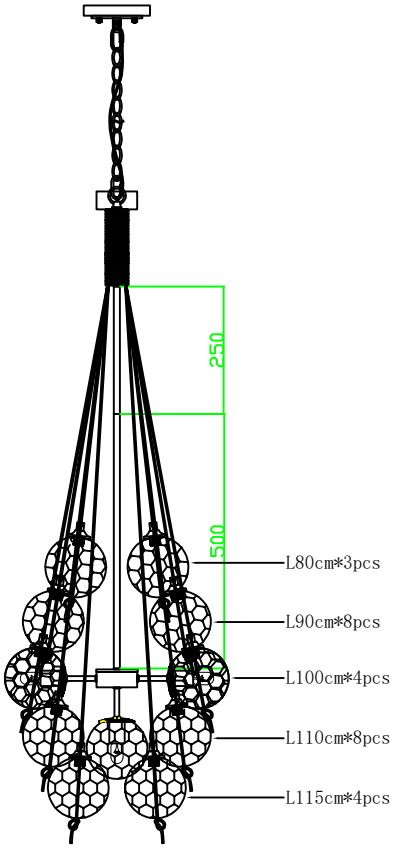
250
500
L80cm*3pcs
L90cm*8pcs
L100cm*4pcs
L110cm*8pcs
L115cm*4pcs

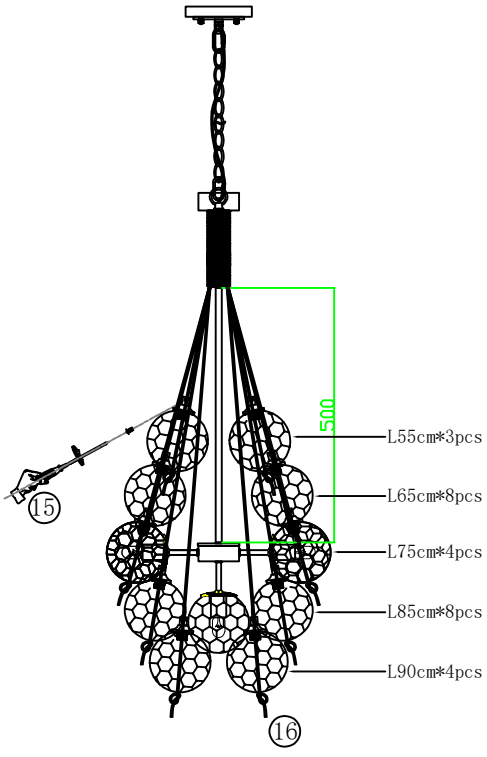
500
⑮
L55cm*3pcs
L65cm*8pcs
L75cm*4pcs
L85cm*8pcs
L90cm*4pcs
⑯