INSTALLATION
Product Manual

Version : KF670027

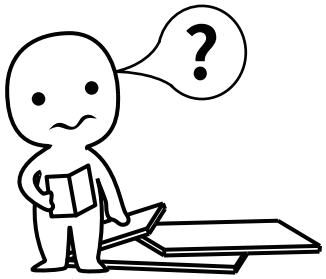

IMPORTANT INFORMATION!

please read the entire manual before starting to assemble and/or using this product.follow the manual thoroughly and keep it for further reference.

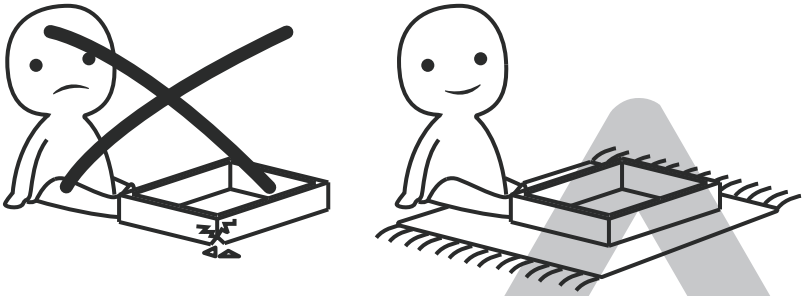

AVOID SCRATCHES!

In order to avoid scratching this furnuture should be assembled on a soft layer-could be a rug.

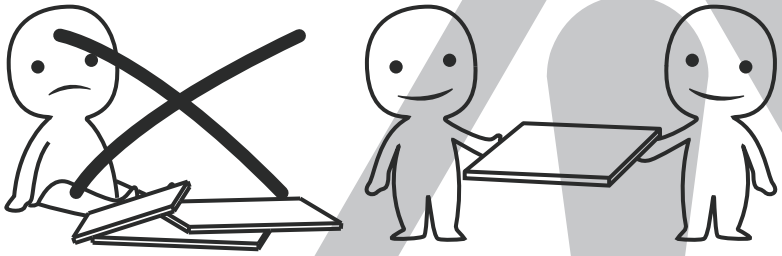

IMPROVE EFFICIENCY !

Try to find a partner to install with you, which can speed up the installation efficiency and shorten the time.

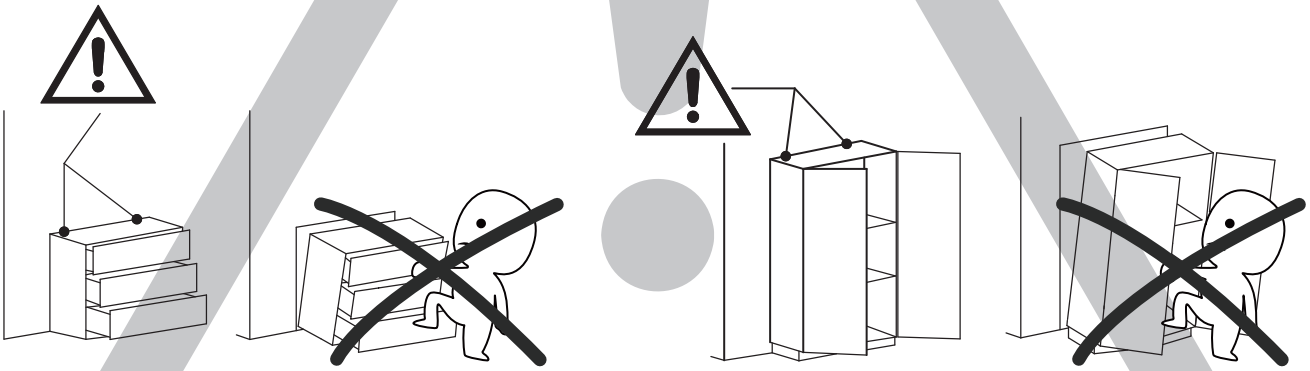

ANTI-TOPPLE WARNING !

Overturned furniture can cause serious or fatal crush injuries. To prevent tipping over, be sure to use the wall attachment, if not included with this product. Please purchase the wall attachment that fit your wall. If unsure, seek professional advice. Please read and follow each step of the instructions carefully.

IMPORTANT !

It is important that any product which is assembled using any kind of screw is re-tightened 2 weeks after assembly,and once every 3 months - in order to assure stability through-out the lifespan of the product.

For regular maintenance and cleaning of the product, for the frame, please use a rag dipped in neutral detergent to fully wipe it, and then dry it with a clean rag.For glass materials, wipe with a rag dampened with water glass cleaner, and then dry with a dry rag.

Do not use an electric screwdriver, and do not use too much force when installing, because the board is easy to break.

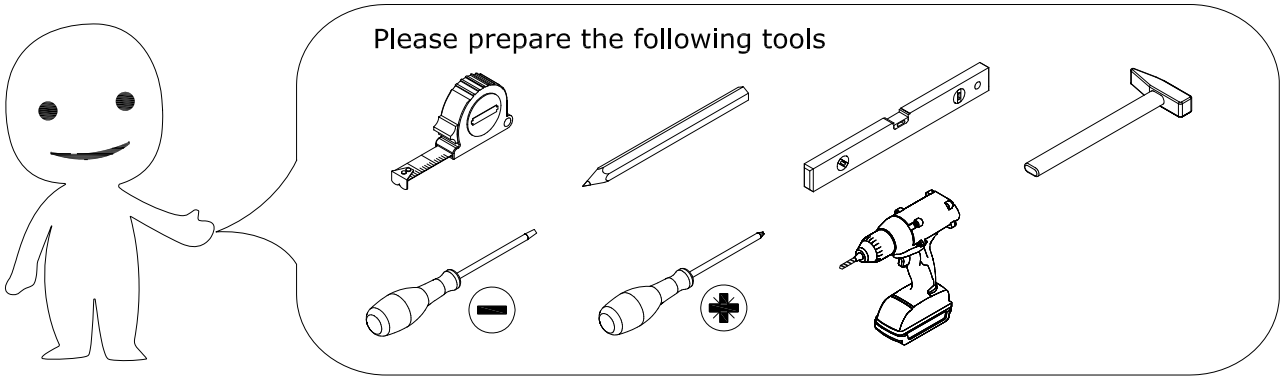

When installing, please carefully confirm whether each screw corresponds to the manual, accessories with similar shapes can be distinguished by size

A x 104	B x 8	C x 96	D x 10
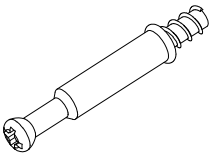	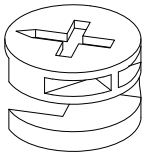	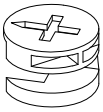	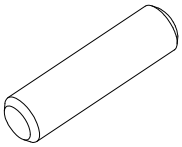
∅6 x 35mm	∅15 x 12mm	∅12 x 10mm	∅8 x 30mm

E x 4	F x 8	G x 20	H x 42
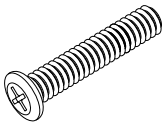			
∅8 x 40mm	∅6 x 25mm	∅6 x 20mm	∅4 x 14mm

I x 50	J x 1	K x 8	L x 4
	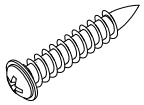	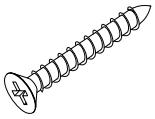	
∅3 x 12mm	∅6 x 35mm	∅4 x 35mm	

M x 4	N x 2	O x 2	P x 4
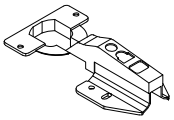	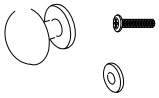	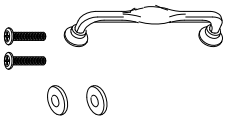	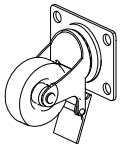

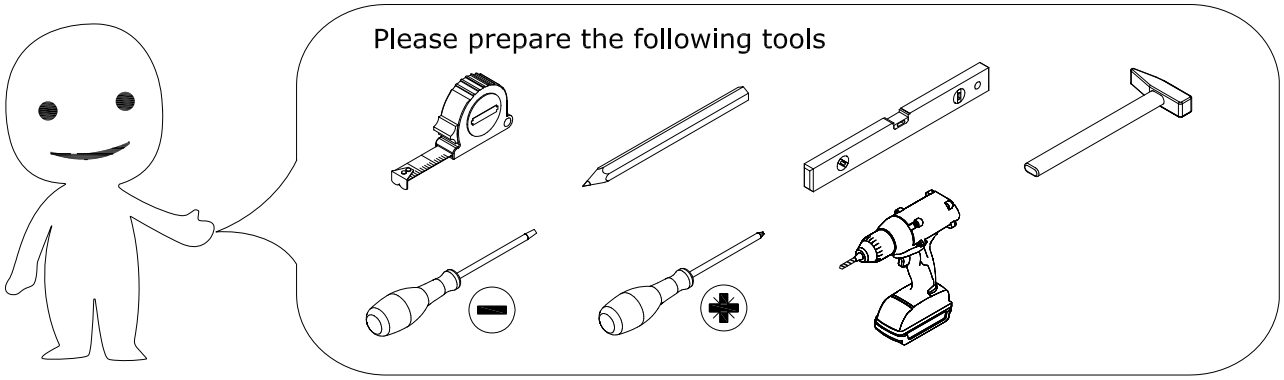

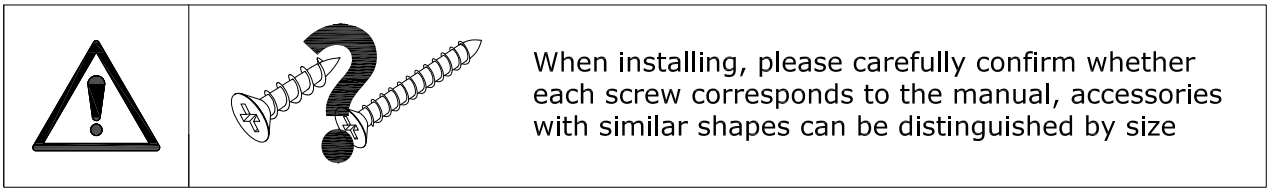

Q x 1	R x 4	S x 3	T x 2
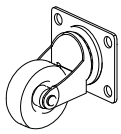	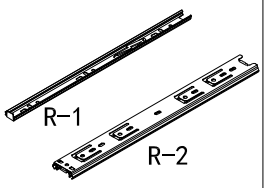	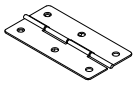 2.5 in	

U x 4	V x 8	W x 20	X x 3
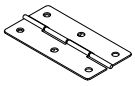 1.5 in	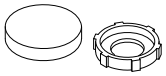	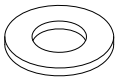	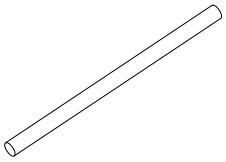

Y x 1
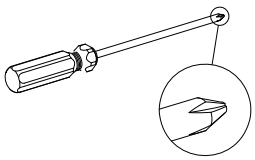

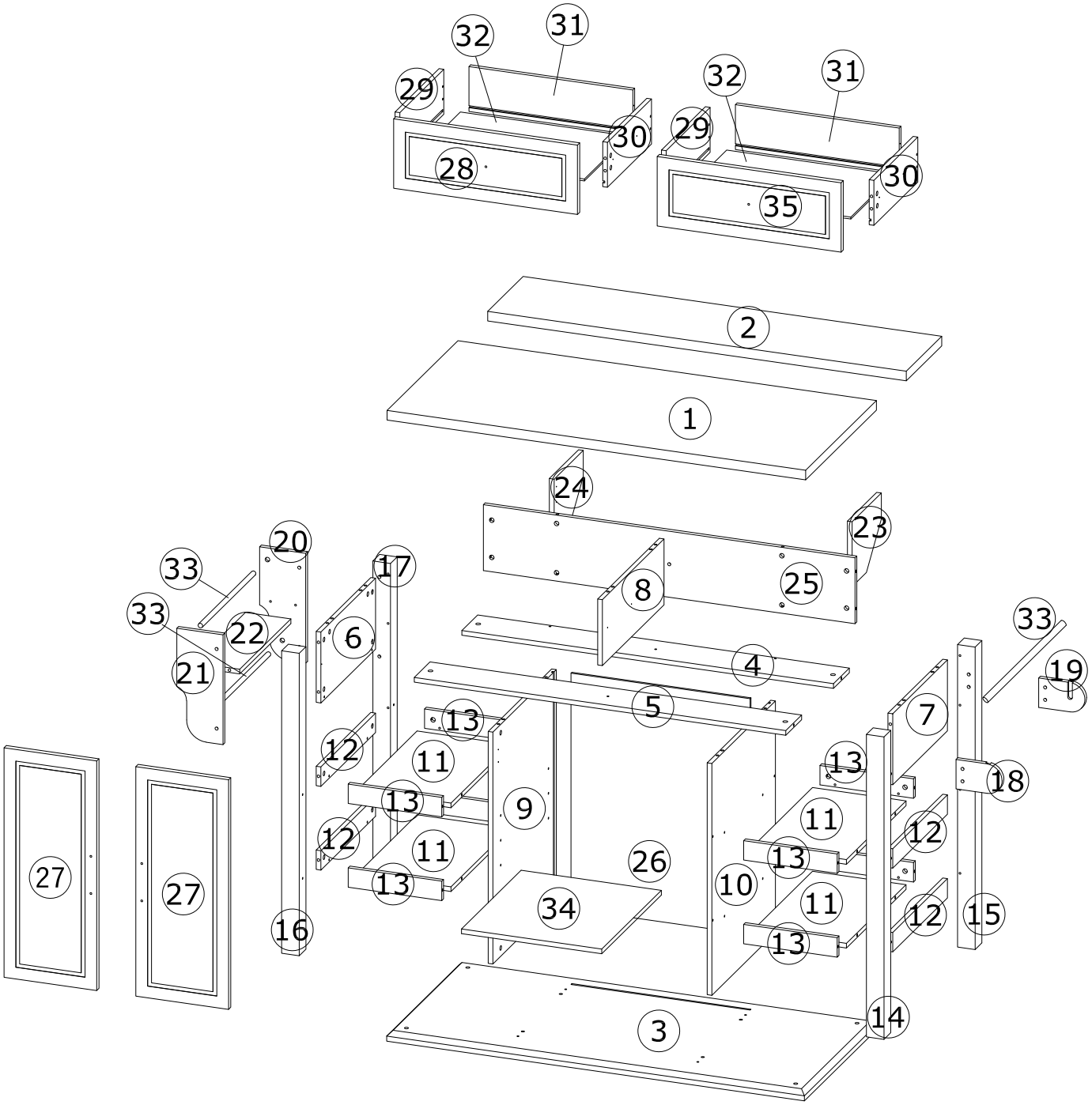

⚠WARNING

Children have died from furniture tipover.To reduce the risk of furniture tipover:

- ALWAYS install Anti-tip device provided.
- NEVER put a TV on this product.
- NEVER allow children to stand,climb or hang on drawers,doors,or shelves.
- NEVER open more than one drawer at a time.
- Place heaviest items in the lowest drawers.

This is a permanent label.
Do not remove!

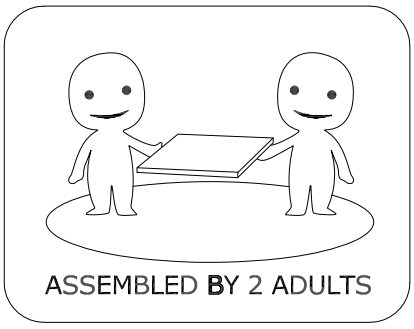

1

A x 16

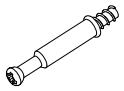

∅6 x 35 mm

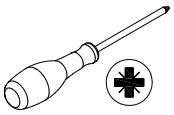

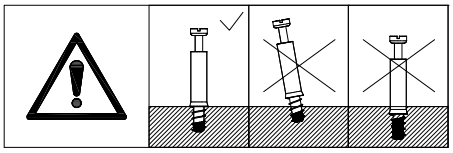

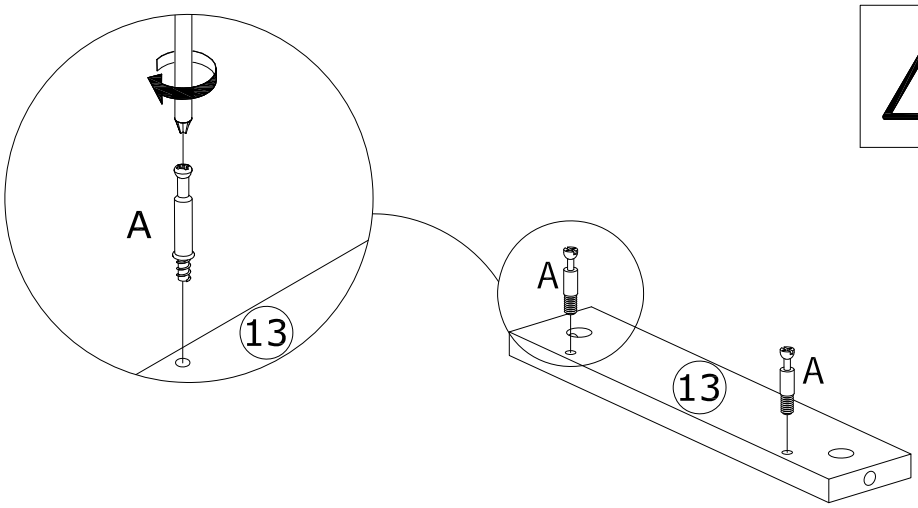

x8

Secure the two screws A to board No. 13, and repeat this eight times

2

C x 16

∅12 mm

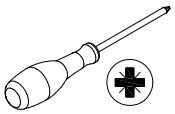

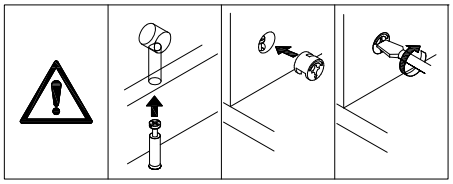

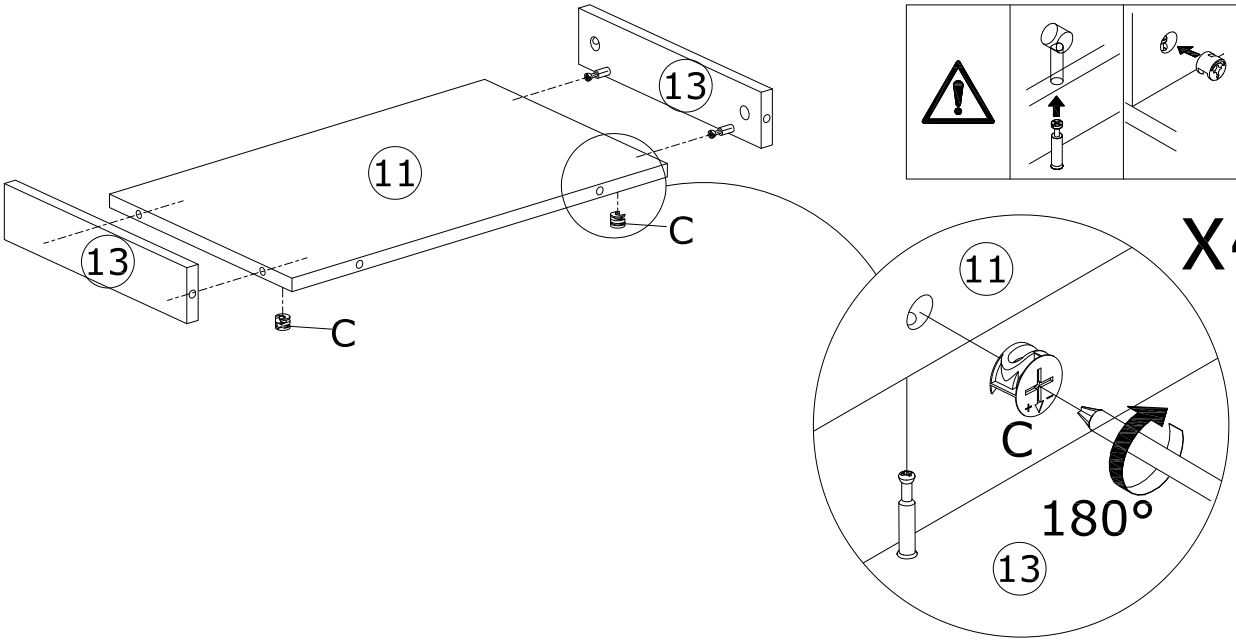

x4

Secure two No. 13 boards to one No. 11 board. Repeat this four times.

3

A x 16

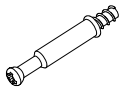

∅6 x 35 mm

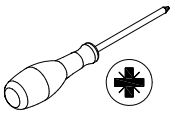

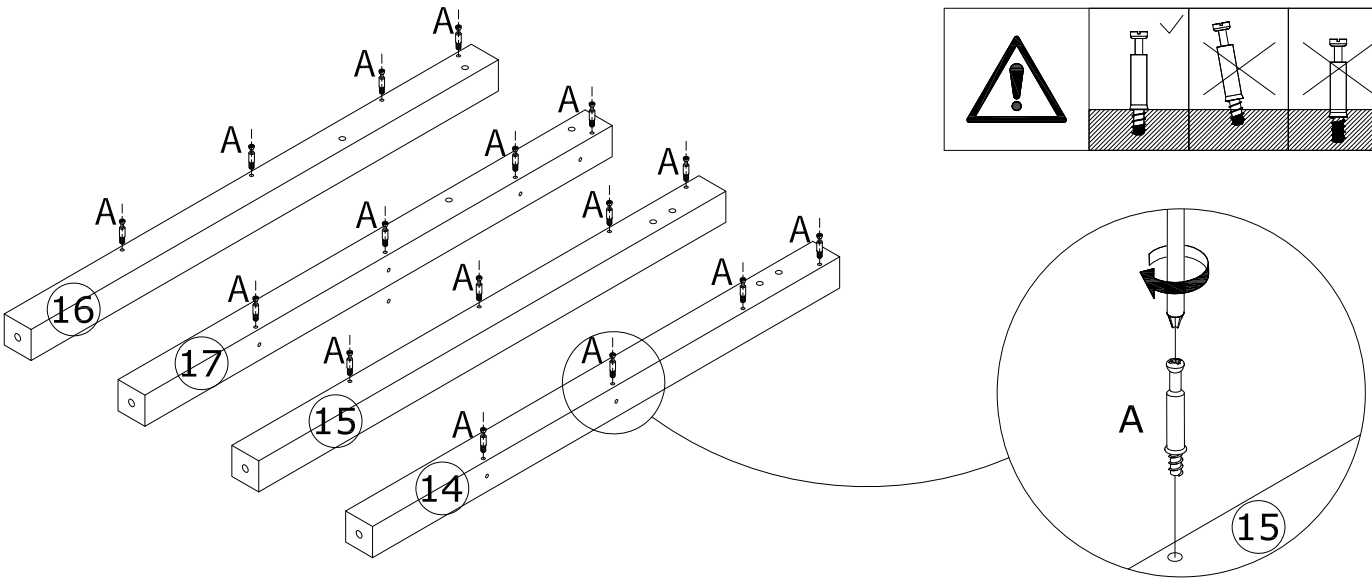

Fasten four screws A to each of the posts numbered 14, 15, 16 and 17.

4

C x 8

∅12 mm

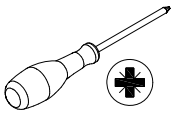

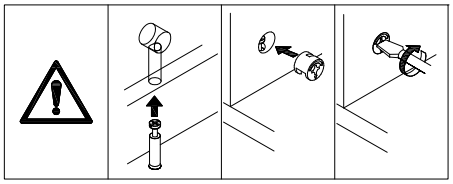

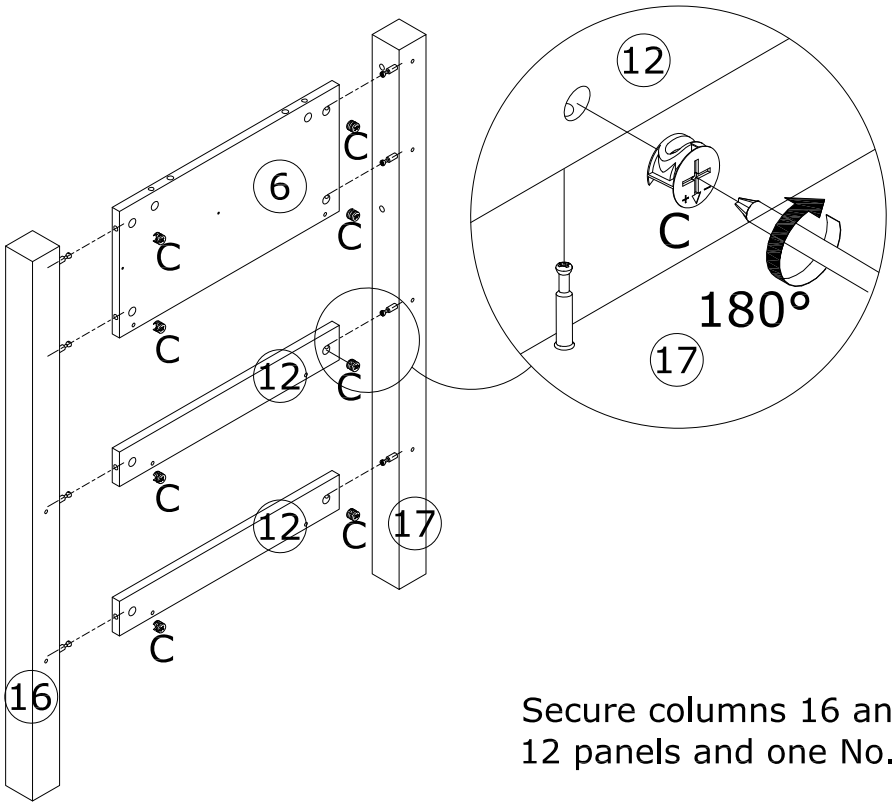

Secure columns 16 and 17 to the two No. 12 panels and one No. 6 panel

5

C x 8

∅12 mm

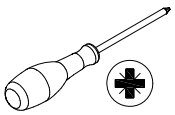

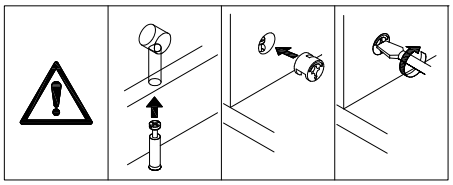

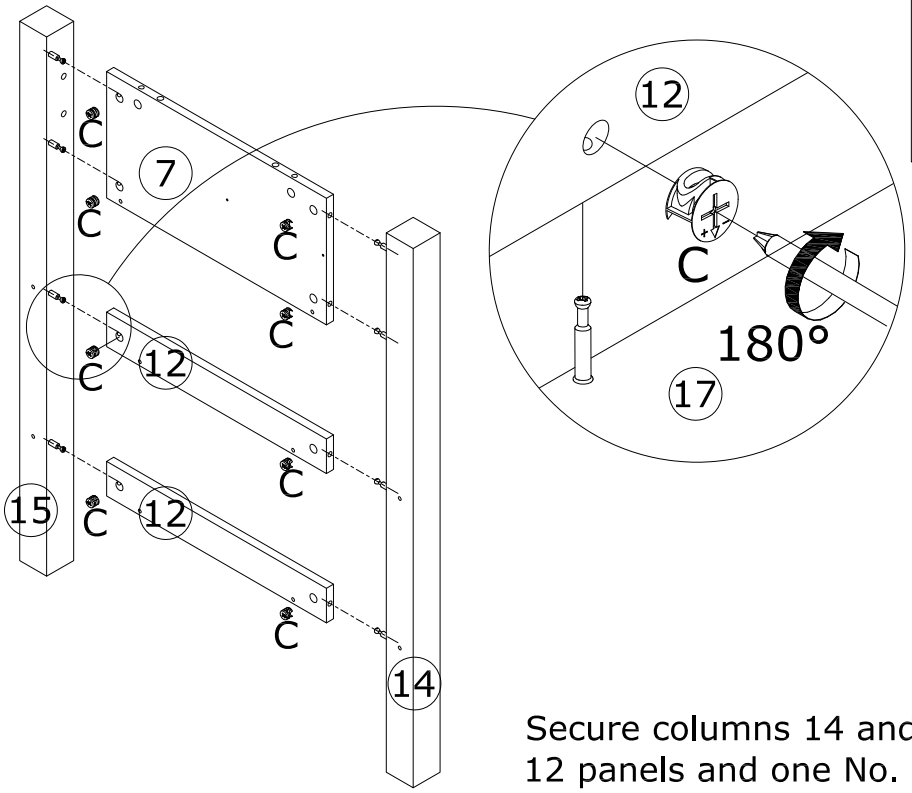

Secure columns 14 and 15 to the two No. 12 panels and one No. 6 panel

6

A x 8

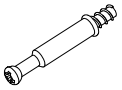

∅6 x 35 mm

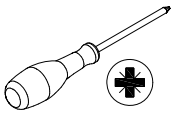

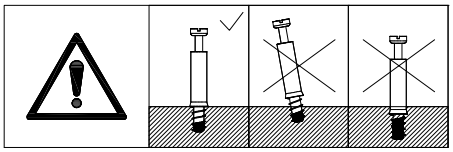

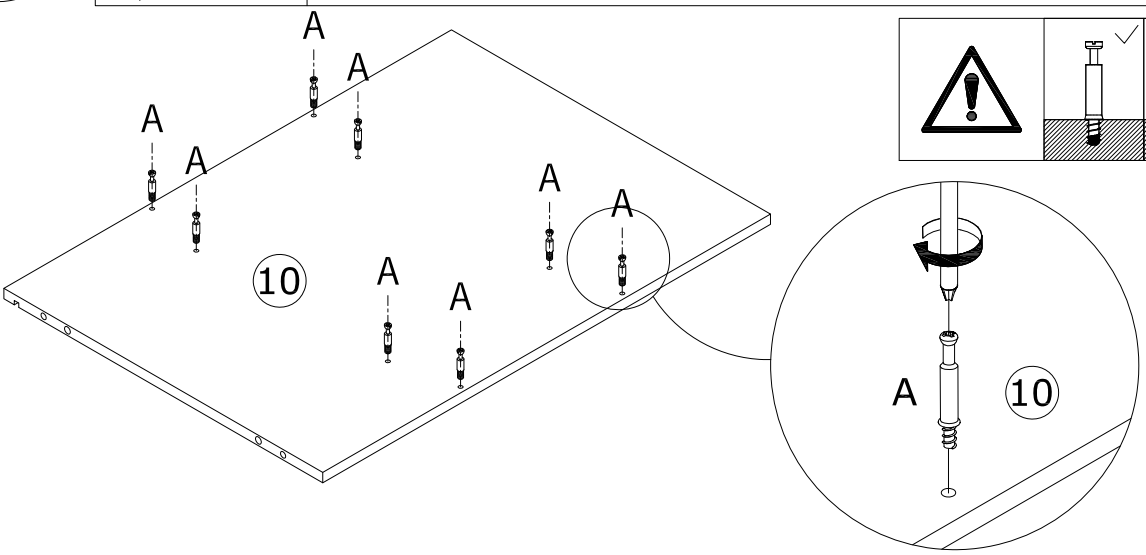

Secure the 8 screws A to board No. 10

7

A x 8

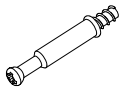

∅6 x 35 mm

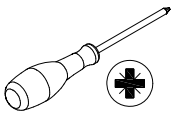

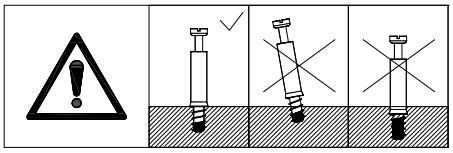

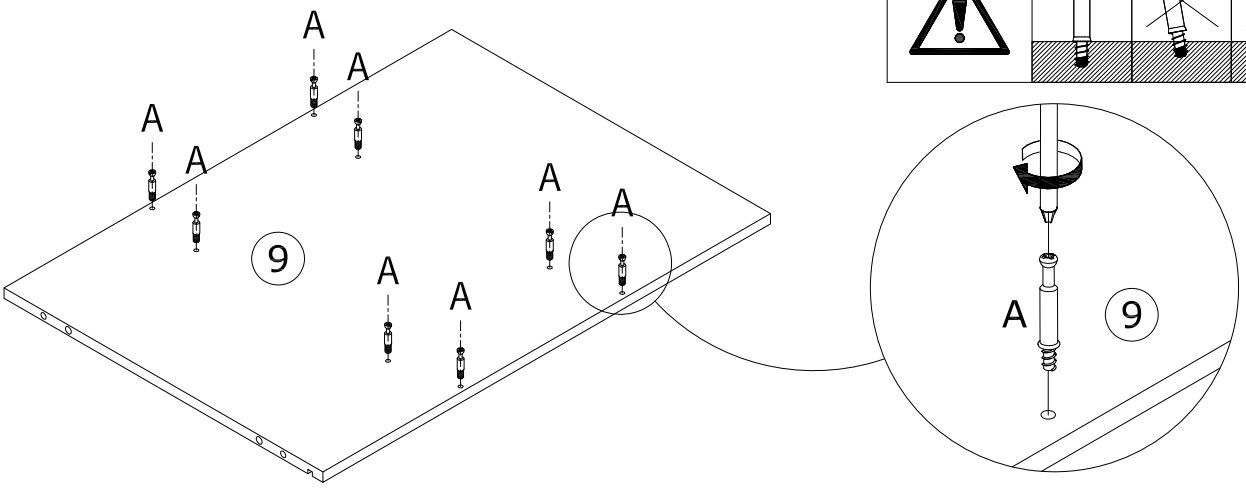

Secure the 8 screws A to board No. 9

8

C x 8

∅12 mm

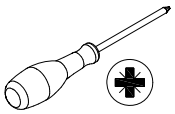

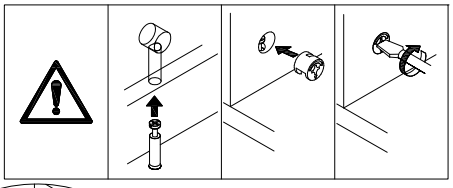

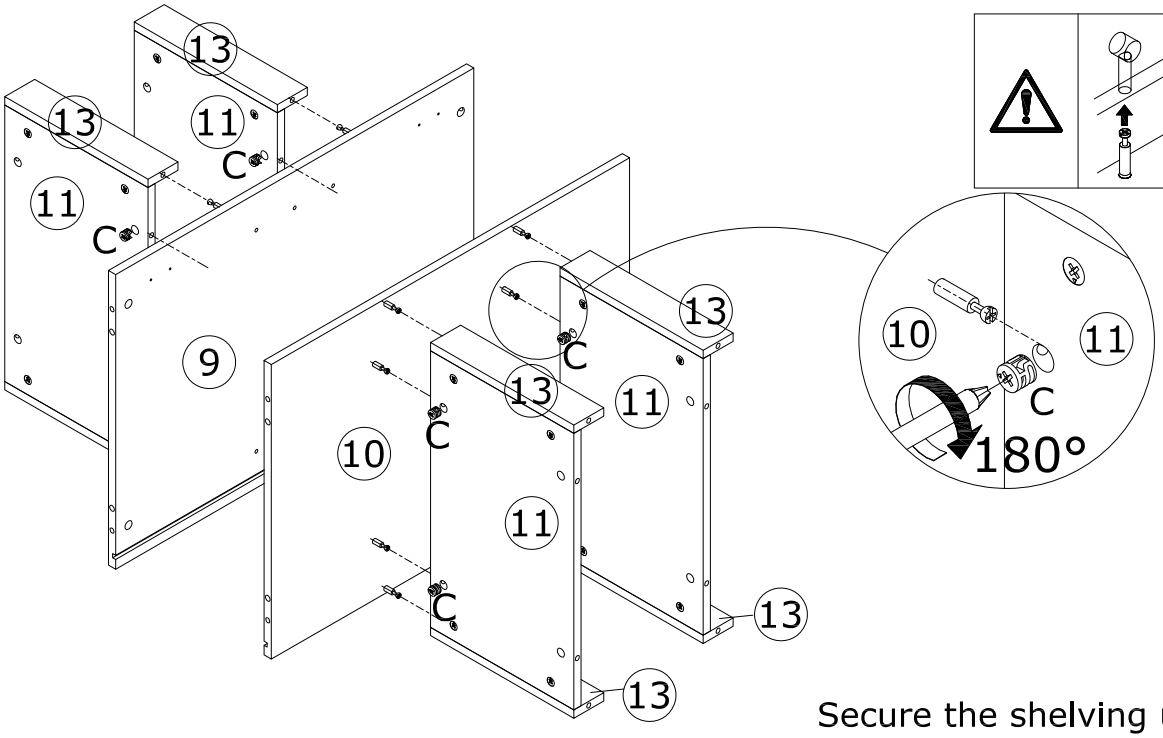

Secure the shelving unit completed in Step 2 to boards 9 and 10

9

A x 2

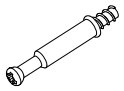

∅6 x 35 mm

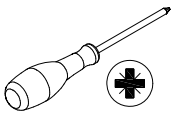

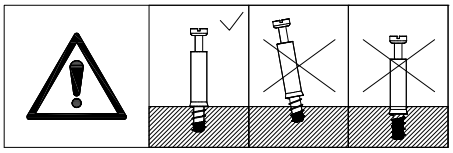

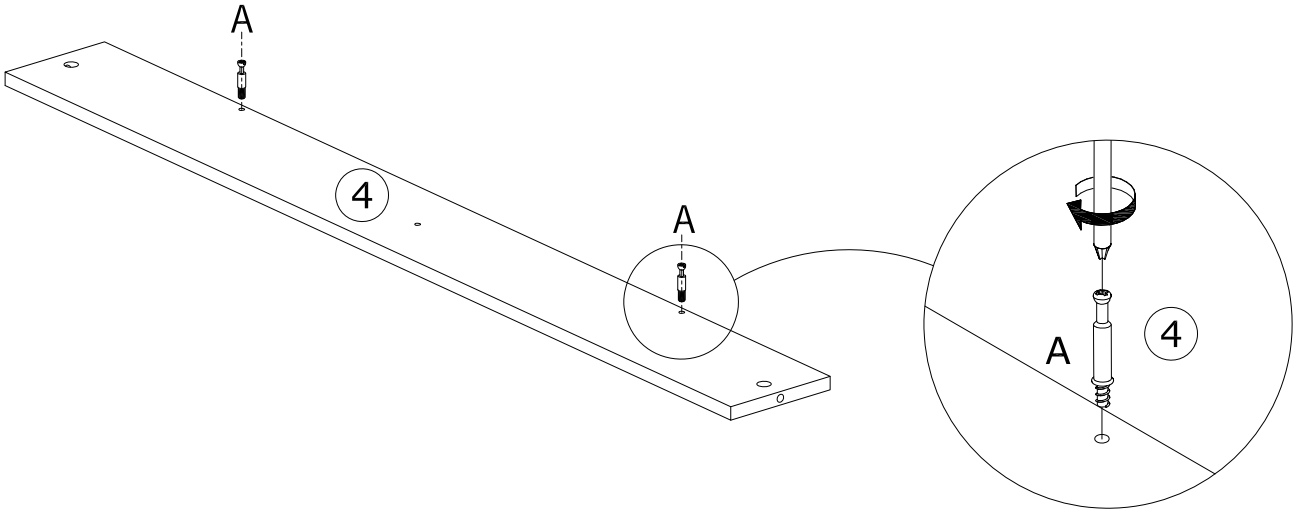

Secure the two screws A to board No. 4

10

C x 2

∅12 mm

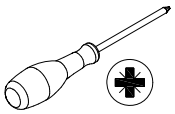

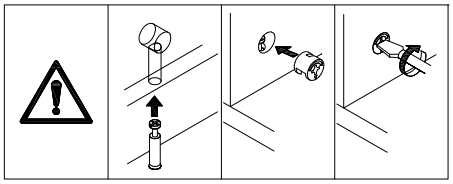

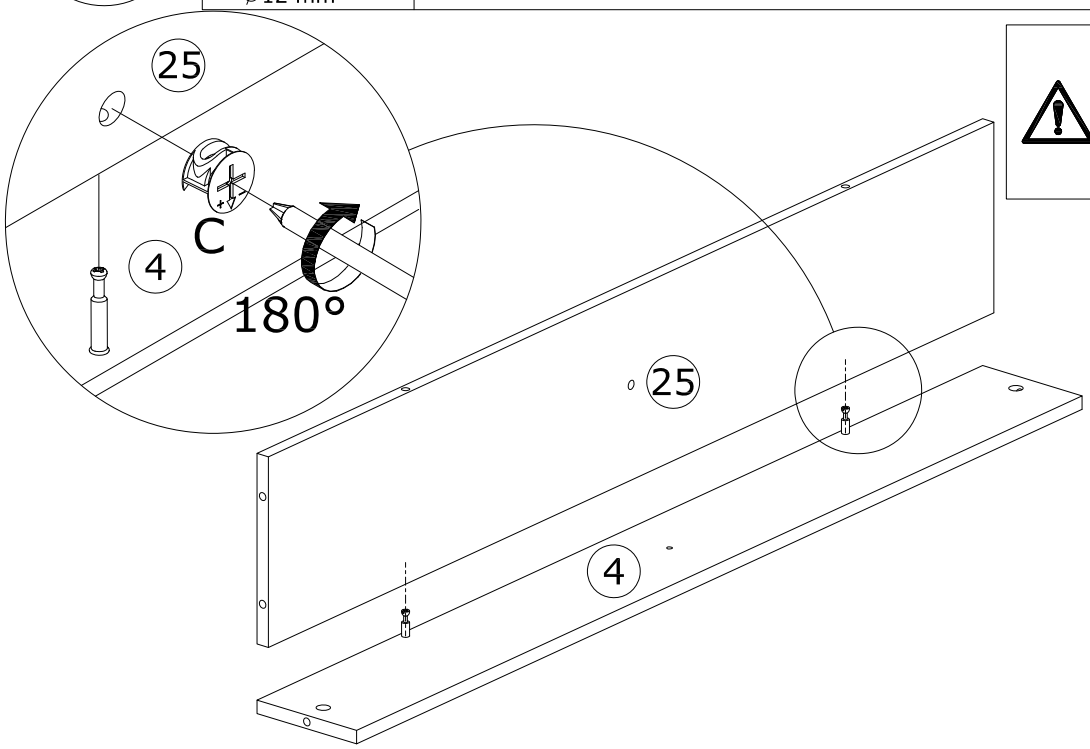

Secure board No. 4 to board No. 25

11

A x 2

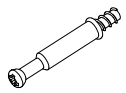

∅6 x 35 mm

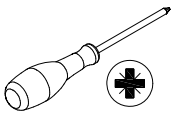

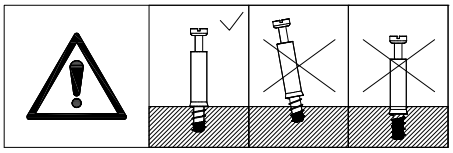

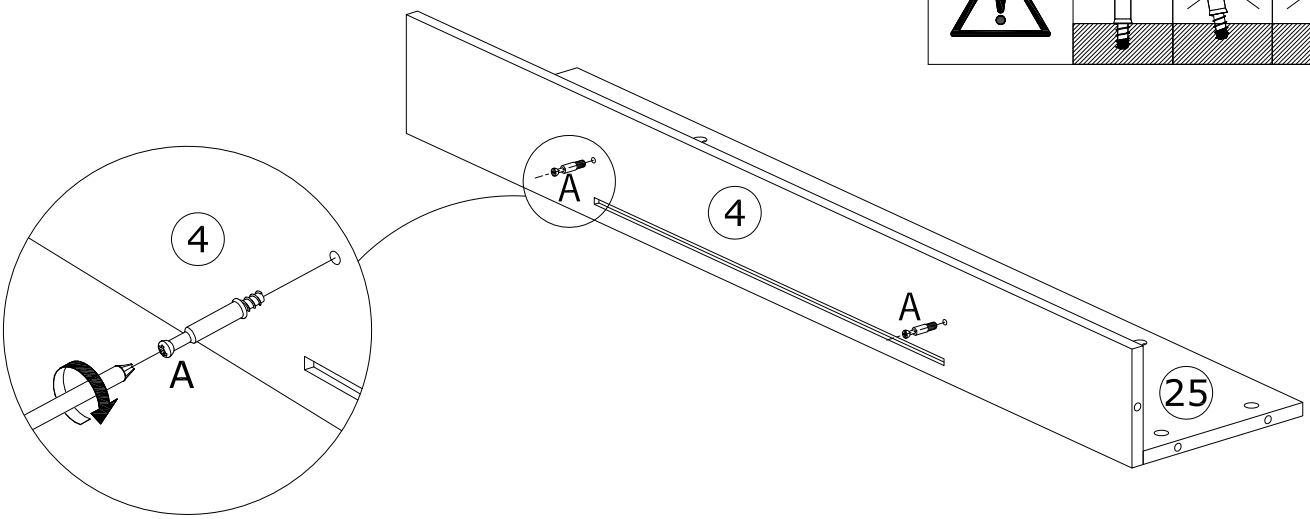

Fit two screws A to the bottom of panel No. 4

12

A x 2

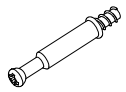

∅6 x 35 mm

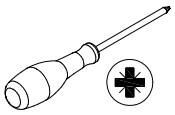

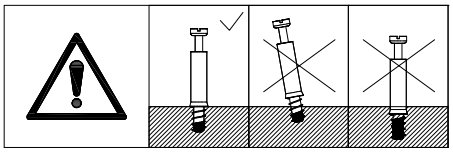

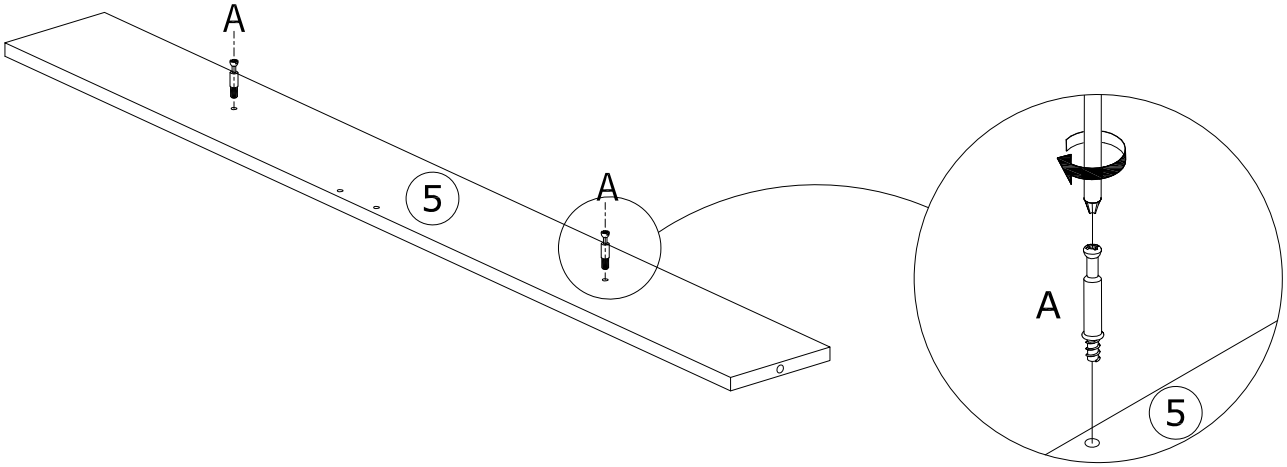

Secure two screws A to plate No. 5

13

B x 4

∅15 mm

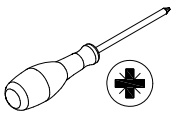

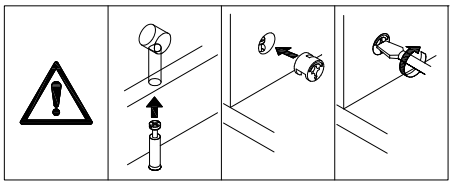

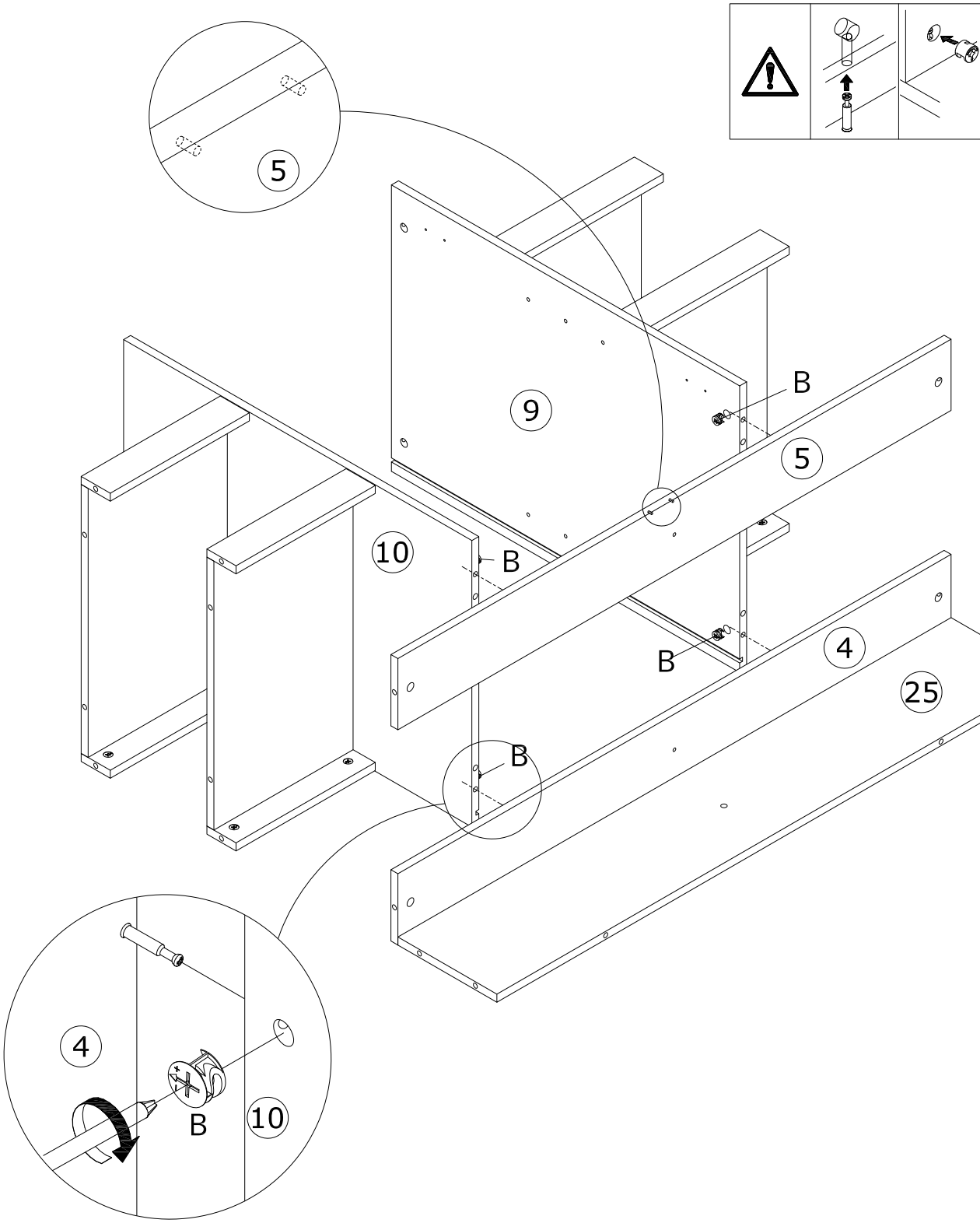

Secure panels 9 and 10 to panels 4 and 5

14

A x 12

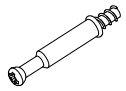

∅6 x 35 mm

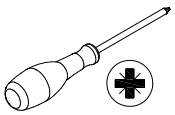

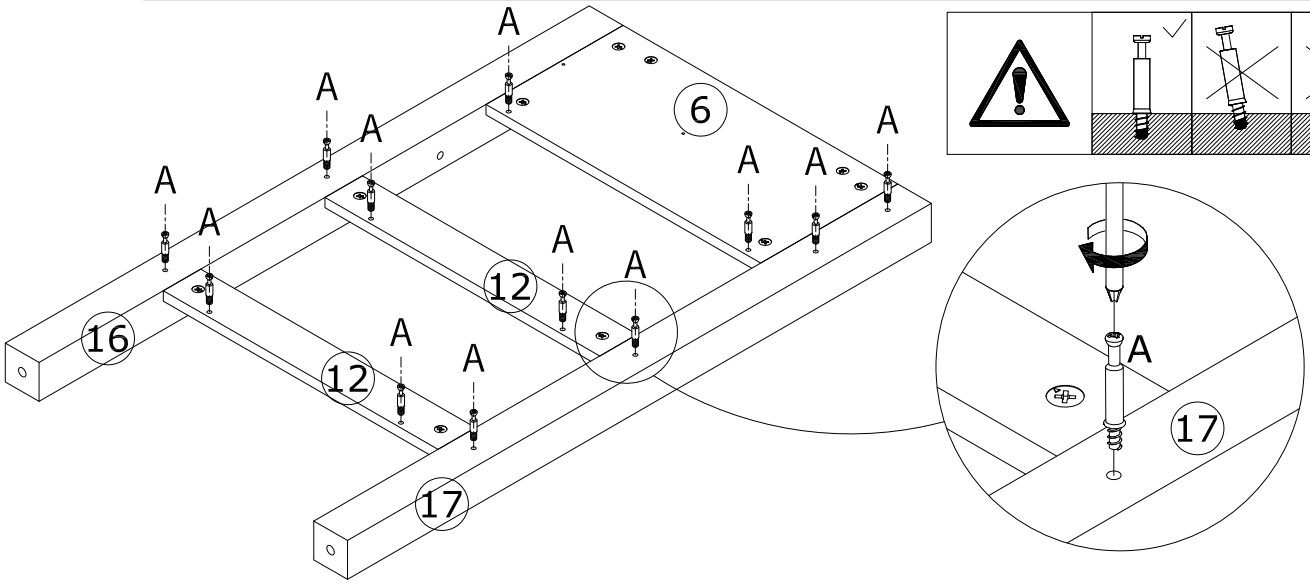

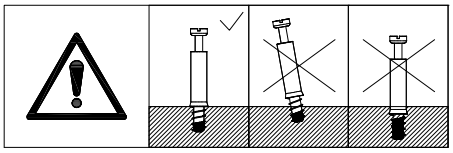

Secure the 12 screws A to plates 6, 12, 16 and 17 respectively

15

A x 12

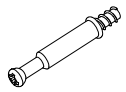

∅6 x 35 mm

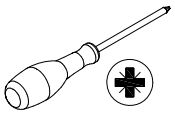

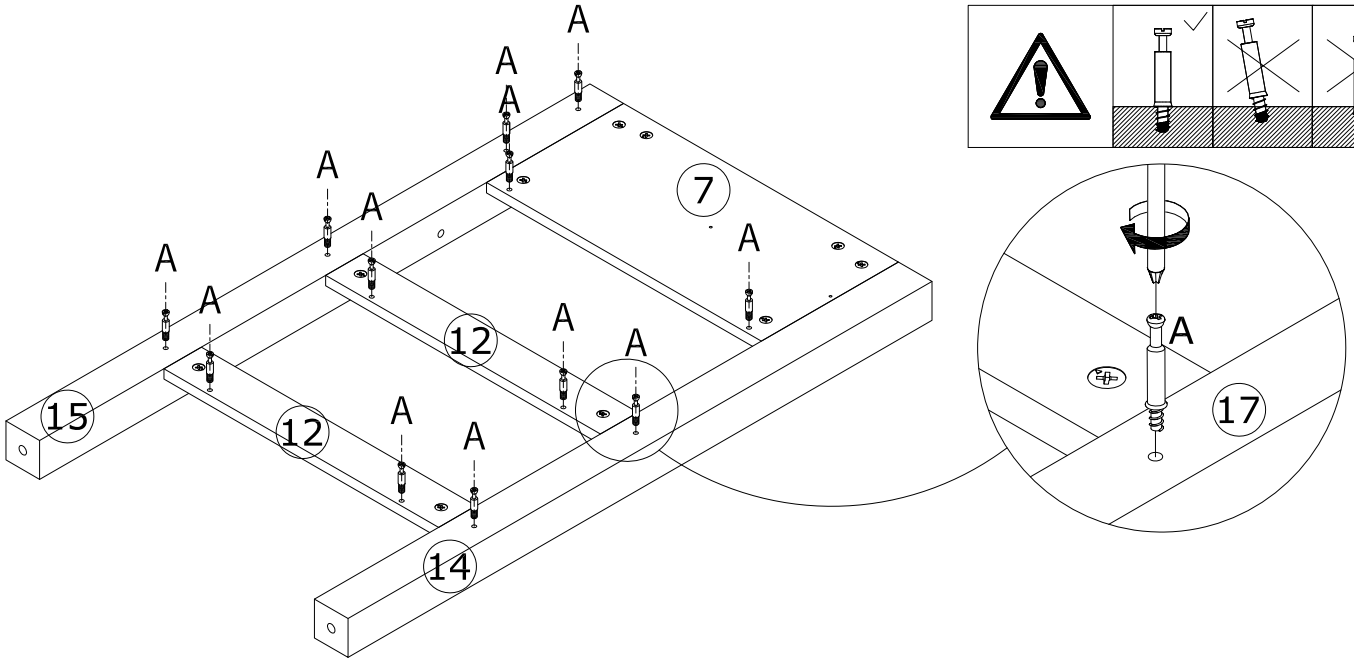

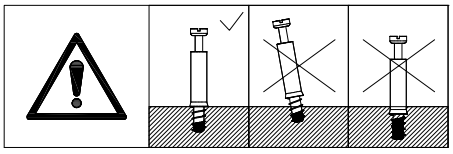

Secure the 12 screws A to plates 7, 12, 14 and 15 respectively

16

C x 24

∅12 mm

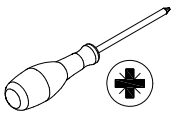

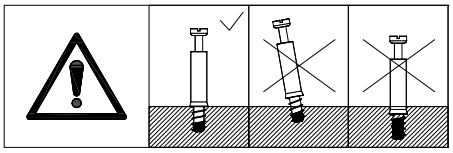

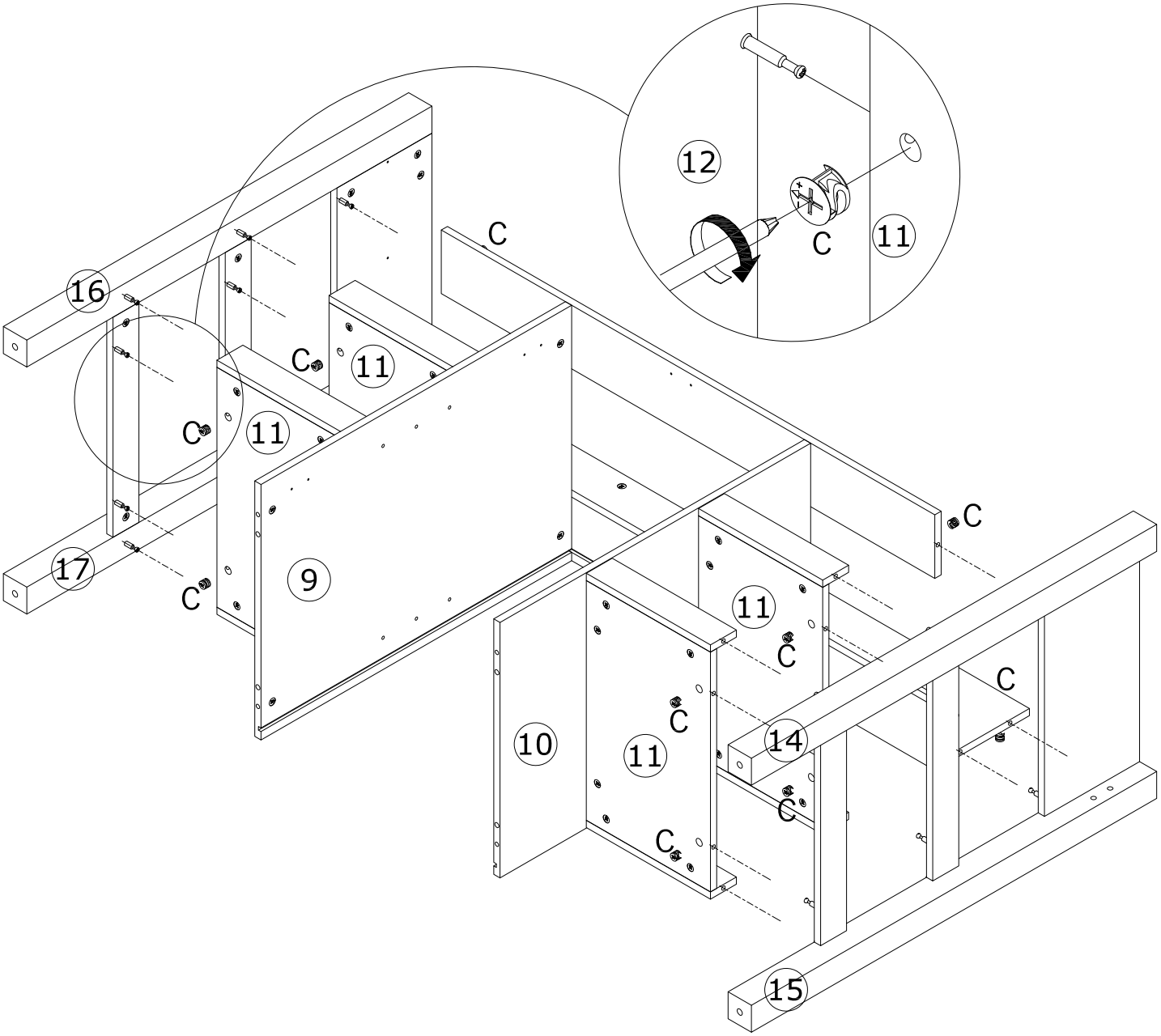

Secure the left and right side panels to the central cabinet

17

Insert backplate No. 26

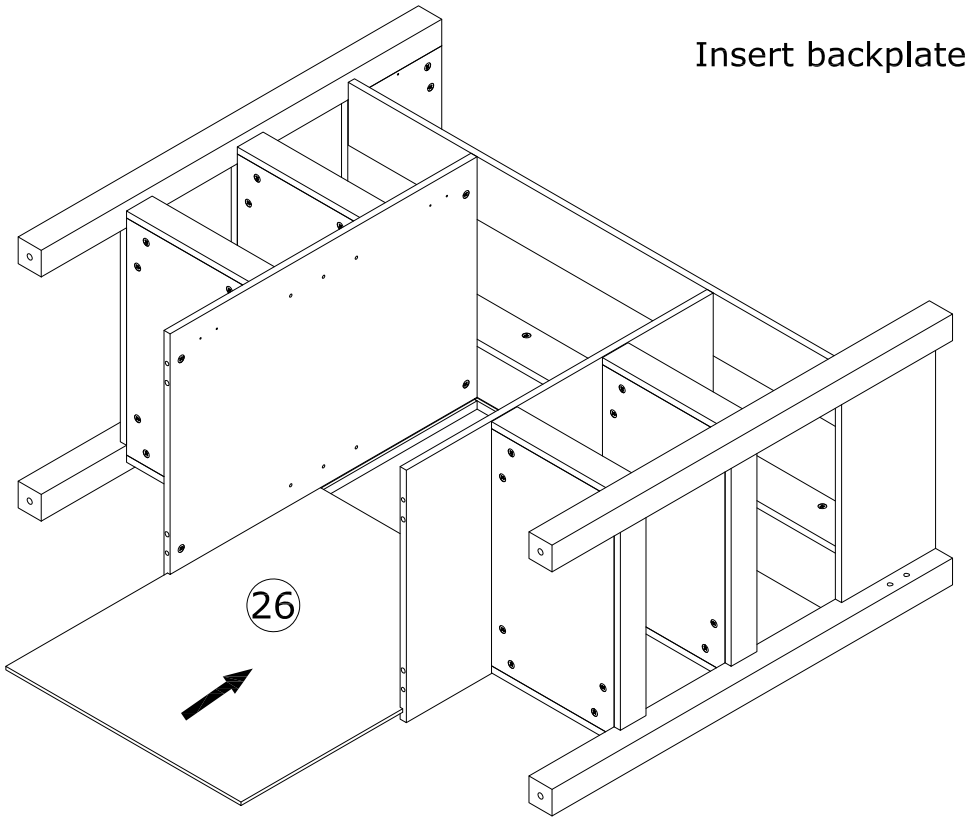

18

A x 4	D x 4	
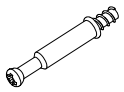 ∅6 x 35 mm	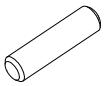 ∅8 x 30 mm	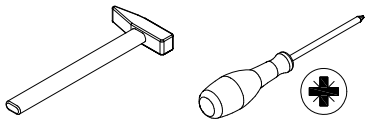

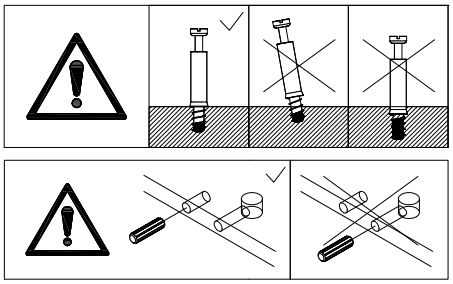

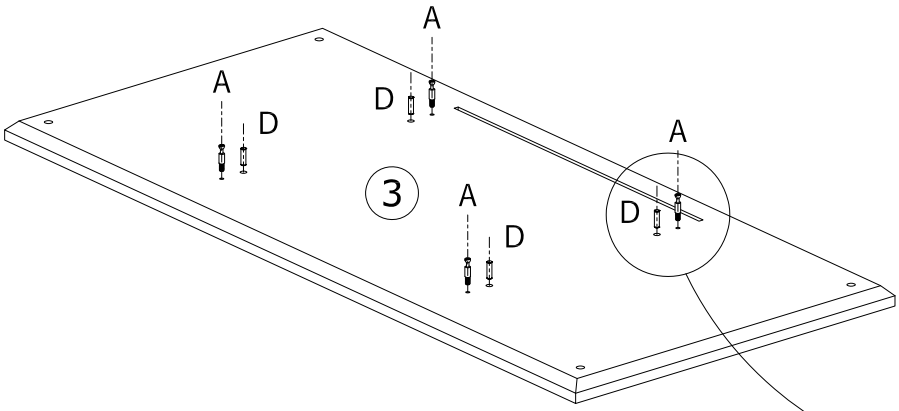

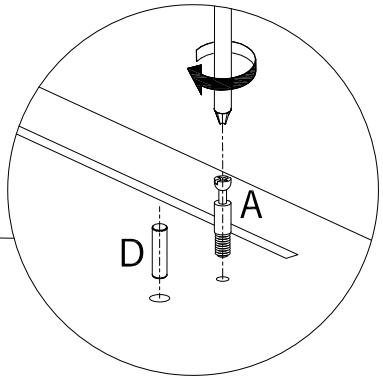

Secure the four screws A and the four wooden plugs D to board No. 3

19

B x 4

∅15 mm

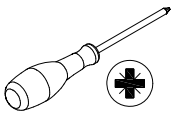

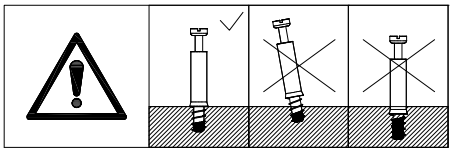

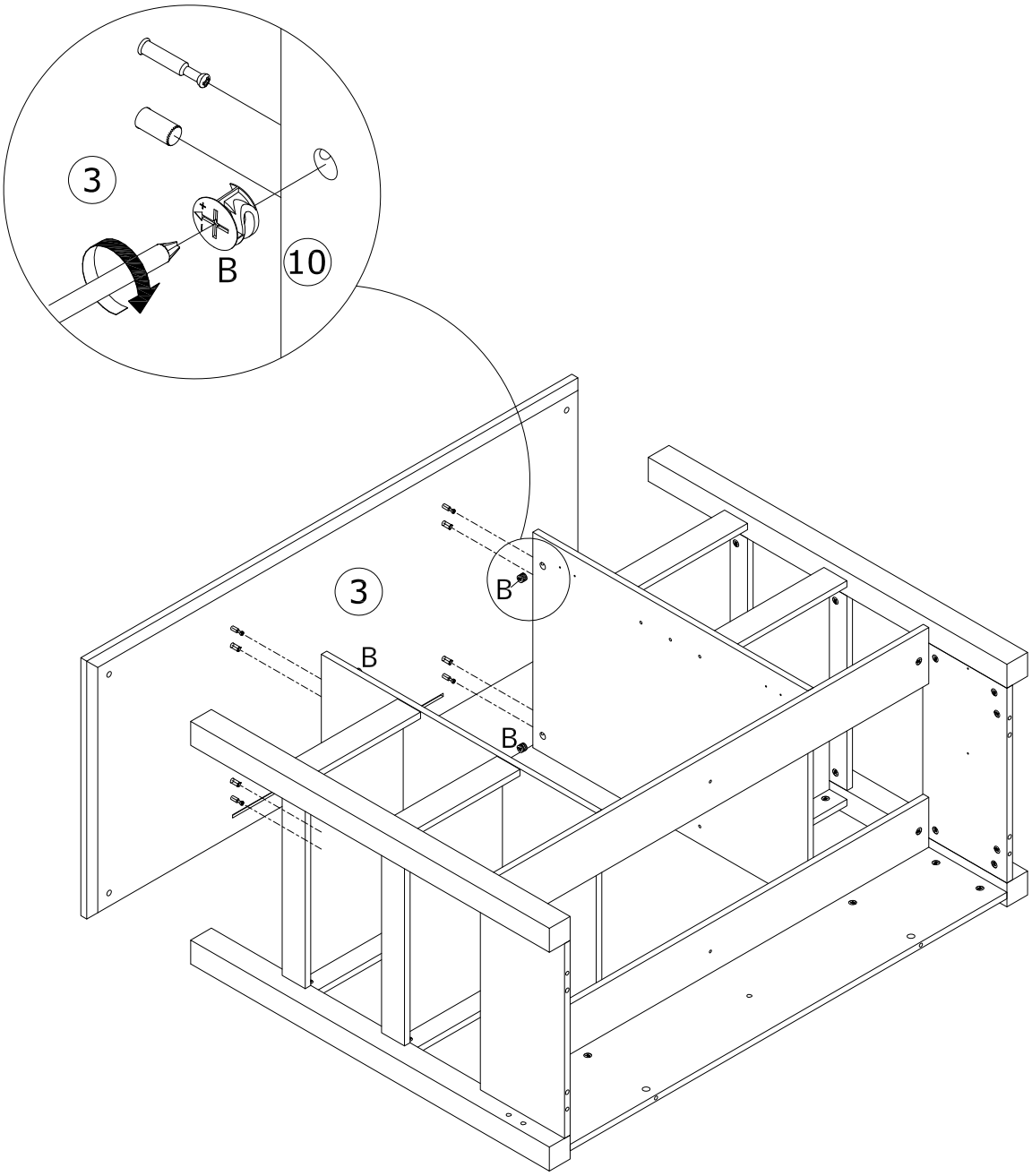

Connect the base plate to the main body

20

E x 4

∅8 x40 mm

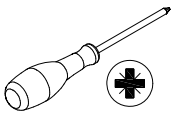

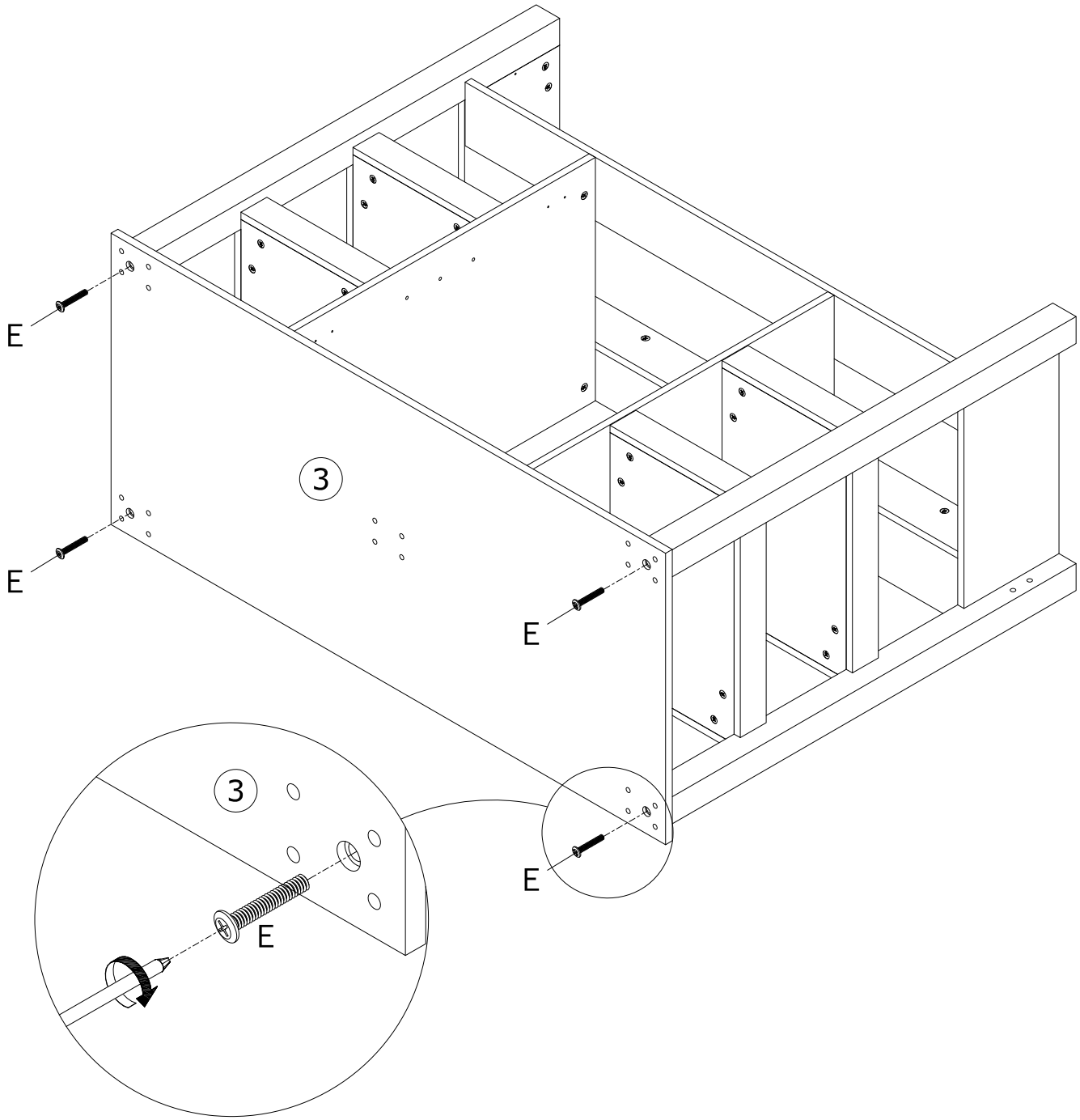

Insert 4 screws E from the bottom

21

G x 20	P x 4	Q x 1	W x 20	
				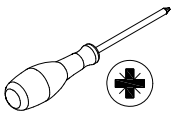

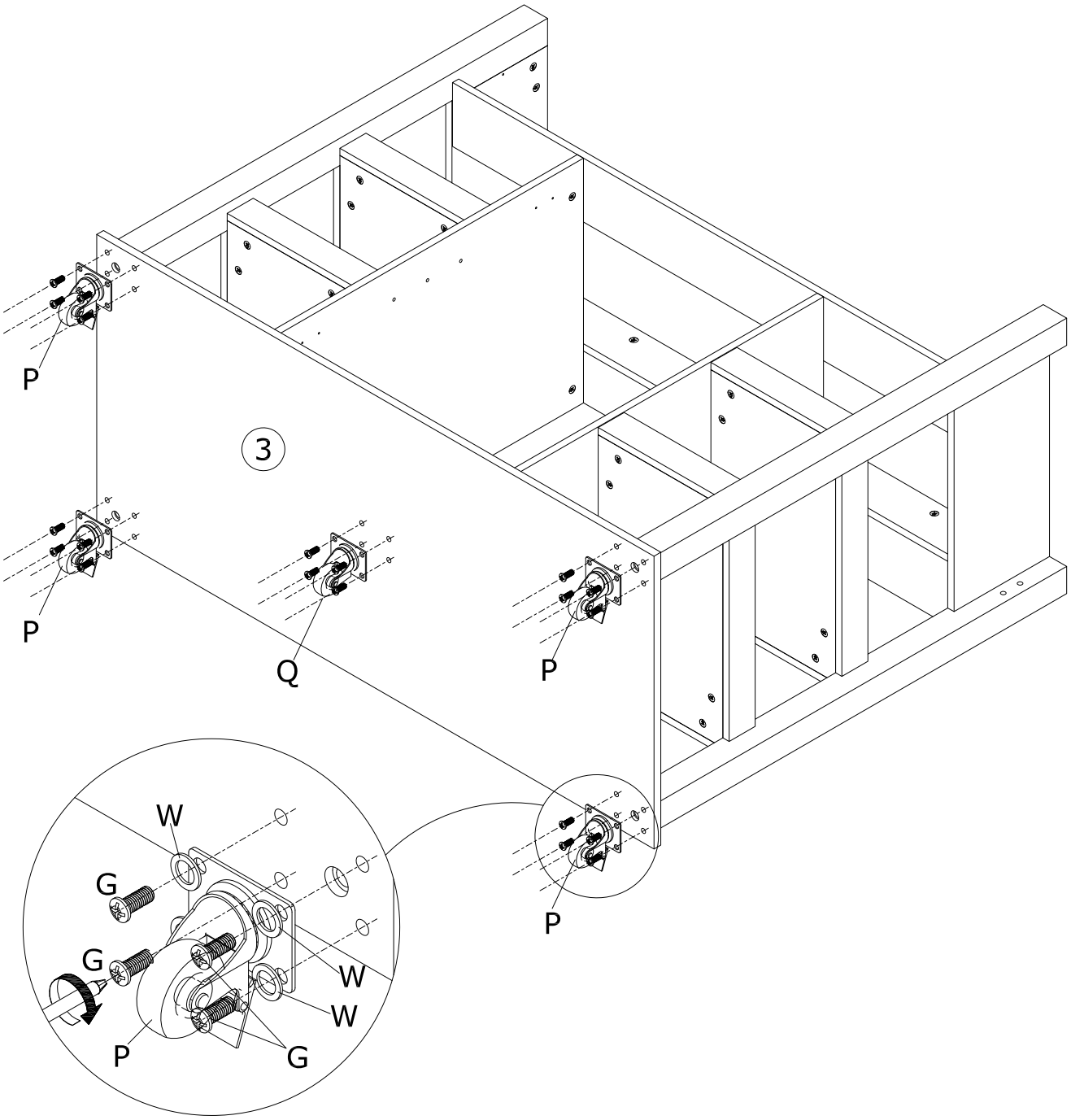

Fit four swivel castors P and one swivel caster Q onto board No. 3

22

A x 2	C x 2	
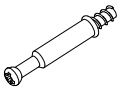		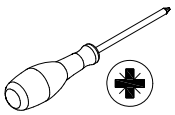
∅6 x 35 mm	∅12 mm	

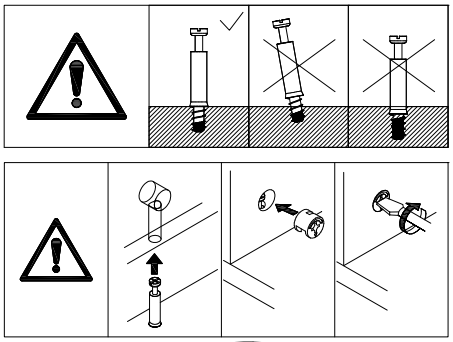

Please note: When fitting board No. 8, ensure that the side with the through-holes closest to the edge faces forwards.
Secure Board No. 8

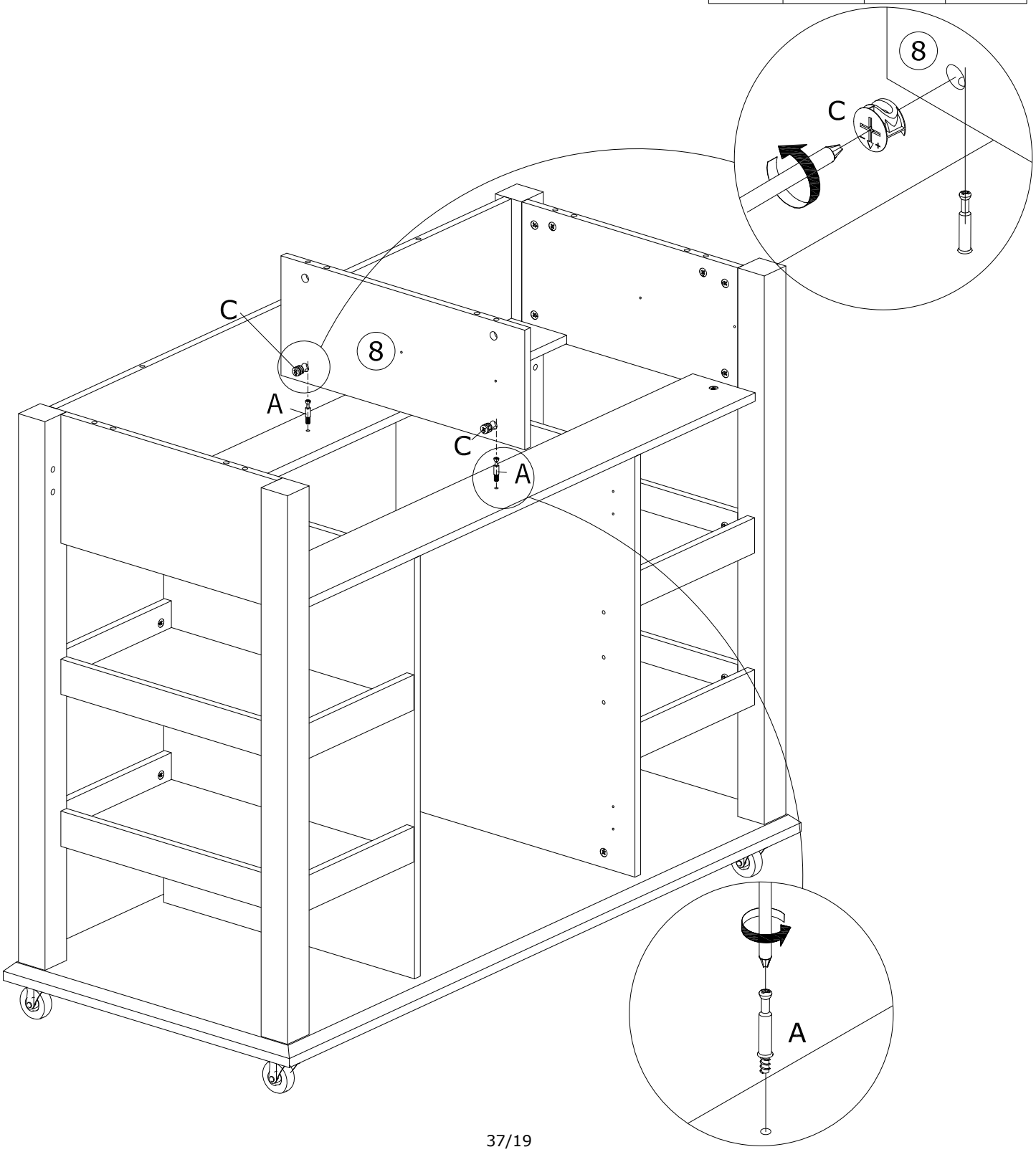

23

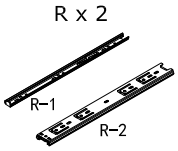

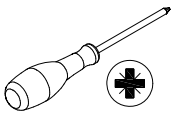

TIPS

How To Separate The Ball Bearing Slider:

1). Pull the slider in the direction of the arrow until it stops, then flip it over.

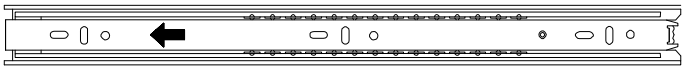

2). Push the plastic lever down and pull the slider apart at the same time.

3). After disassembly

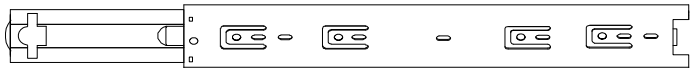

OUTER TRACK R-2

INNER TRACK R-1

How to Assemble the Slider

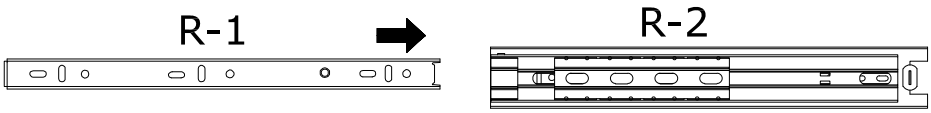

Align the outer track(H-2) with the center of the inner track(H-1) and push in.

24

I x 4	R x 2	
∅3 x 12 mm	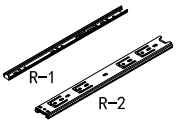	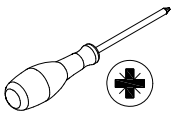

Fitting the guide rail R

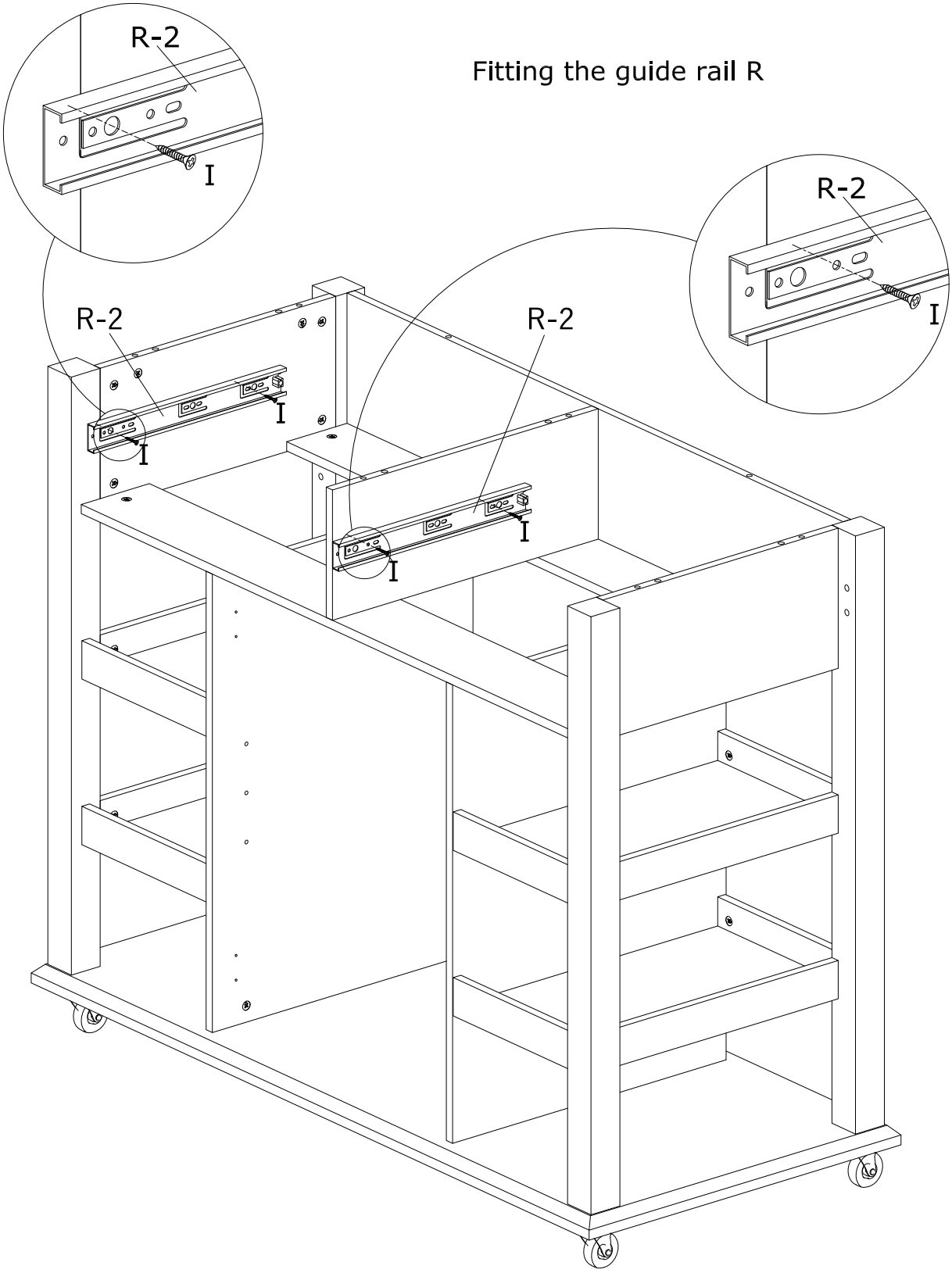

25

I x 4	R x 2	
∅3 x 12 mm	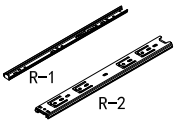	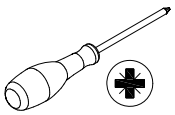

Fitting the guide rail R

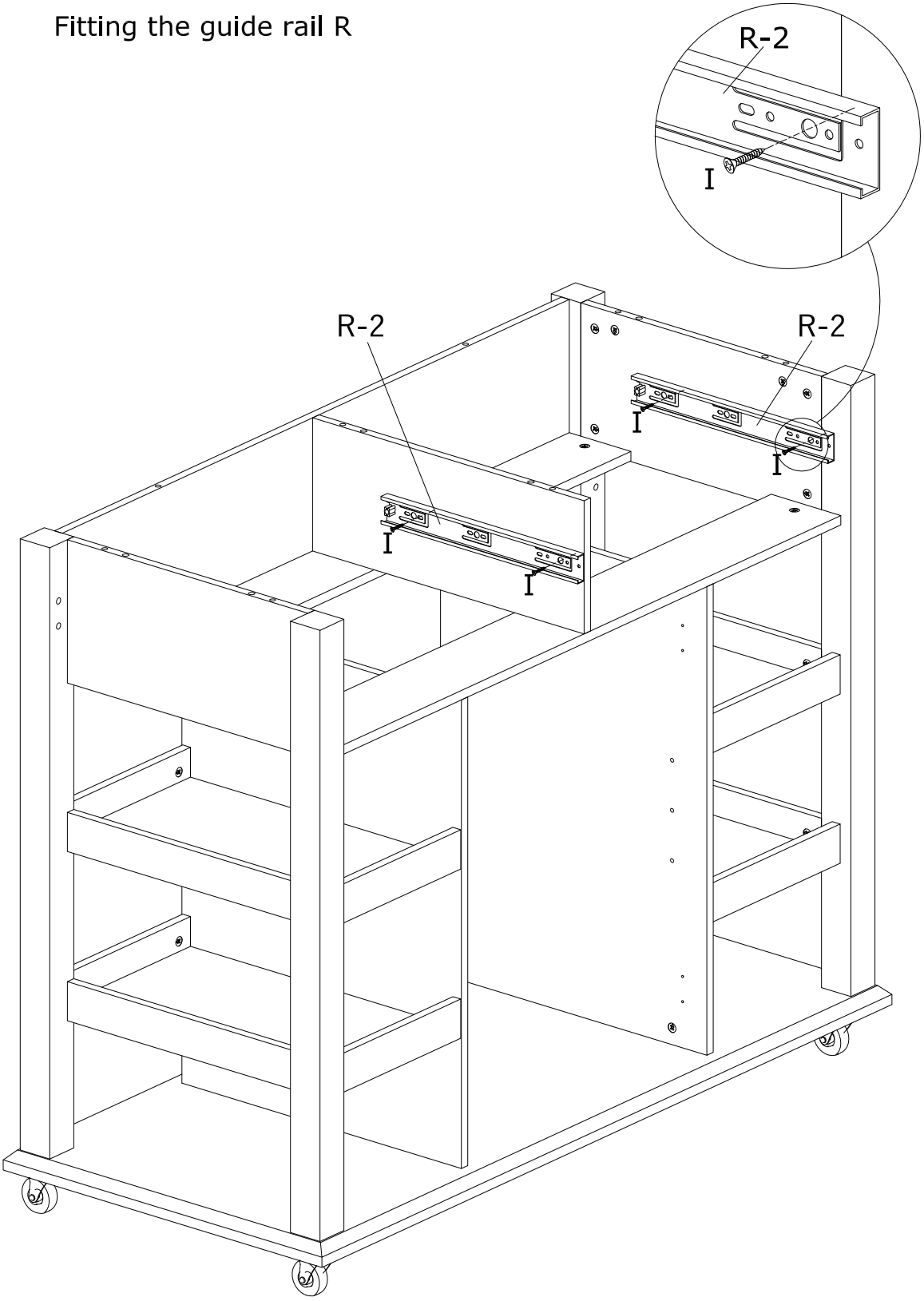

26

I x 24	U x 4	D x 6	
∅3 x 12 mm	1.5 in	∅8 x 30 mm	

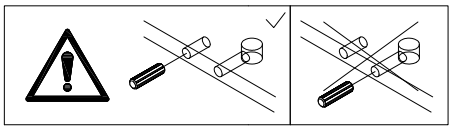

Secure panels 23 and 24

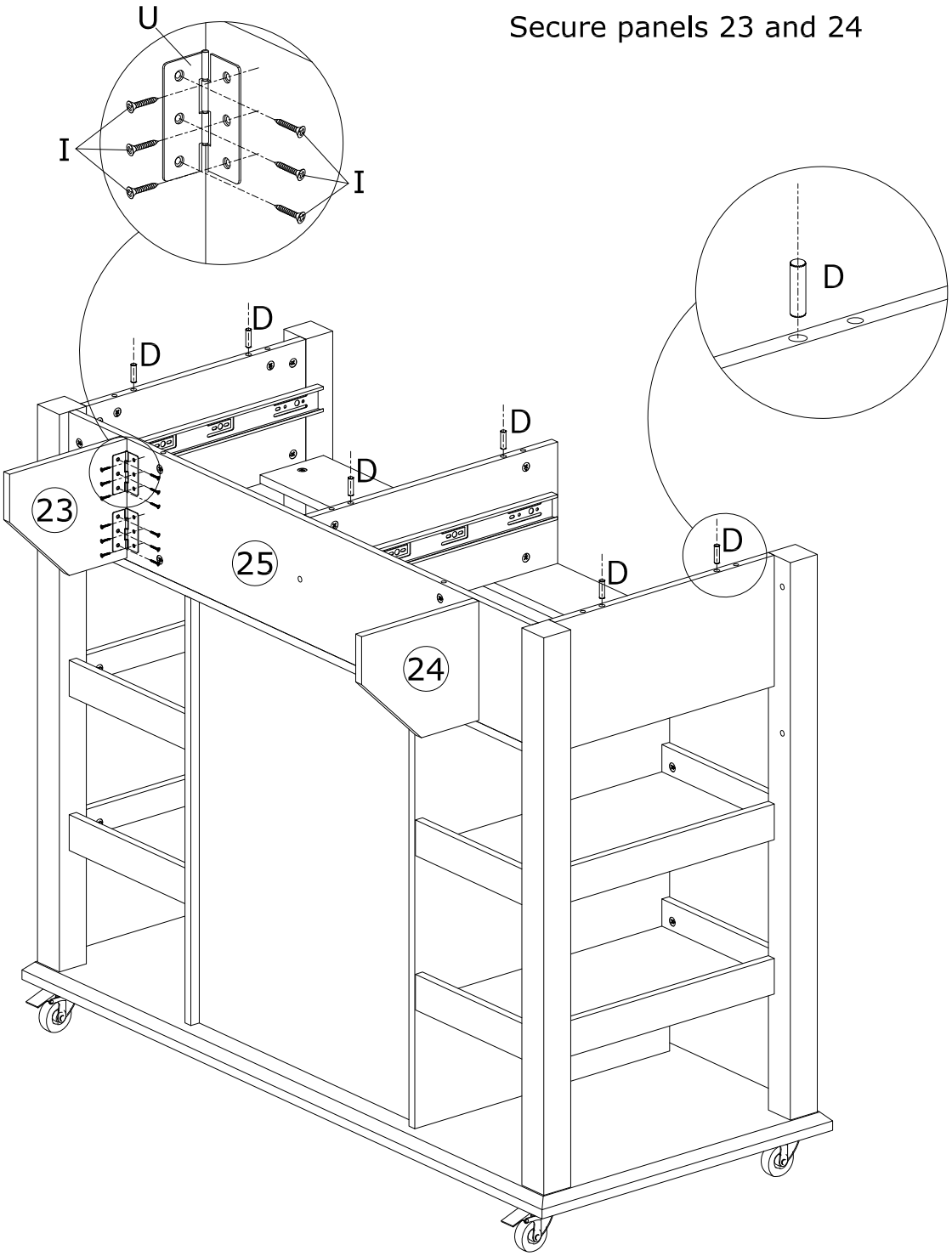

27

A x 8	H x 18	S x 3	
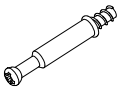		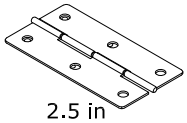	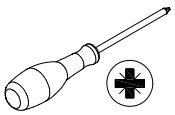
∅6 x 35 mm	∅4 x 14 mm	2.5 in	

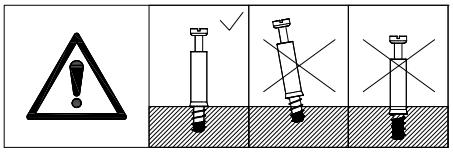

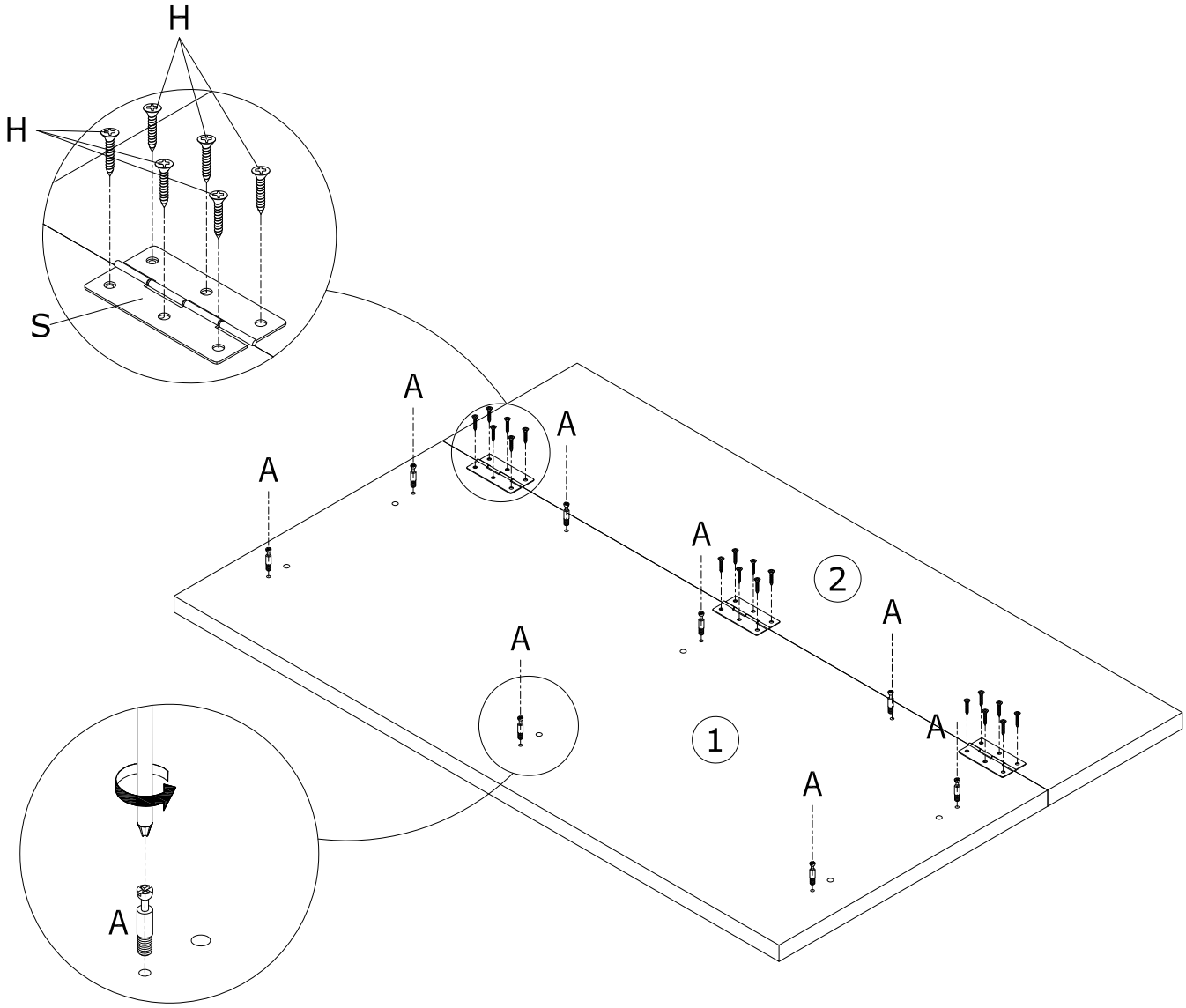

1. Secure the 8 screws A and 6 wooden plugs D to board No. 1

2. Secure Panel 1 to Panel 2 using three hinges (S)

28

C x 8

∅12 mm

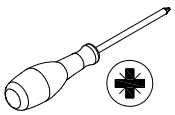

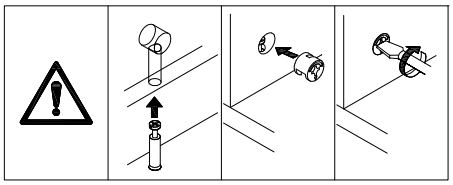

Fixed roof

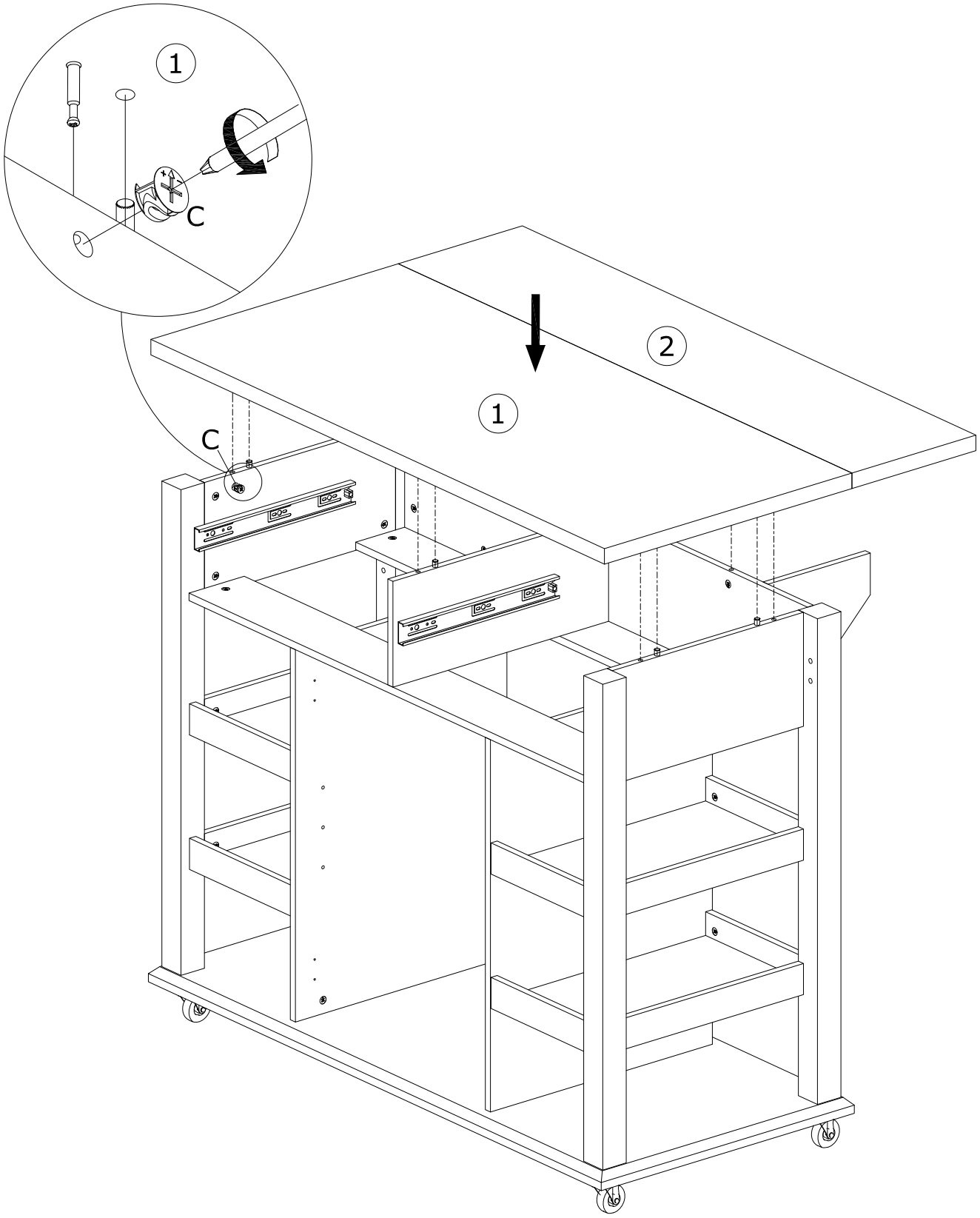

29

A x 8

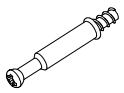

∅6 x 35 mm

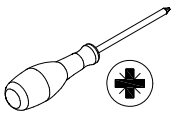

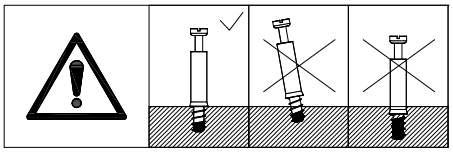

Secure the 4 screws A to board No. 28. Repeat this step twice.

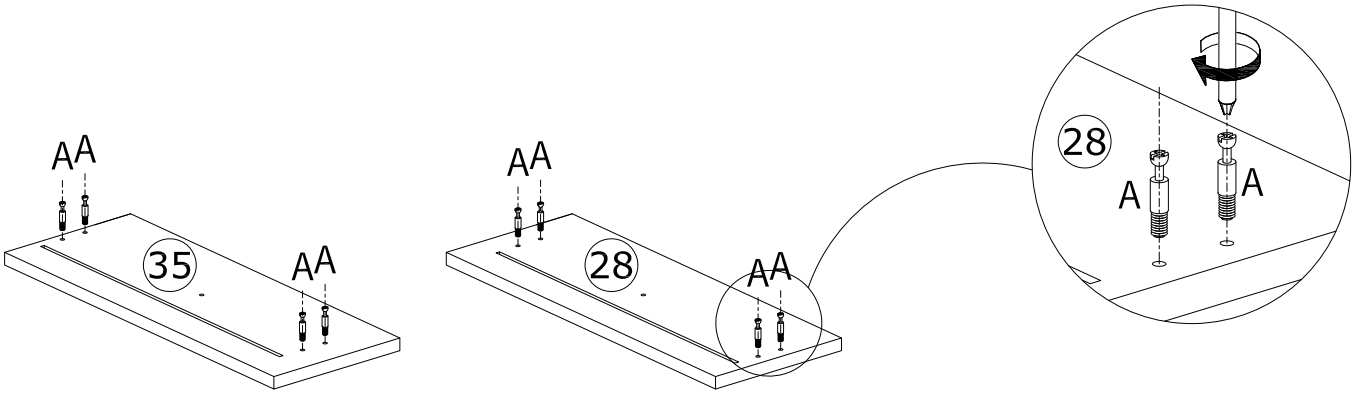

30

C x 8

∅12 mm

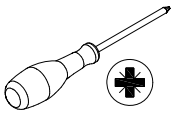

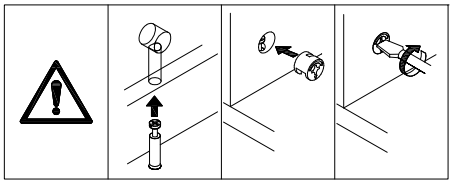

Fix panels 28, 29 and 30. Repeat twice.

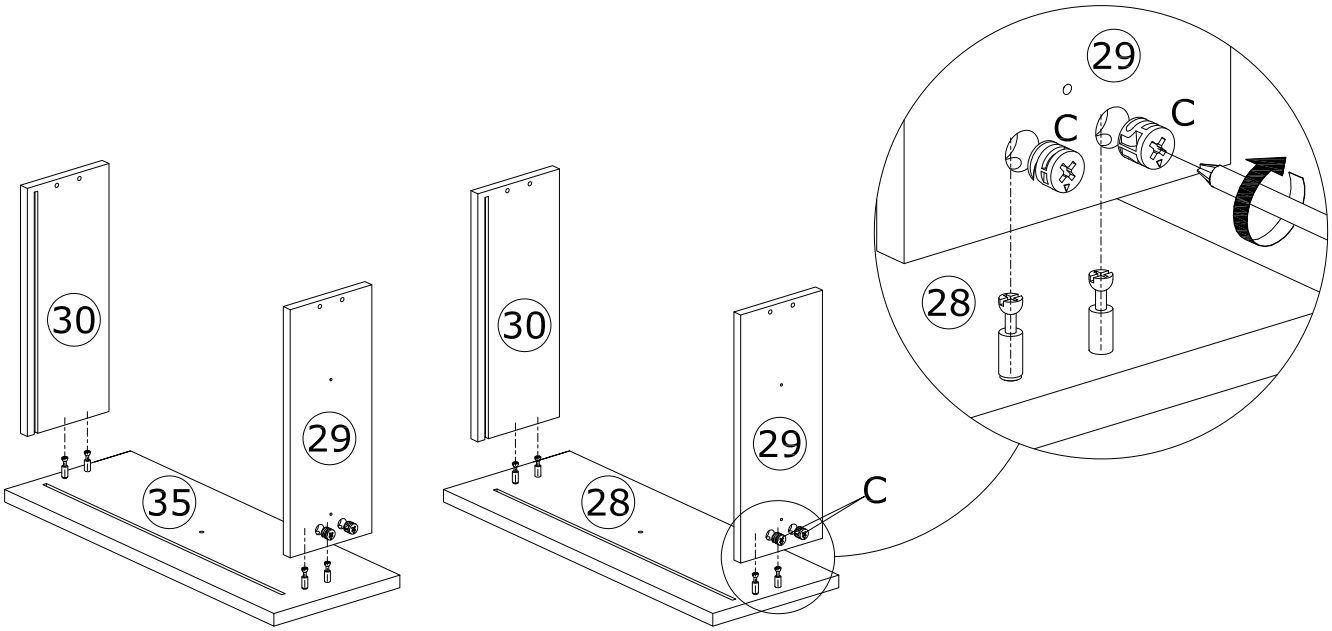

31

K x 8

∅4 x 35 mm

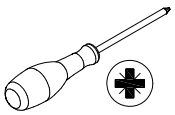

Secure panel No. 31. Repeat twice.

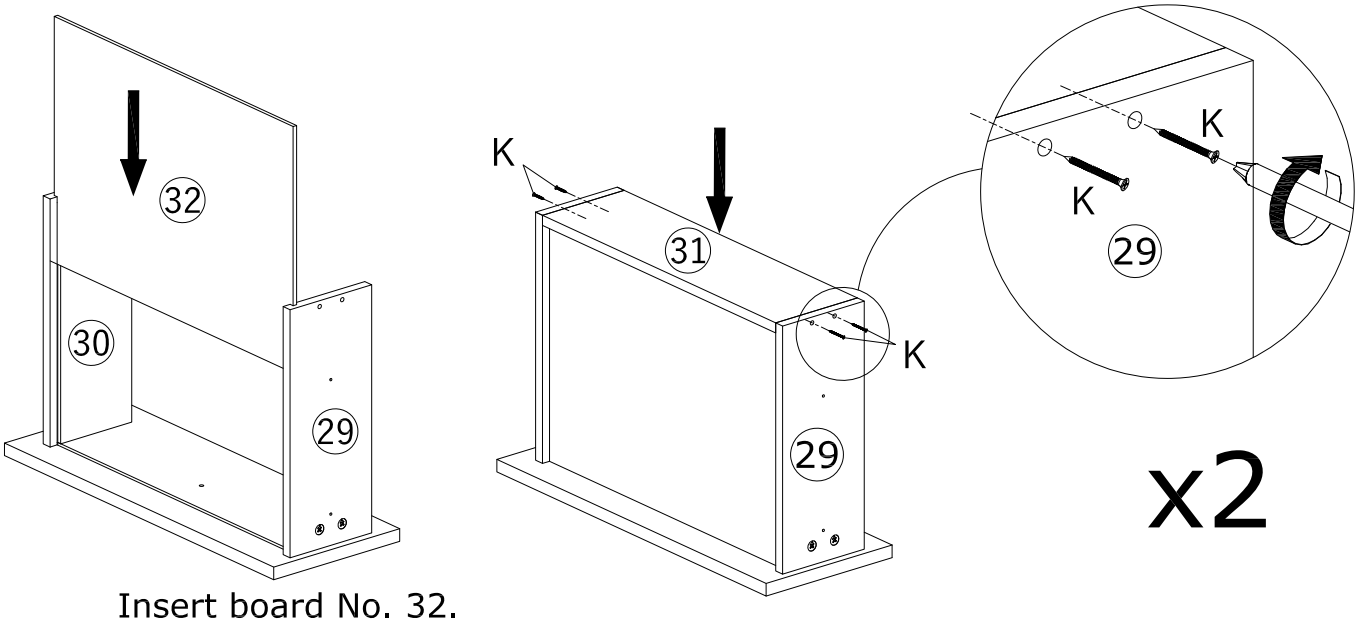

Insert board No. 32.

32

N x 2

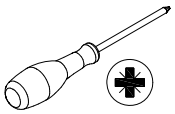

Fit handle N, repeat twice

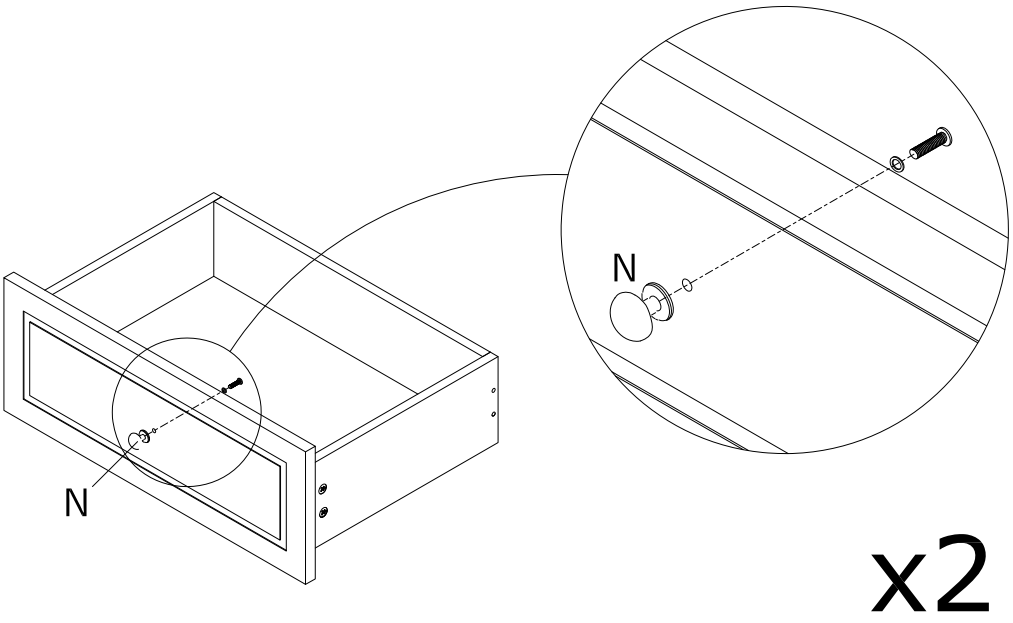

33

I x 16	R x 2	
∅3 x 12 mm	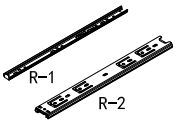	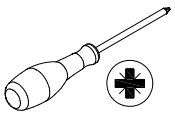

Fit the guide rails. Repeat twice.

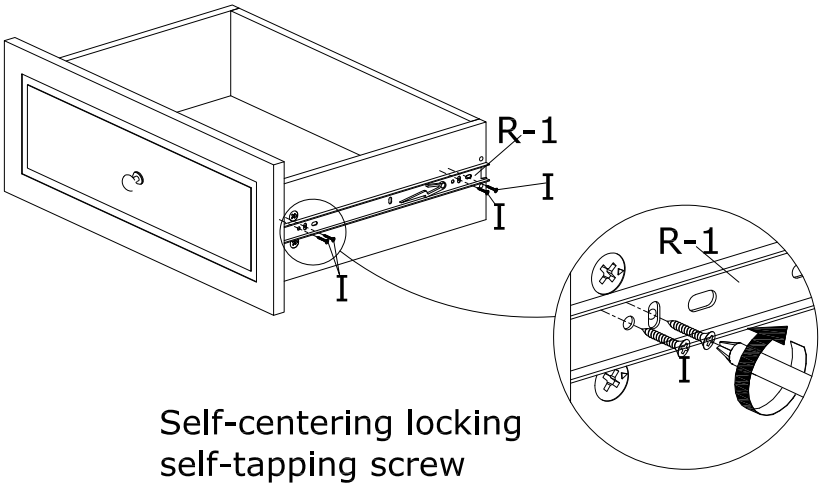

Self-centering locking
self-tapping screw

x2

34

Place in the drawer

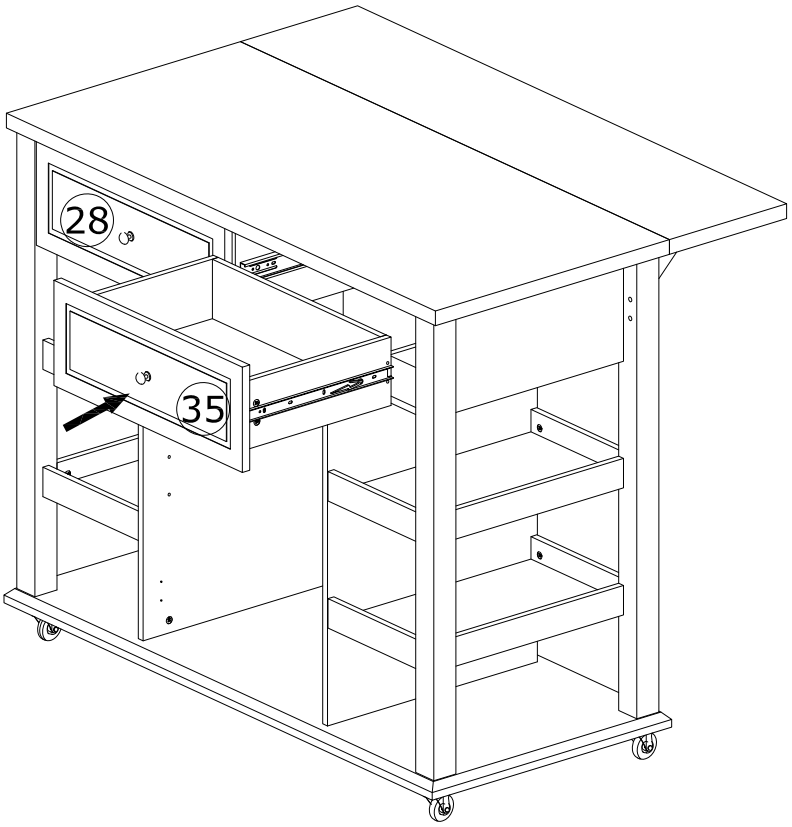

35

H x 8	M x 4	
∅4 x 14 mm	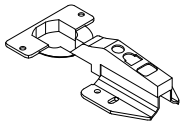	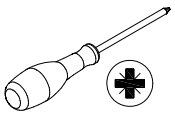

Fit two hinges M to board No. 27, and repeat this twice.

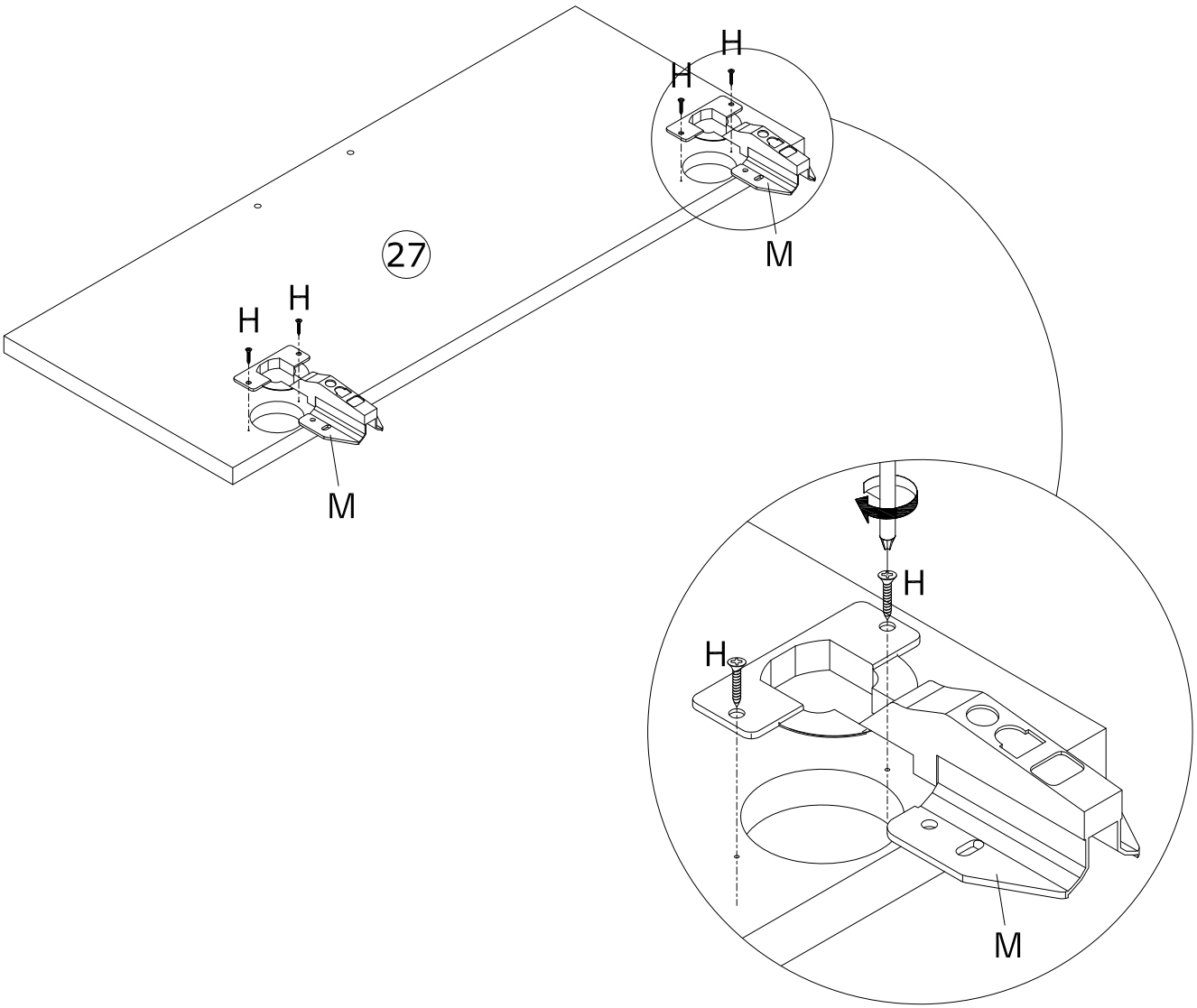

x2

36

H x 16	O x 2	
∅4 x 14 mm	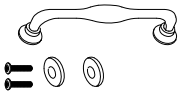	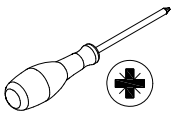

Fitting the door panels and handles O

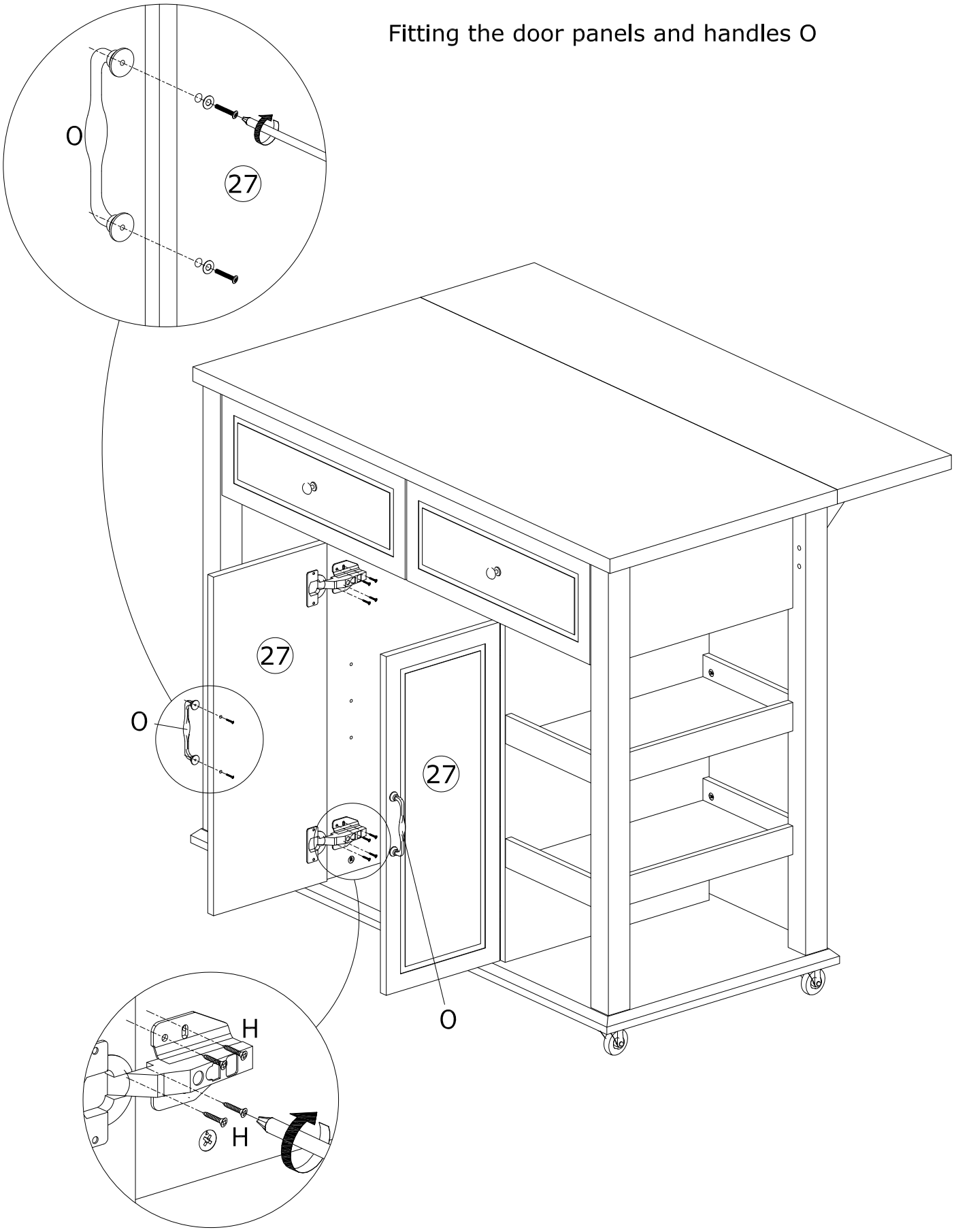

37

I x 2	L x 4	T x 2	
∅3 x 12 mm			

Fit door stop T and shelf clip L

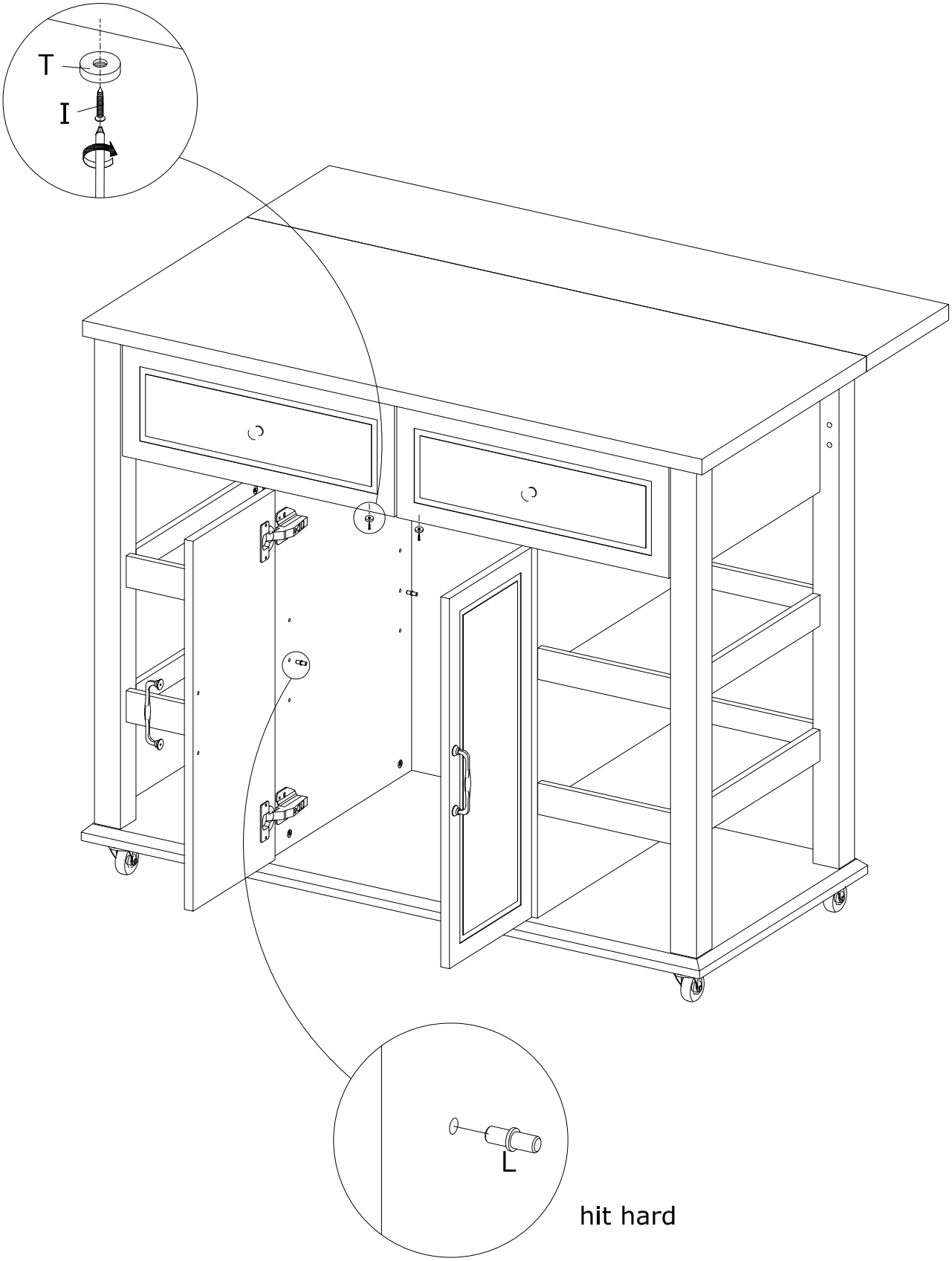

38

Place on shelf number 34

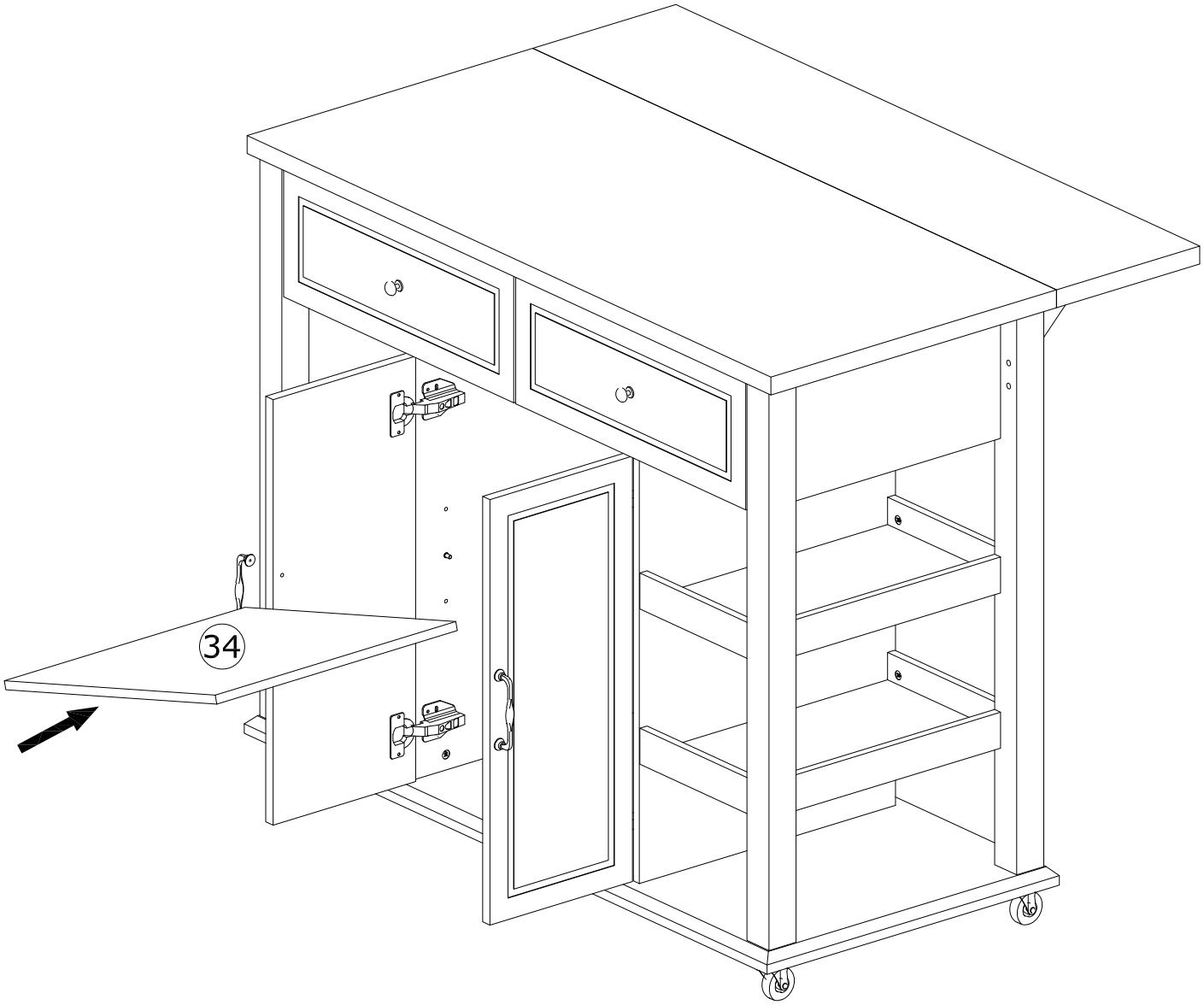

39

F x 4	V x 4	
∅6 x 25 mm		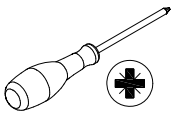

Secure plates 18 and 19 to the main body and fit component 33.

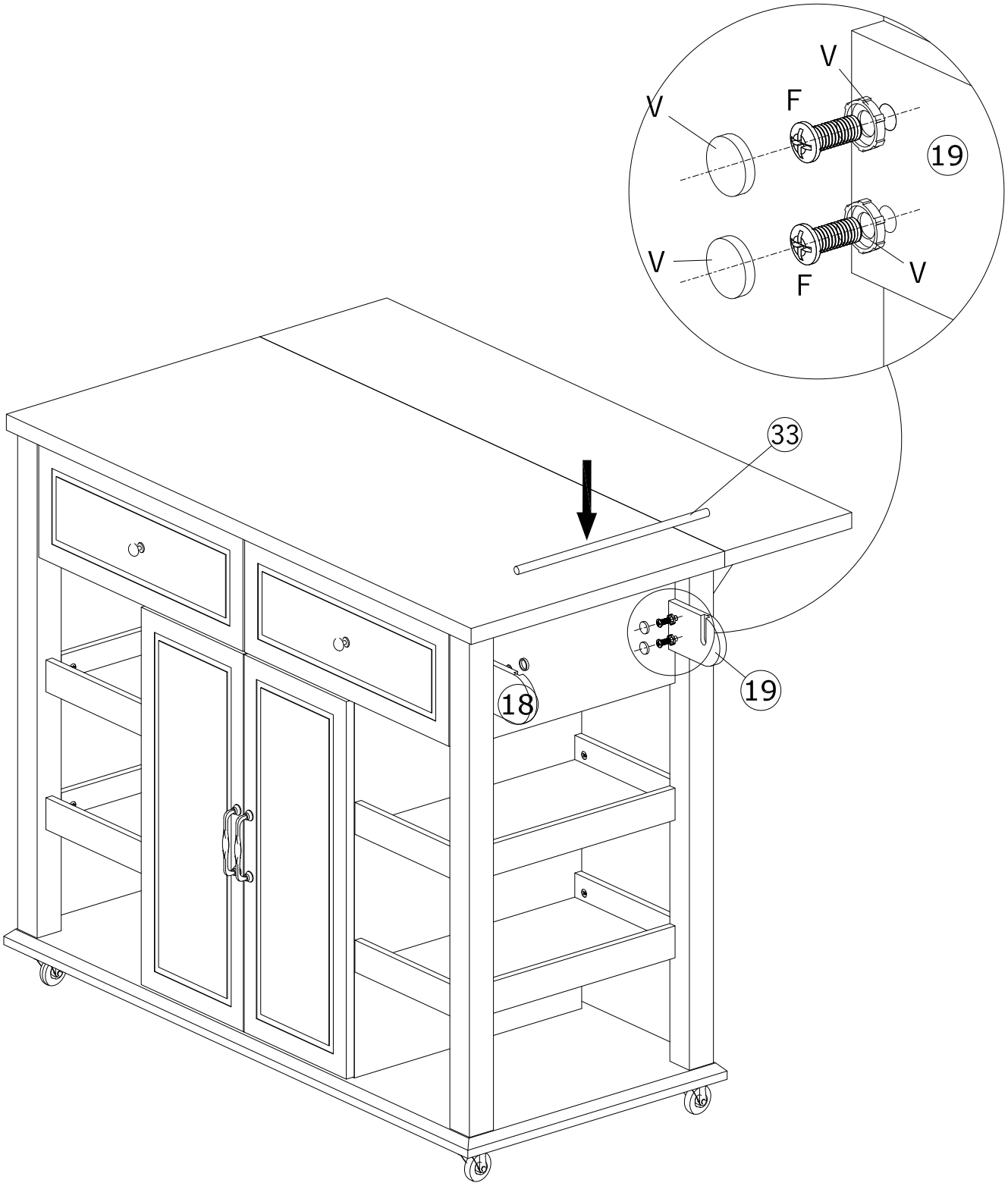

40

A x 4	C x 4	
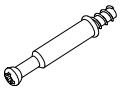		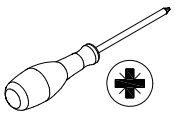
∅6 x 35 mm	∅12 mm	

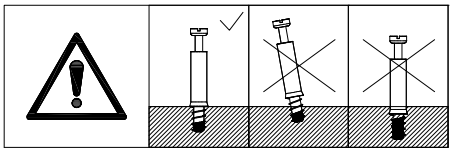

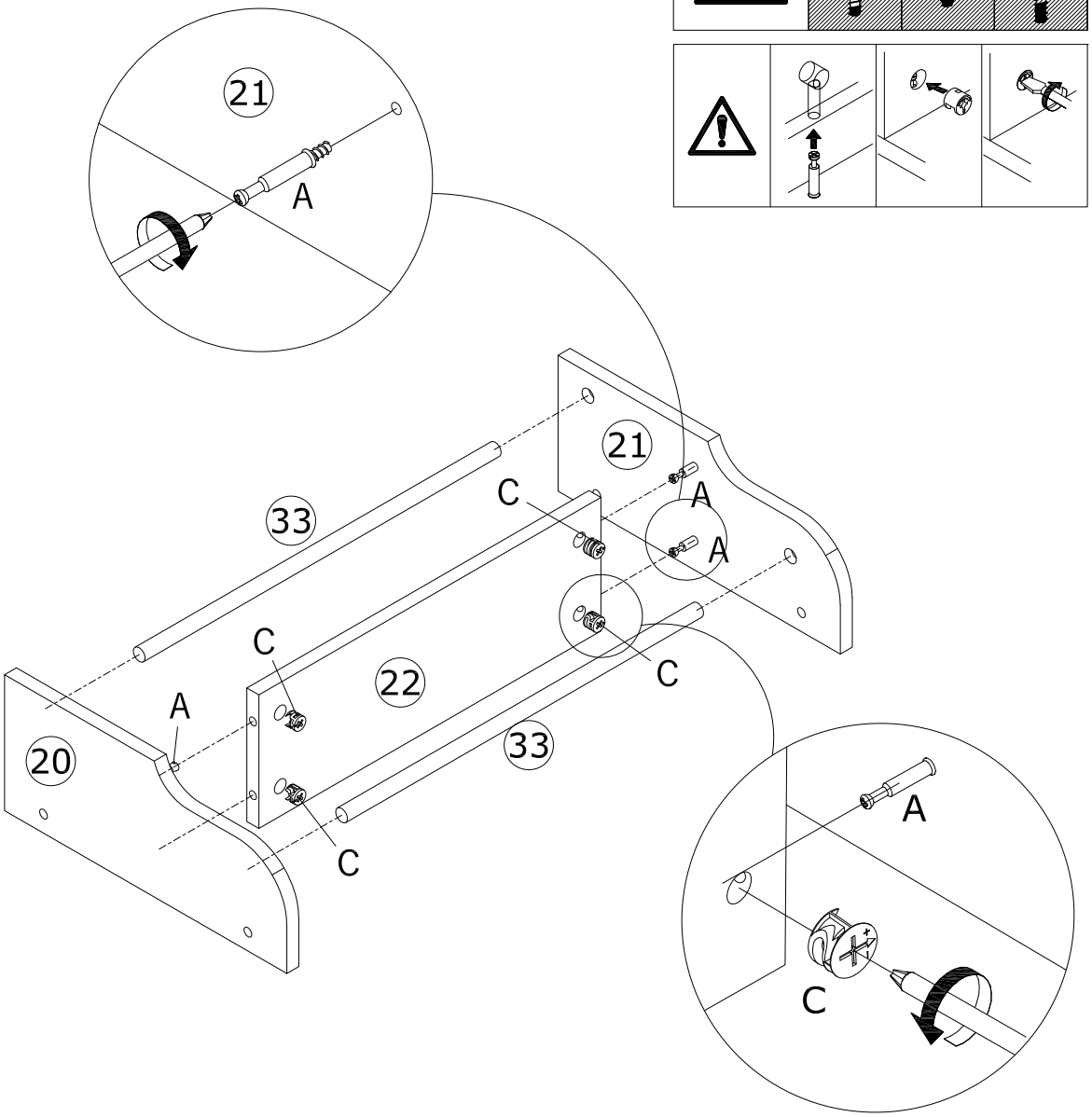

1. 1.Insert two screws A into plates 20 and 21 respectively

2. Secure 20, 21, 22 and 33 together

41

F x 4	V x 4	
∅6 x 25 mm		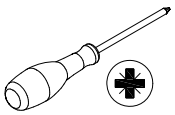

Secure the spice rack to the main body using four screws F

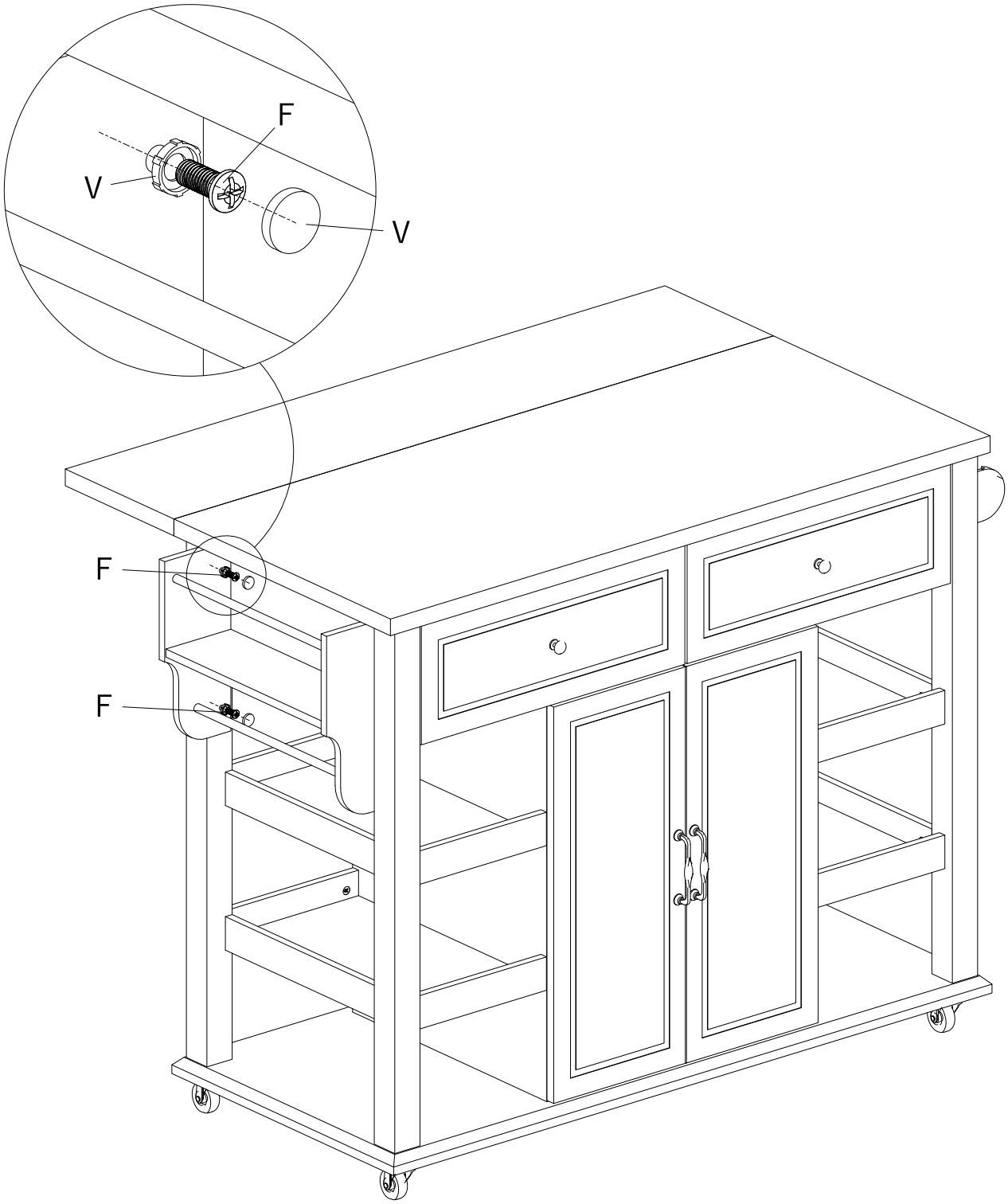

WARRANTY

WARRANTY CLAIMS

•There is a 30-day warranty for broken furniture or any other problems that do not work properly. The warranty will start from the date of purchase which must be verified by proof of purchase.

•Before making a claim, we may be able to answer your query, simply call us. Please leave your purchase order number, along with some details of the problem, if you want a replacement part. We will arrange within 48 hours. If there is out of stock, we will reply with a shipping date.

•The product must be used in accordance with the instructions provided. For health reasons.

•For other reasons, if the furniture needs to be returned, it must be cleaned and dried and operated within 30 days of receipt.

Type of Warranty Claim

•Failure to follow the furniture instructions will invalidate the warranty. Attention please.

•Does not include damage during installation, but includes damage during transportation.

Scope of responsibility

•Shall not bear any responsibility for misuse or user damage and / or loss of parts during the installation of furniture.

•After using, the damage and scratches of the furniture are not covered by the warranty.

The Warranty Relates to All Bought in The Us and Covers The Following Areas

•Sheet parts: 1 month from the date of purchase.

•Electrical parts: 1 month from the date of purchase.

RETURNS

CHANGED YOUR MIND AND NEED TO RETURN YOU ITEM?

PLEASE FOLLOW THE BELOW INSTRUCTIONS:

- If you have purchased and have simply changed your mind, follow the retailer's instructions for returns.

DEFECTIVE ITEMS

- If your item is defective in any way, i.e. it doesn't work but you can't identify why, in the first instance, please call us.

DAMAGED ITEMS

- If you receive an order with obvious shipping damage from the retailer, then we suggest the delivery is refused. If the delivery has been accepted and then shipping damage is found, please follow the specific instructions advised by the retailer.
  In all circumstances please save all packaging material and paperwork for the order. Please be aware that if you dispose of packaging material or attempt to return the merchandise without contacting the fulfiller, you jeopardise your chances of making a claim, and you may not receive a credit for the return.

AFTER-SALES CONTACT

adelahu@fufugaga.com

208-820-0068