AOODOR TECH

Assembly&Instruction Manual

SKU: A269

Carport assembly Installation Guide

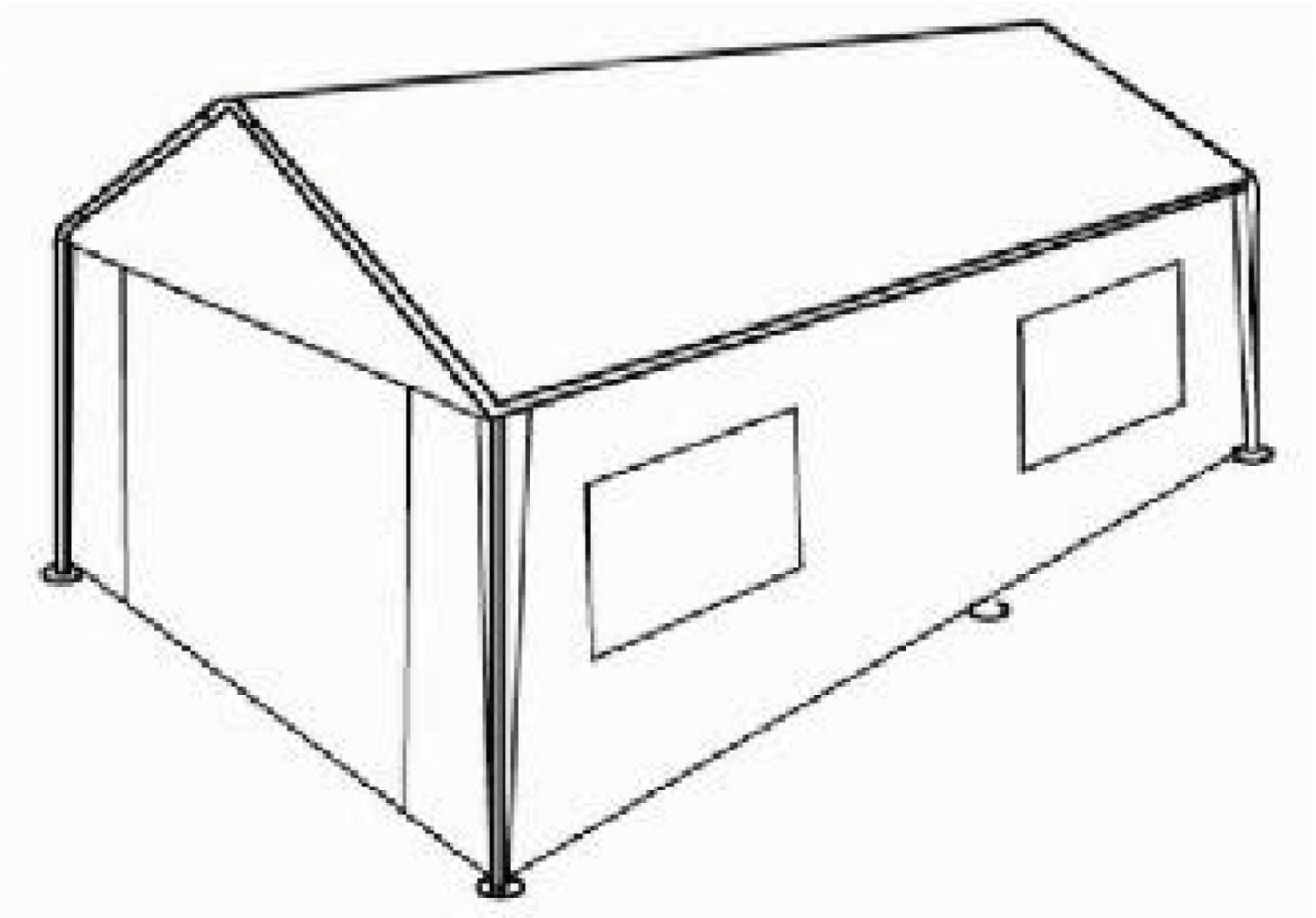

PACKING DETAILS:TOTAL 2 BOXES

Version:20240222

Approximate assembly time: 60 Minutes	People for assembly:	

Save this manual for future reference

Parts Identification

BOX-1/2

Parts	Component	QTY	Ref No	Parts	Component	QTY	Ref No
1		4	8A490-A269-001	1a		4	8A490-A269-002
3		9	8A490-A269-003	4		4	8A490-A269-004
5		4	8A490-A269-005	6		2	8A490-A269-006

BOX-2/2

Parts	Component	QTY	Ref No	Parts	Component	QTY	Ref No
A		6	8A490-A269-007	B		6	8A490-A269-008
C		8	8A490-A269-009	10		80	8A490-A269-010
11	M6X45	12	8A490-A269-011	12		16	8A490-A269-012
13		4	8A490-A269-013	14		16	8A490-A269-014
15		2	8A490-A269-015	16		4	8A490-A269-016
17		1	8A490-A269-017	18		2	8A490-A269-018
19		2	8A490-A269-019				

Please choose a suitable place before putting up the carport,
you can insert the figure 9 nail and screw nail, this is very important for the carport.
Please read the instruction manual carefully before using it.
Please assemble strictly in accordance with the instruction.
Please double check to the ensure that all parts of the package contents intact.

1 Assembled roof tube

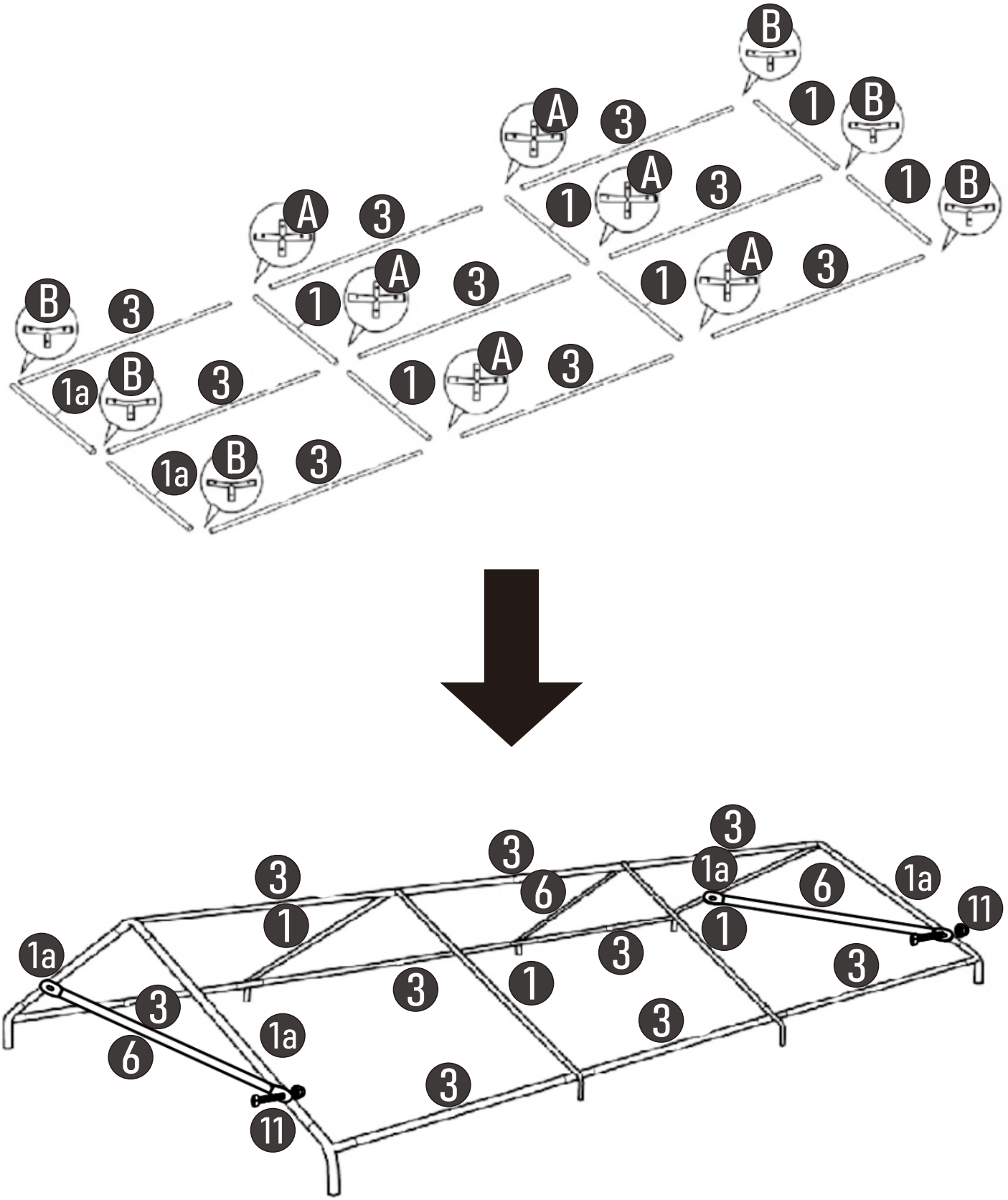

2 Assembled one side of the leg tube

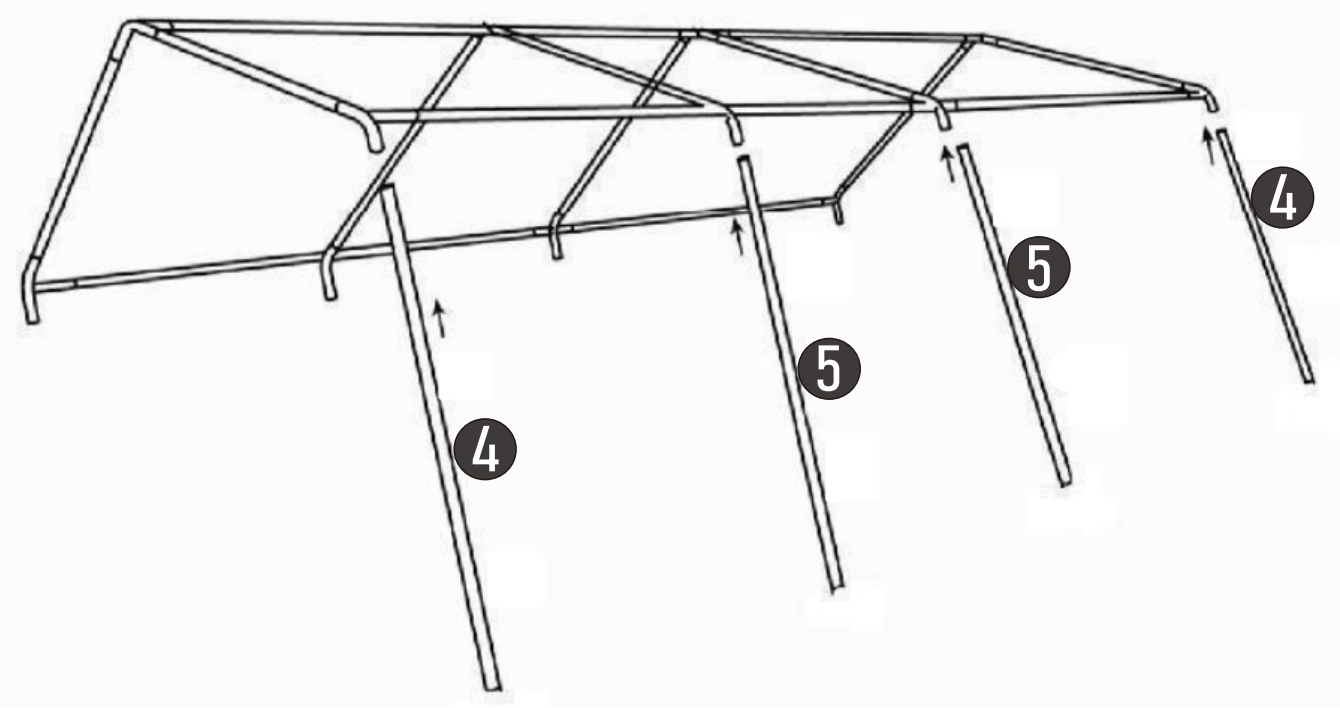

3 Assembled the cover ⓱ ,Connect the roof to the frame with marbles ⑩

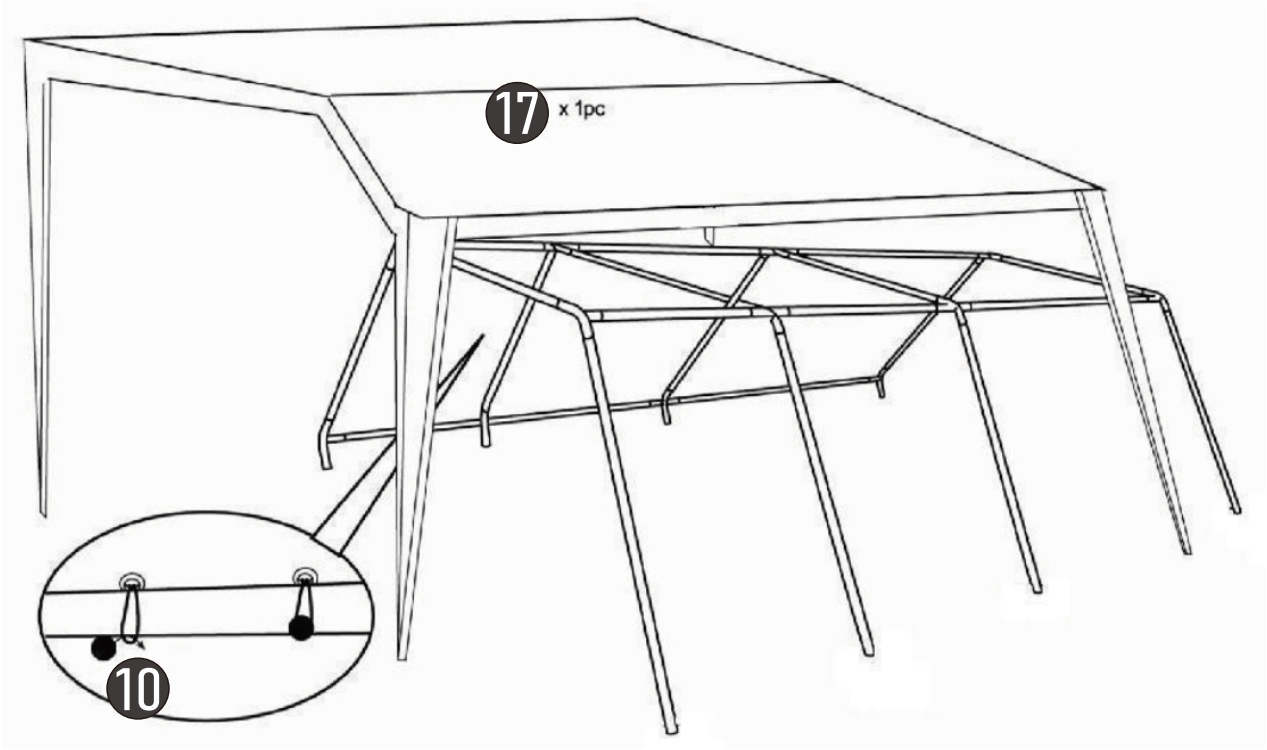

4 Assembled another side of the leg tube

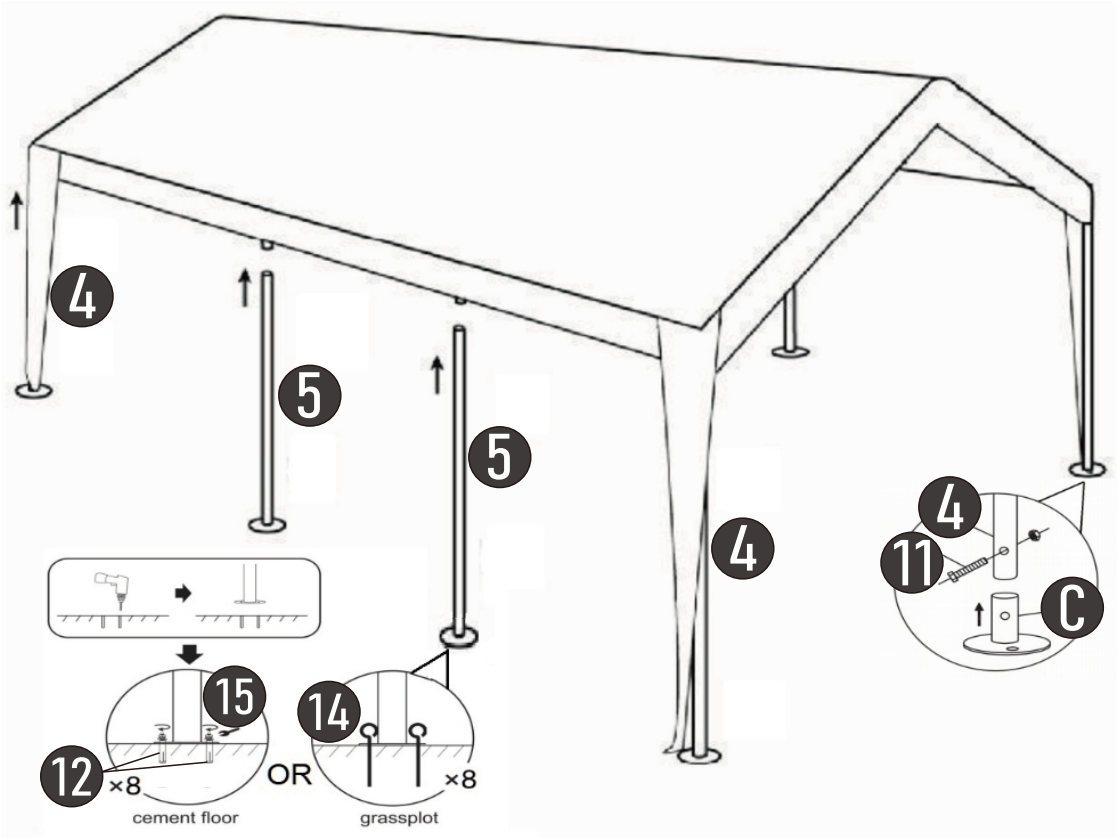
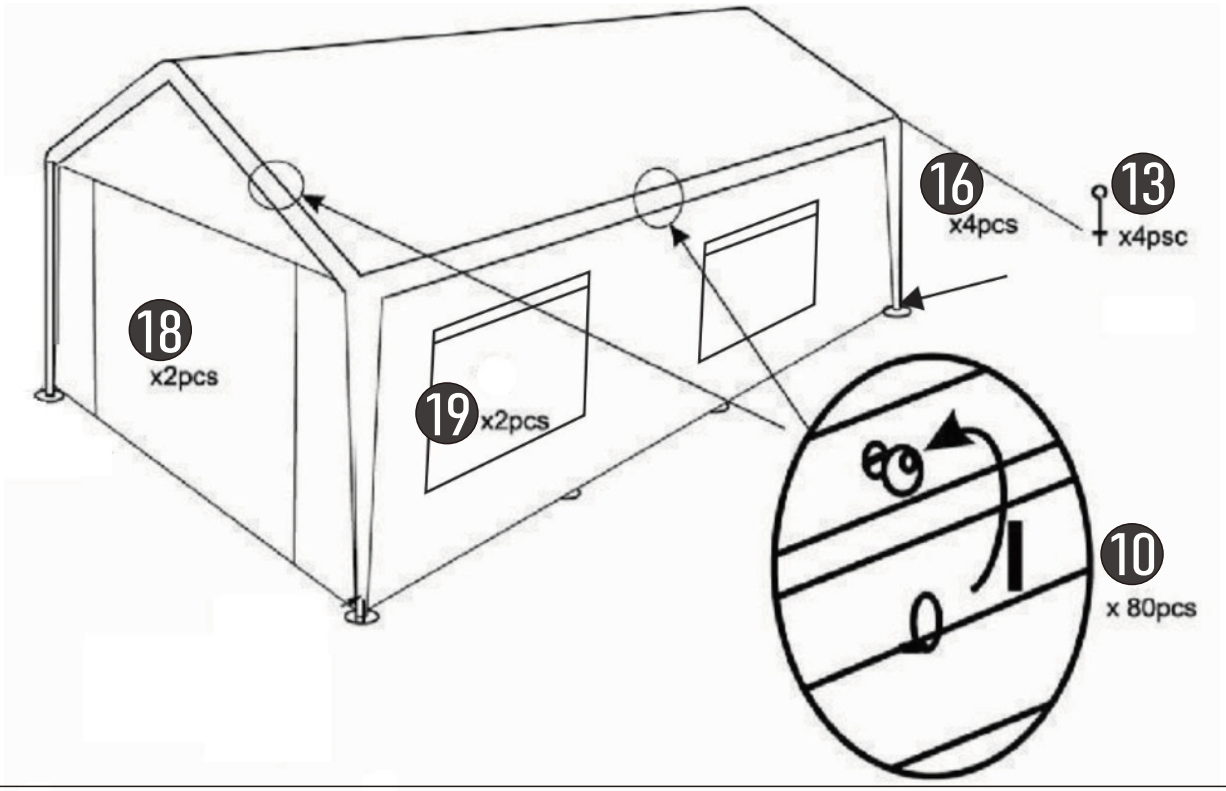
5 Assembled the front , rear and side walls , fix them with marbles 10 ,and fix the carport with rope 16 and peg 13