SERA BATHROOM DESIGNS

MWT60X36RSB

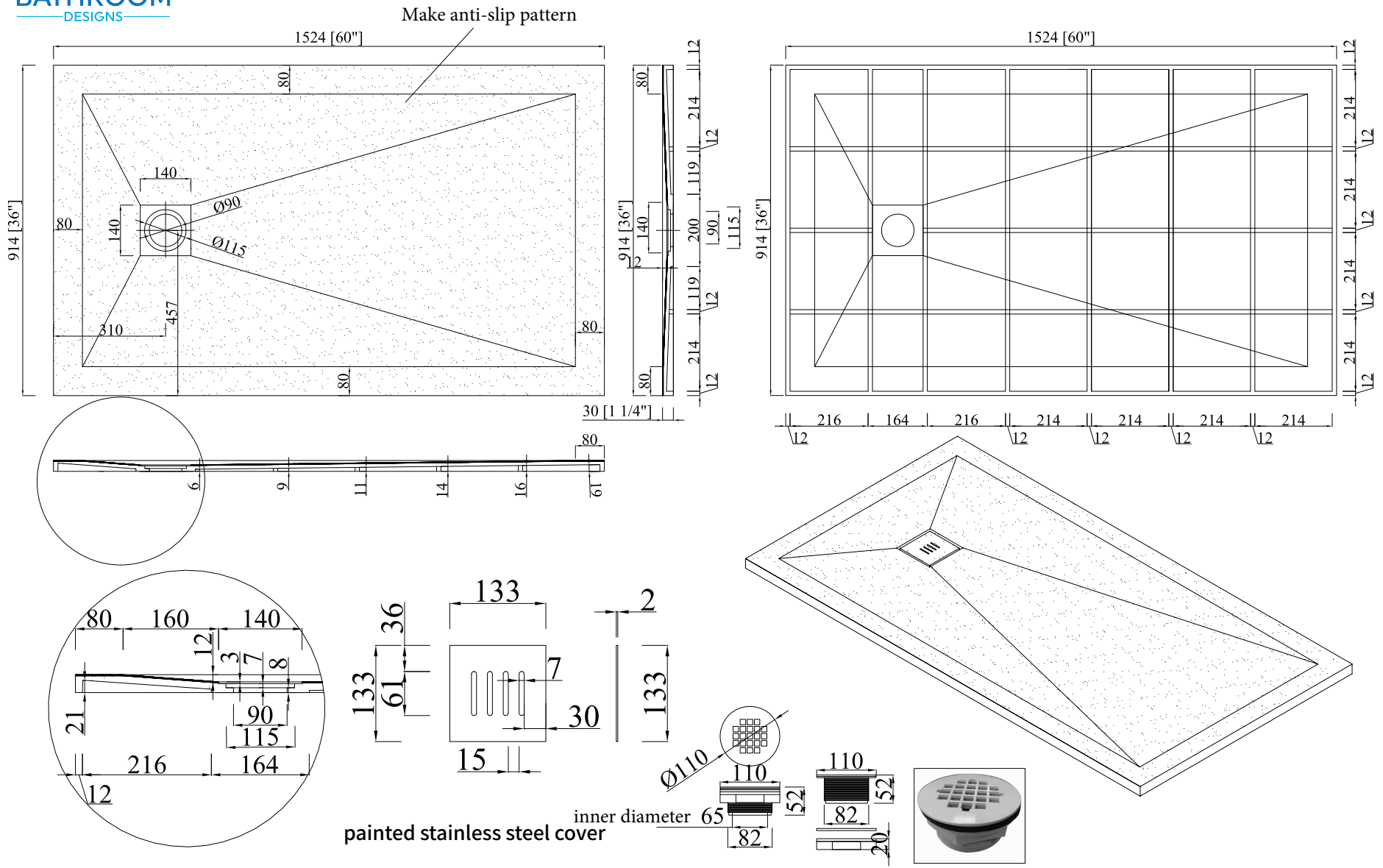

Size	>0-300mm	>300-500mm	>500-900mm	>900-1200mm	>1200mm以上
mm	±1	±2	±3	±4	±5

Model	GM-3133	Customer Model	CSTM-3117-6036	Drawing No	GM20240528-01
Checker		Edition	A/2		
Tolerance	±2	Start Date	20240528		

1524mm*914mm*30mm