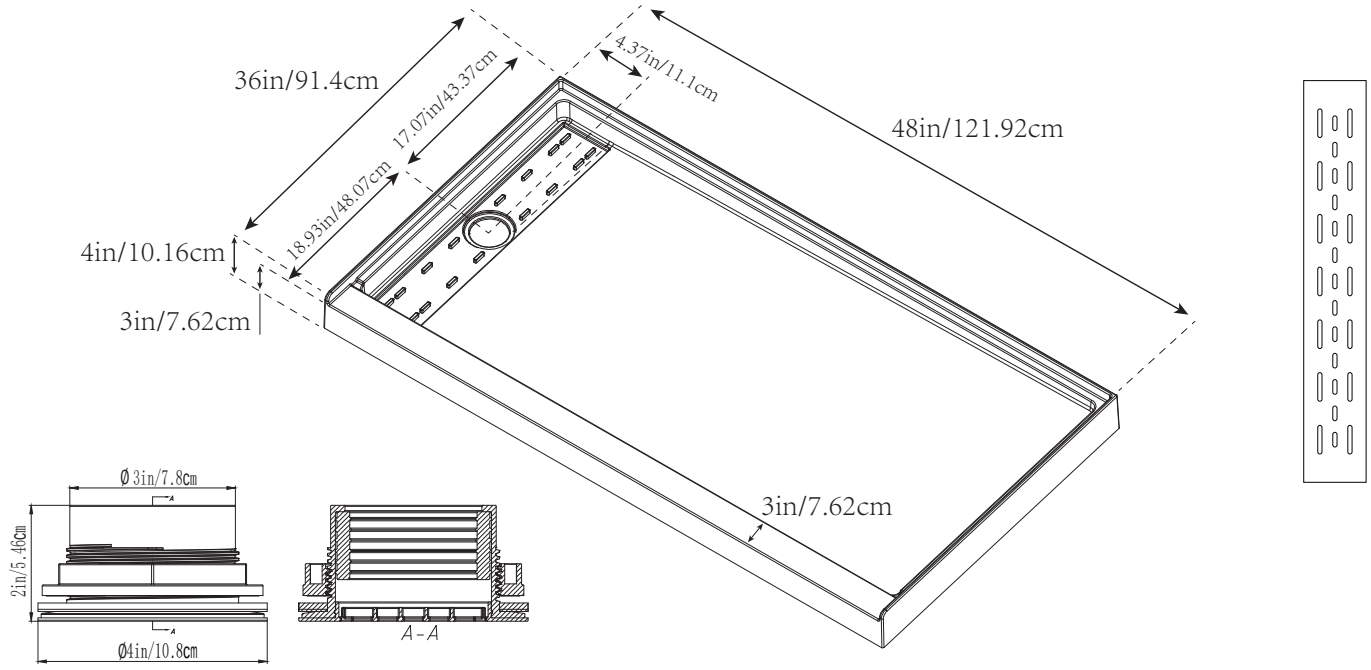

In this manual, the left-side drainage layout is used as an example for illustration.
For right-side layout, simply reverse the orientation shown in the figures.

INSTALLATION SPECIFICATION

Item#	BGL-SP4836C / MBL-SP4836C / BGR-SP4836C / MBR-SP4836C		
Base Color	White		
Base Dimension(LXWXH)	48X36X4 inches		
Base Material	SMC		
Drainer Material	ABS	Drain Cover	Golden/Black
Drainer Cover Material	SS304	Drain Hole Postion	Left/Right
Drain Hole Size	3.3in/8.5cm	N.W.	22.5kg/49.6 lb
Max. loading capacity	1000kg/2204.62lb	cert.	cUPC
Surface Finsh	Glossy	Shape	Rectangular
Number of Flanges	3 Sides	Drainer	Yes
Total Height	4 inches	Drainer Position	Left/Right