ASSEMBLY INSTRUCTION

Thank you for purchasing this quality product. Be sure to check all packing material carefully for small parts which may have come loose inside the carton during shipment. Identify and count all parts and metal hardware. Compare with the parts list to be sure all parts are present. If any part(s) are missing or damaged,please contact your local furniture dealer. For the efficient and speedy service,please indicate the model number and code letter of part(s) needed.

Do not fully tighten screws until fully assembled

	COMPONENT PARTS	
DESCRIPTION	PART NAME	Q'TY (PCS)
1	SIDEBOARD	1

HARDWARES REQUIRED

- A L Bracket - 2 PCS
- B Long Screw - 1 PC
- C Short Screw - 1 PC
- D Cable Tie - 1 PC
- E Phillips Screw Driver (Not provided)

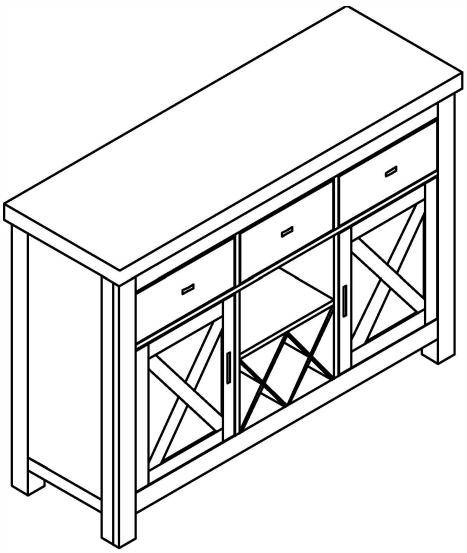

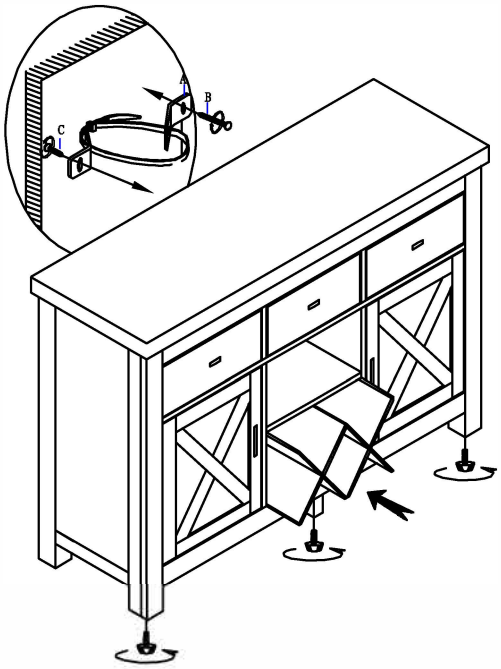

Attention:

***Some number parts listed on the instruction sheet may not be in parts bag as they may already assembled. Carefully check parts and packing materials prior to ordering replacements.