ASSEMBLY INSTRUCTION

A 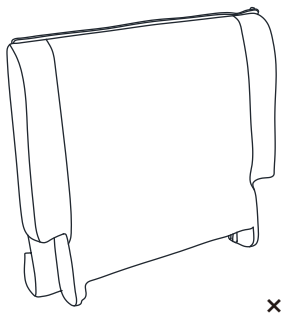 ×1	B 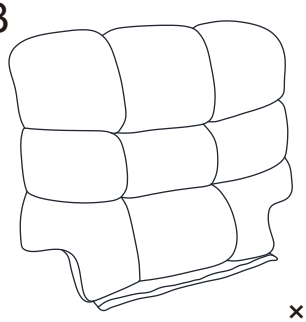 ×1	C 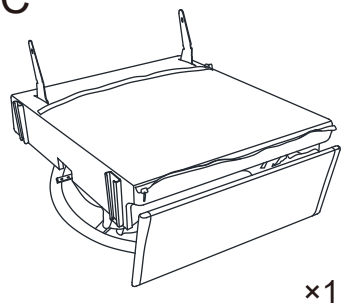 ×1	D 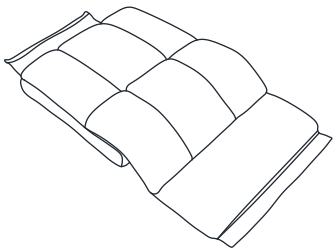 ×1
E 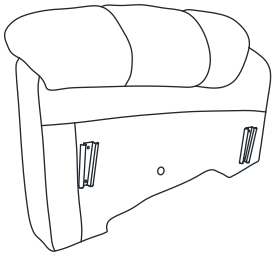 ×1	F 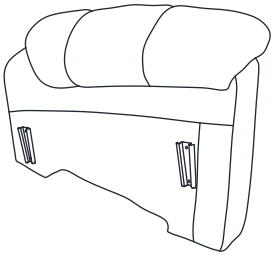 ×1	G 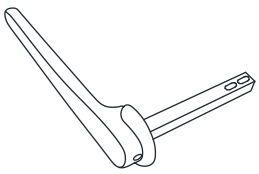 ×1	
① 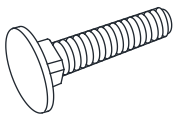 M6*25mm ×2	②  M6 ×2	③ 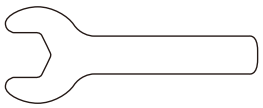 M11 ×1	

STEP 1

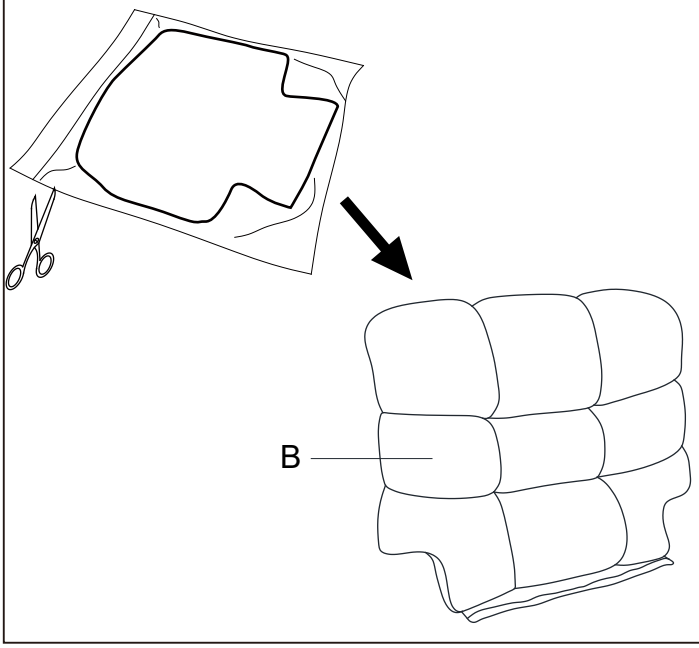

STEP 2

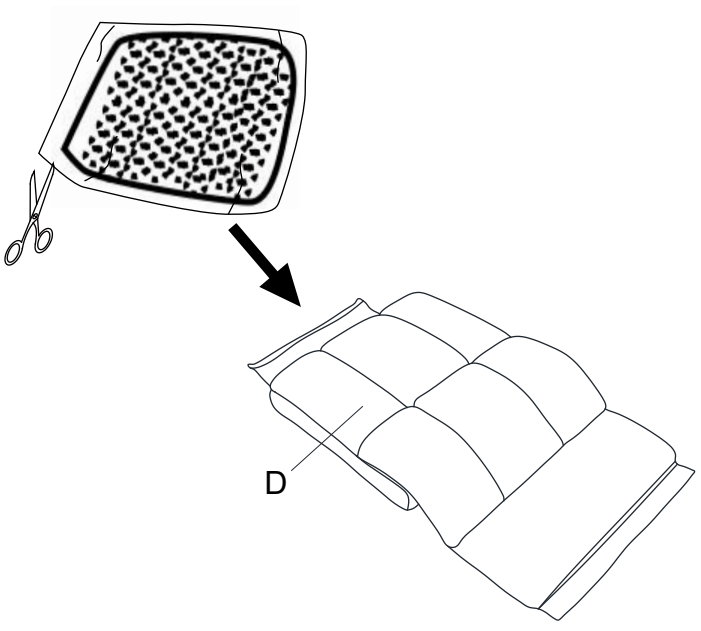

STEP 3

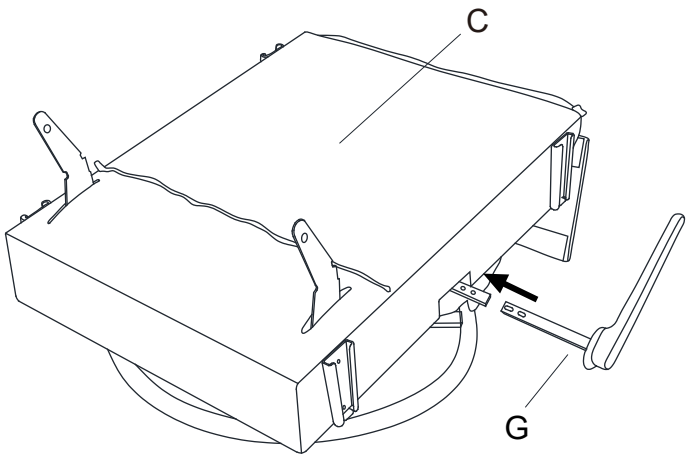

STEP 4

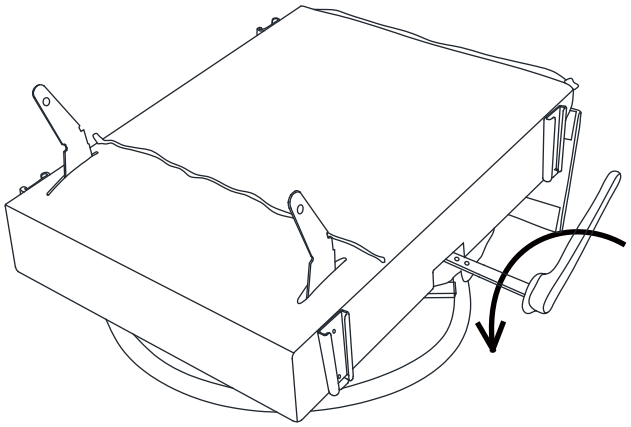

STEP 5

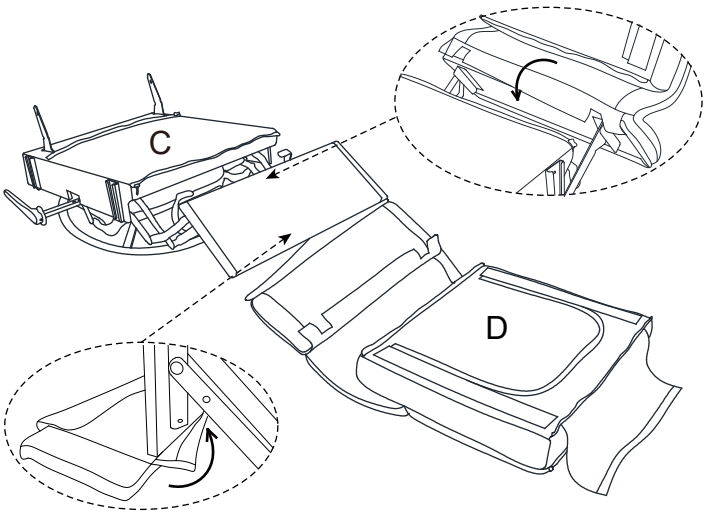

STEP 6

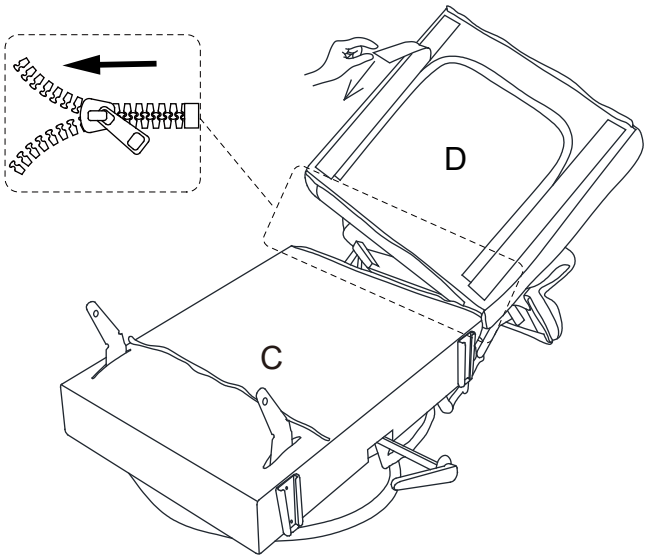

STEP 7

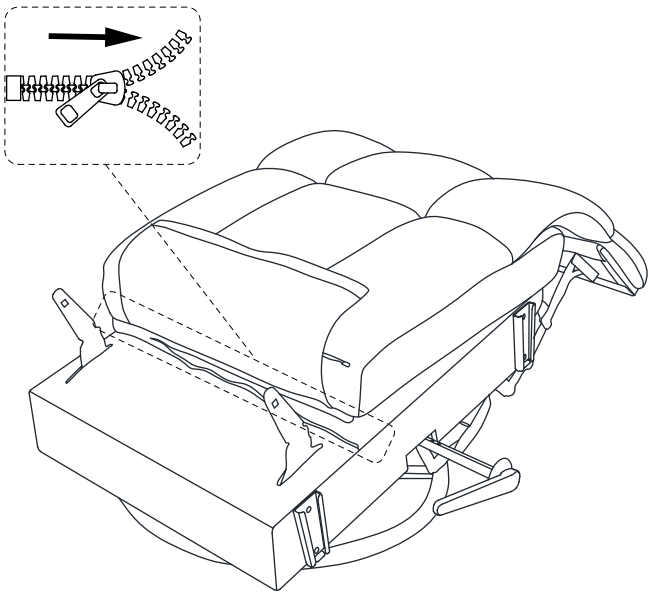

STEP 8

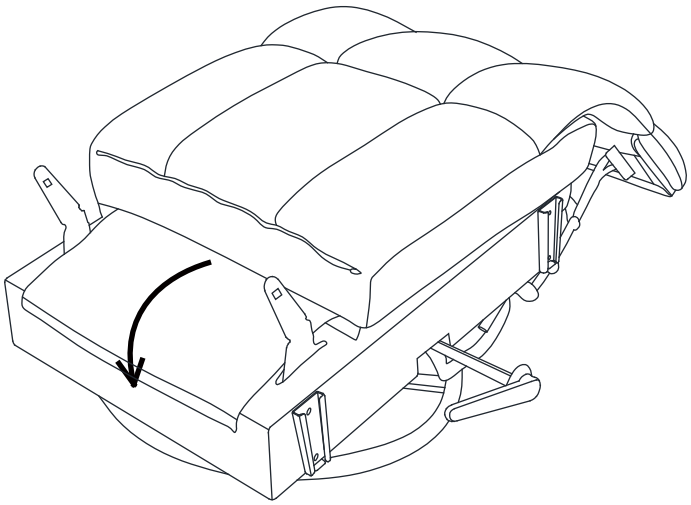

STEP 9

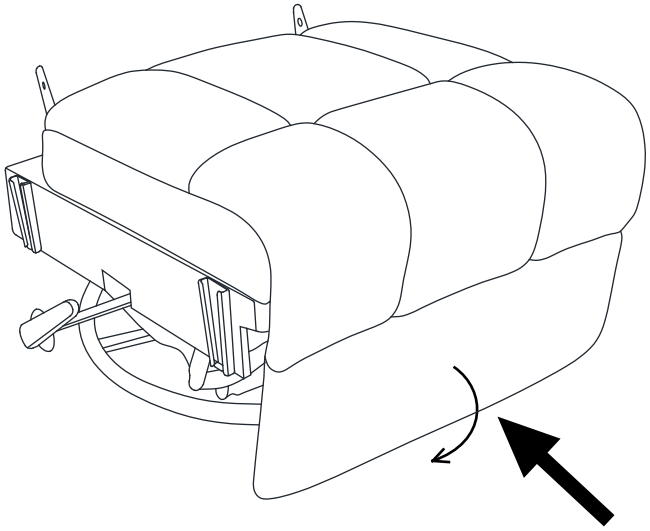

STEP 10

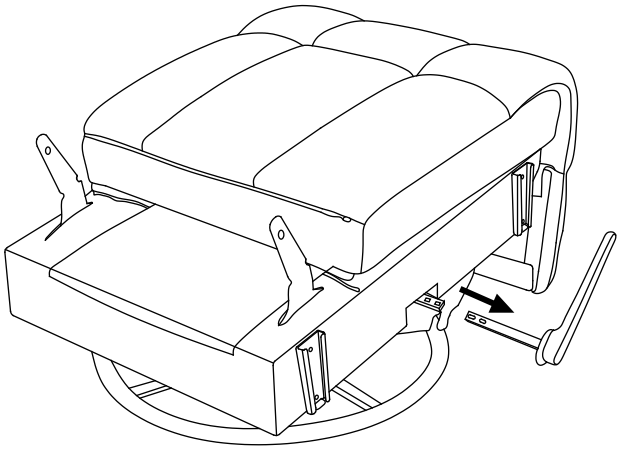

STEP 11

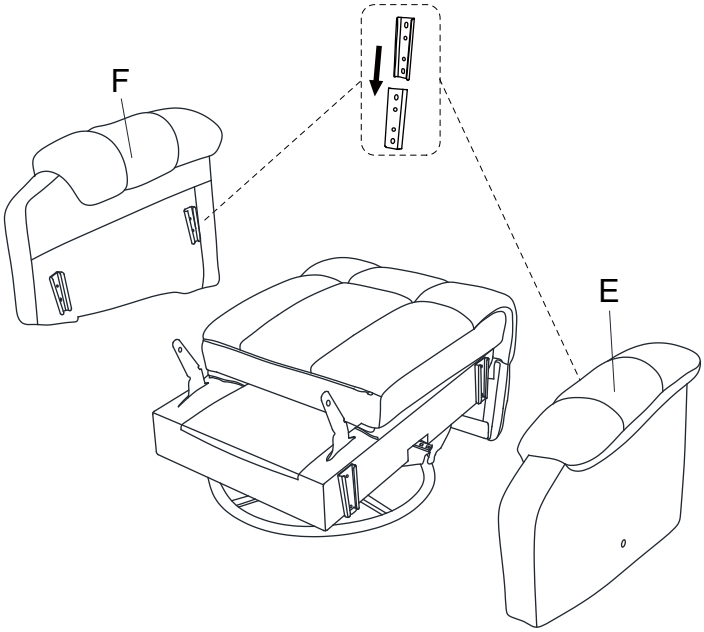

STEP 12

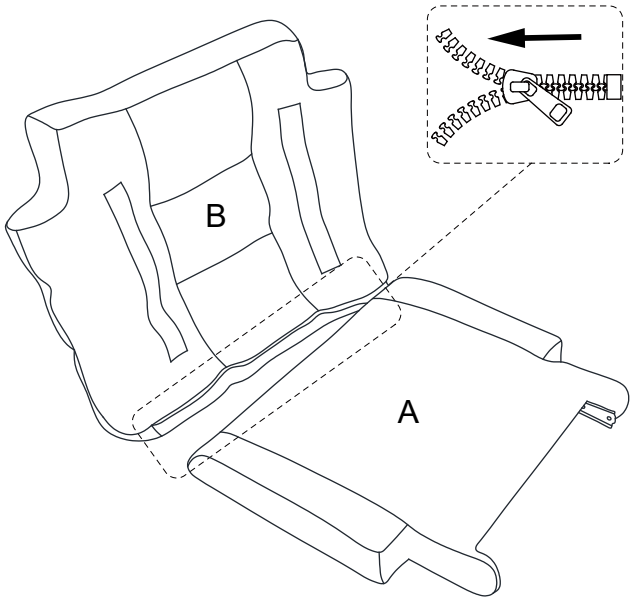

STEP 13

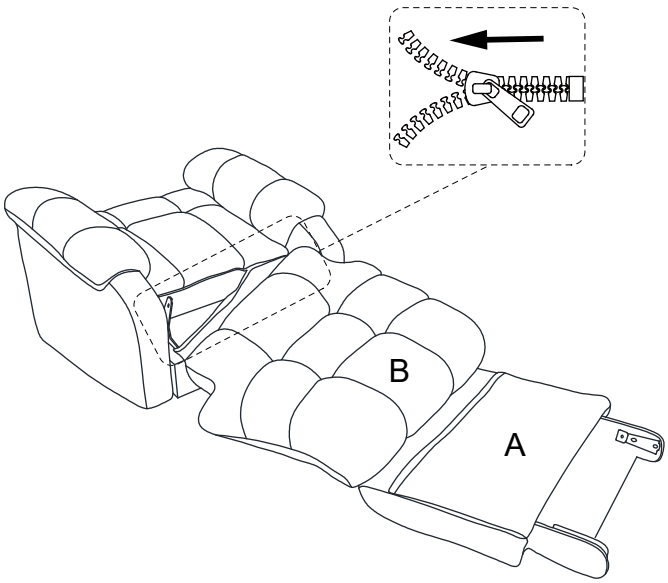

STEP 14

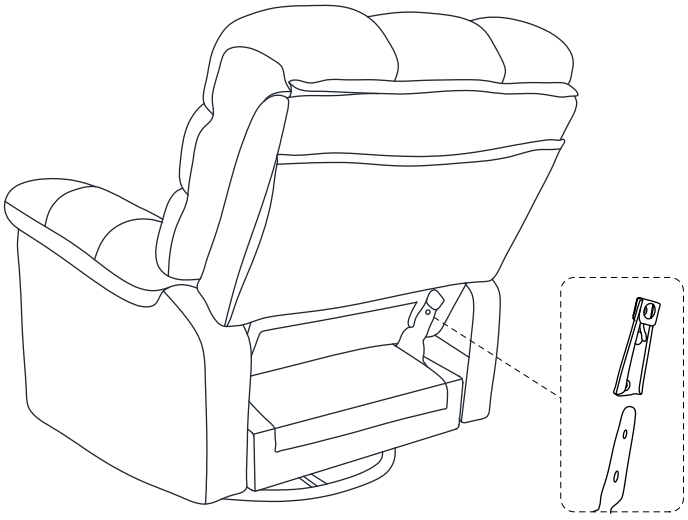

STEP 15

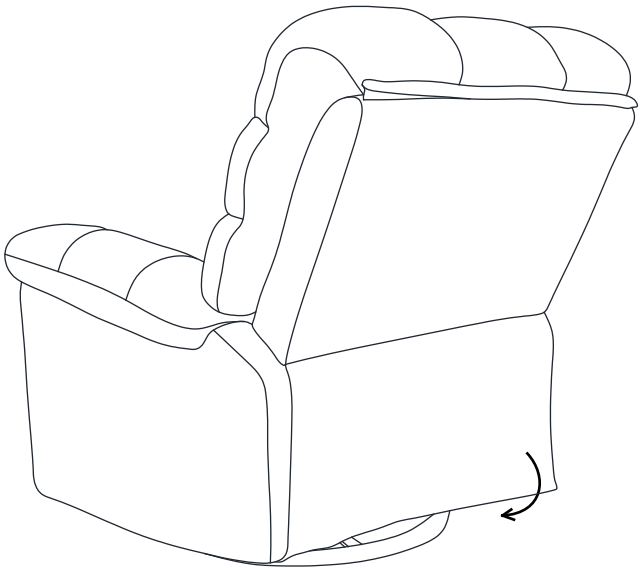

STEP 16

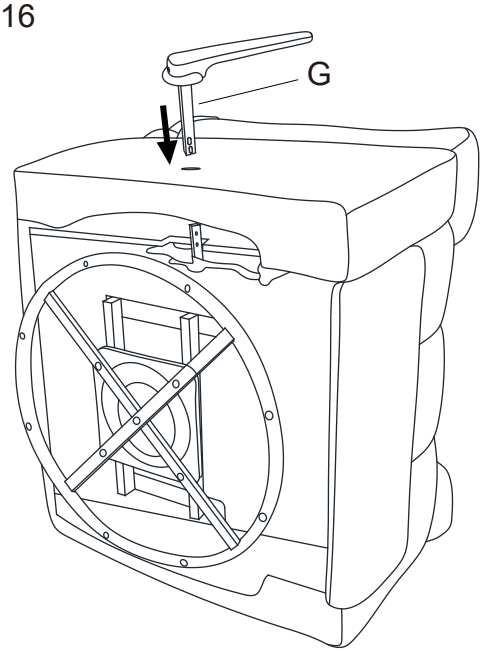

STEP 17

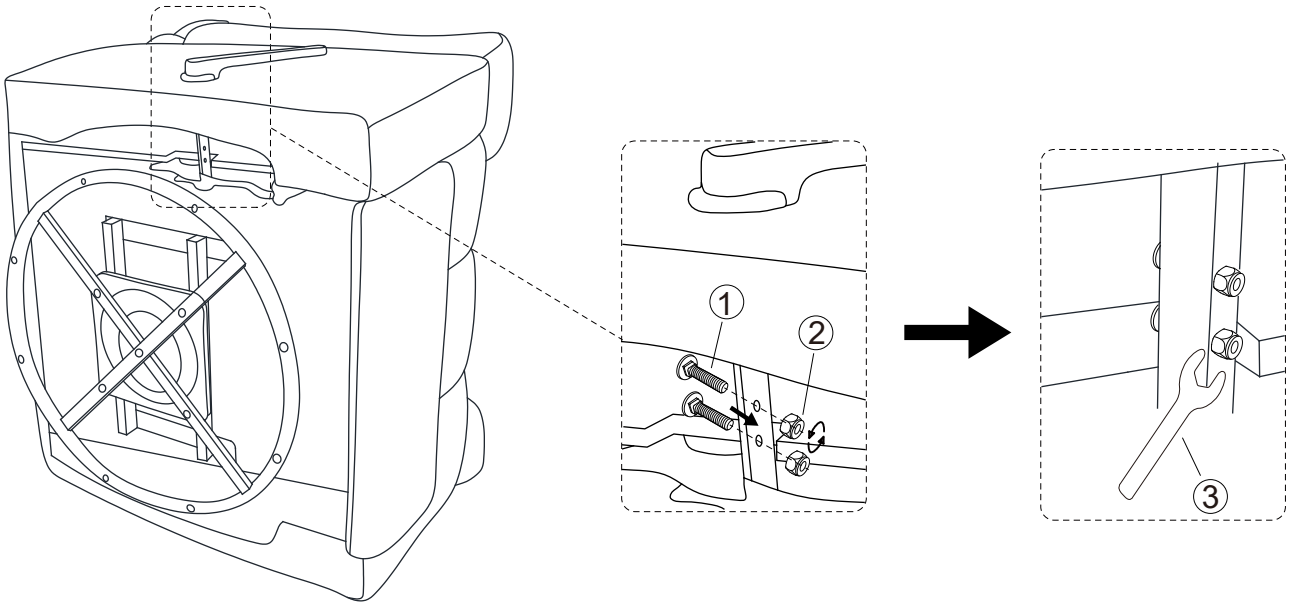

STEP 18

