INSTALLATION
Product Manual

Version: 460139US-01-26A-MGJ

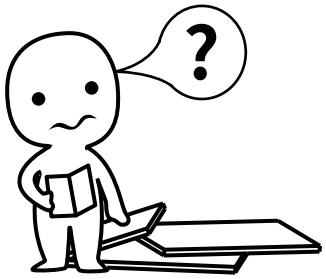

IMPORTANT INFORMATION!

please read the entire manual before starting to assemble and/or using this product.follow the manual thoroughly and keep it for further reference.

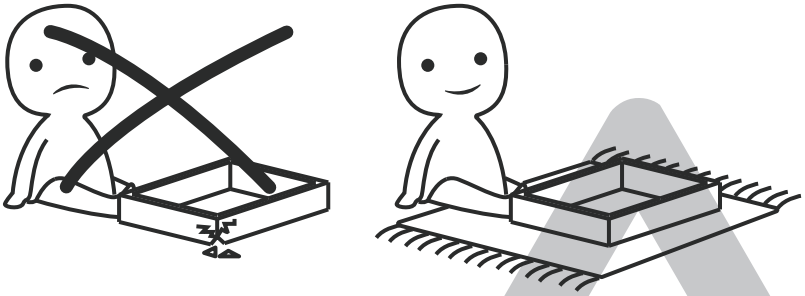

AVOID SCRATCHES!

In order to avoid scratching this furnuture should be assembled on a soft layer-could be a rug.

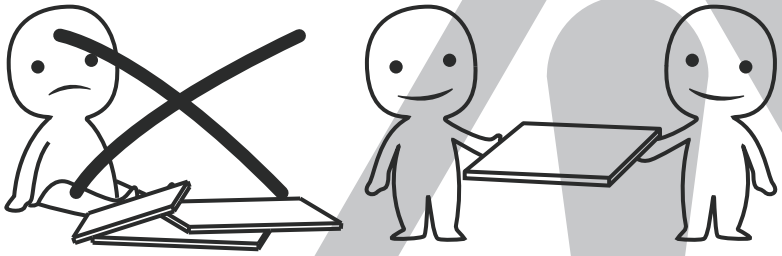

IMPROVE EFFICIENCY !

Try to find a partner to install with you, which can speed up the installation efficiency and shorten the time.

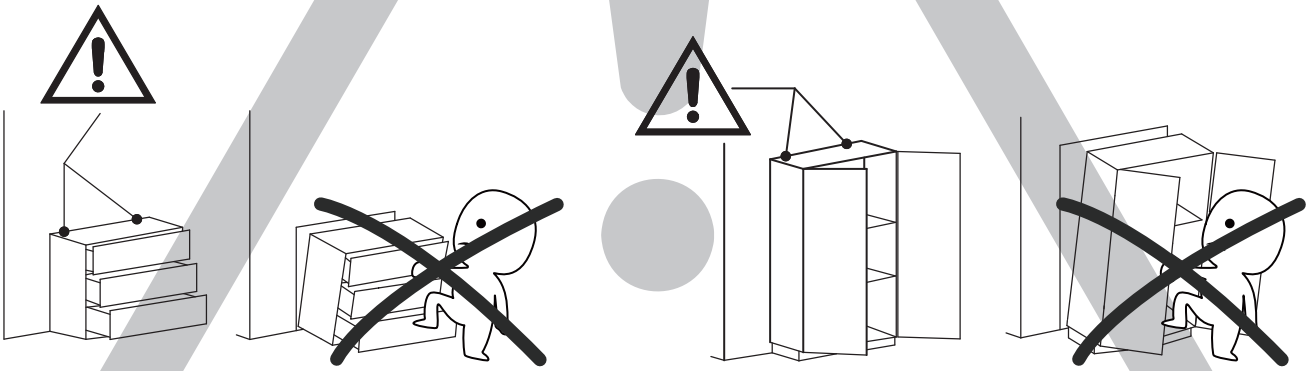

ANTI-TOPPLE WARNING !

Overturned furniture can cause serious or fatal crush injuries. To prevent tipping over, be sure to use the wall attachment, if not included with this product. Please purchase the wall attachment that fit your wall. If unsure, seek professional advice. Please read and follow each step of the instructions carefully.

IMPORTANT !

It is important that any product which is assembled using any kind of screw is re-tightened 2 weeks after assembly,and once every 3 months - in order to assure stability through-out the lifespan of the product.

For regular maintenance and cleaning of the product, for the frame, please use a rag dipped in neutral detergent to fully wipe it, and then dry it with a clean rag.For glass materials, wipe with a rag dampened with water glass cleaner, and then dry with a dry rag.

Do not use an electric screwdriver, and do not use too much force when installing, because the board is easy to break.

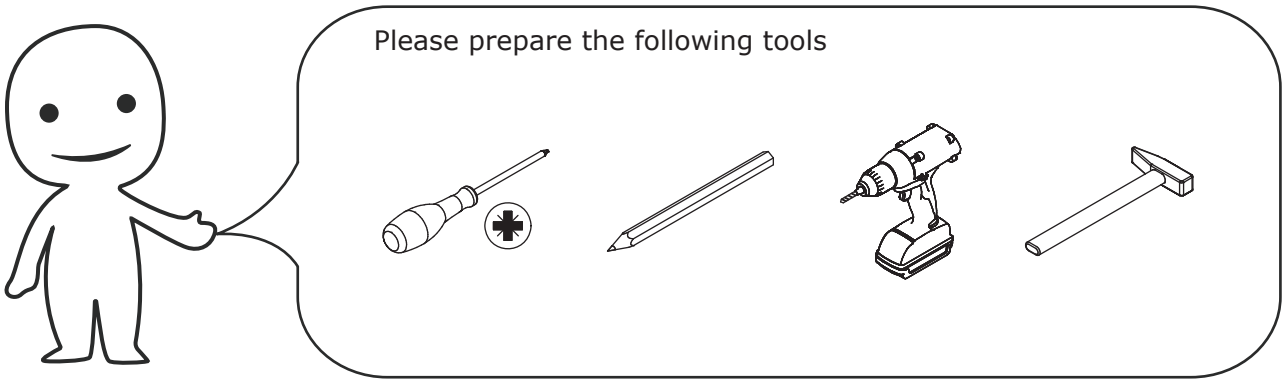

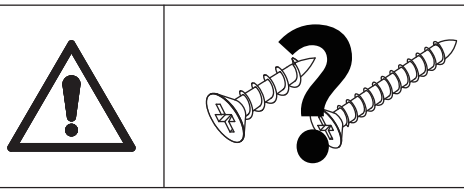

When installing, please carefully confirm whether each screw corresponds to the manual, accessories with similar shapes can be distinguished by size

A x 32	B x 10	C x 66	D x 3
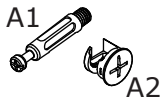 ∅8 x 40 mm ∅15 x 11 mm	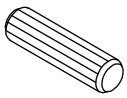 ∅8 x 40 mm	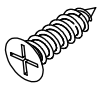 ∅3.5 x 14 mm	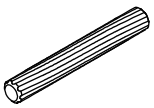 ∅8 x 60 mm

E x 6	F x 6	G x 12	H x 30
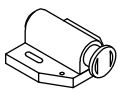	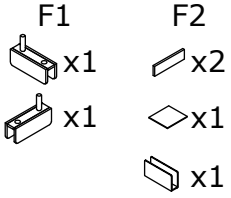	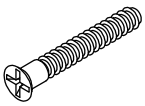 ∅7 x 50 mm	

I x 20	J x 1	K x 1	L x 22
		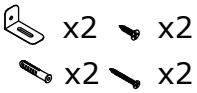	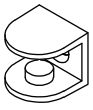

x 1	back board strip1 x 1	back board strip2 x 1
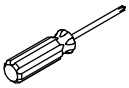	 770 mm	 374 mm

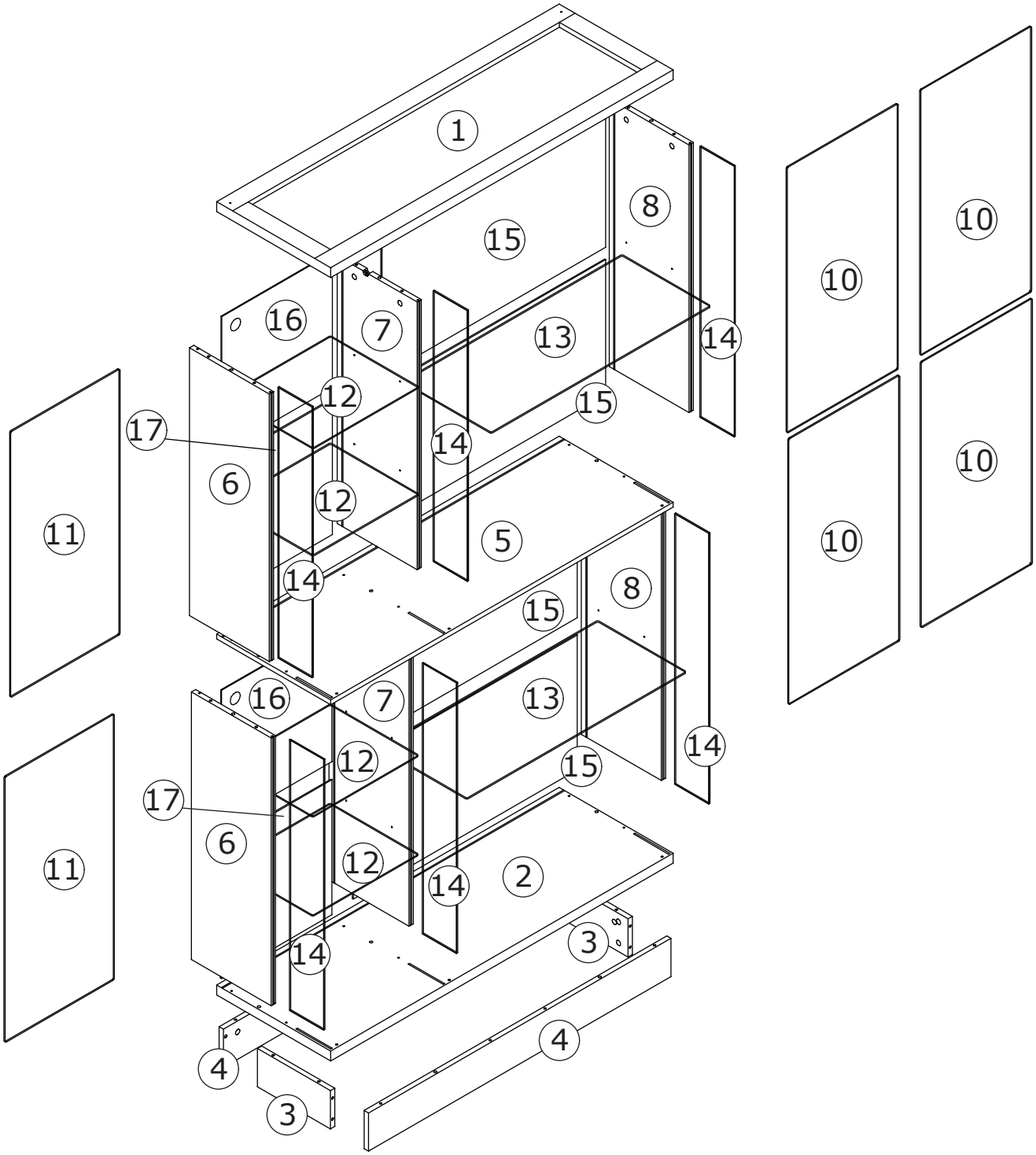

⚠WARNING





Children have died from furniture tipover.To reduce the risk of furniture tipover:

- ALWAYS install Anti-tip device provided.
- NEVER put a TV on this product.
- NEVER allow children to stand,climb or hang on drawers,doors,or shelves.
- NEVER open more than one drawer at a time.
- Place heaviest items in the lowest drawers.

This is a permanent label.
Do not remove!

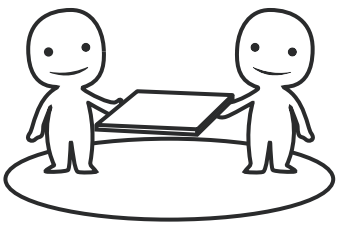

ASSEMBLED BY 2 ADULTS

1

A x 6	B x 3	C x 6	E x 3	
A1 ∅8 x 40 mm	∅8 x 40 mm	∅3.5 x 14 mm		

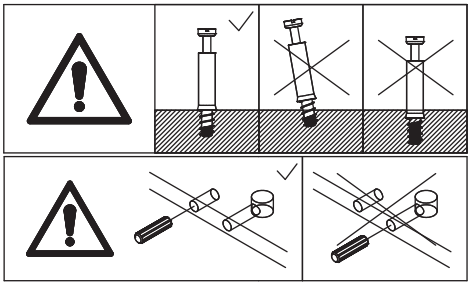

Screw eccentric rod (A1) and insert wooden dowel (B) to plate 1.
Secure push latch (E) to plate 1 using screw (C).

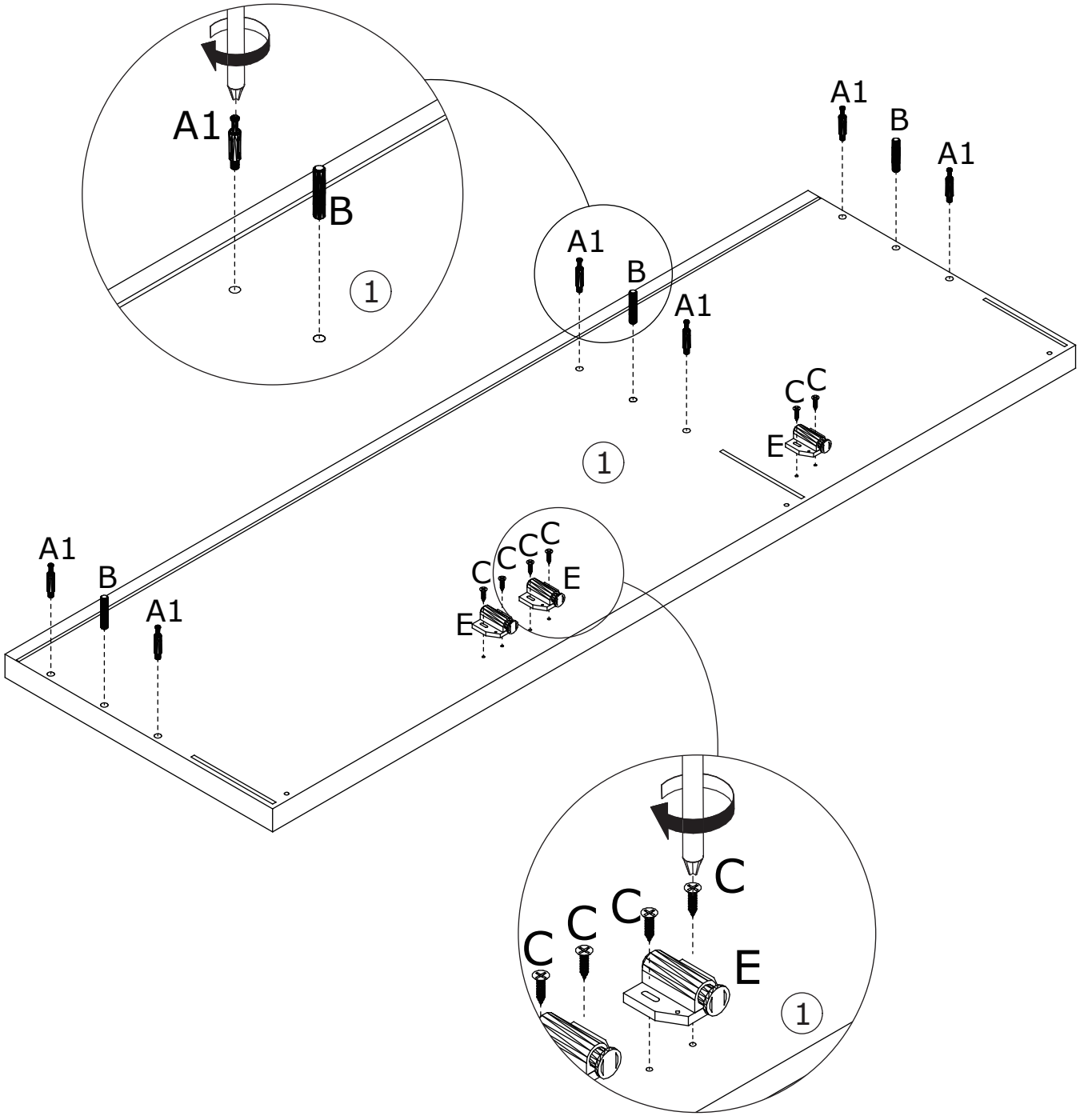

2

A x 6	C x 6	E x 3	
A1 ∅8 x 40 mm	∅3.5 x 14 mm		

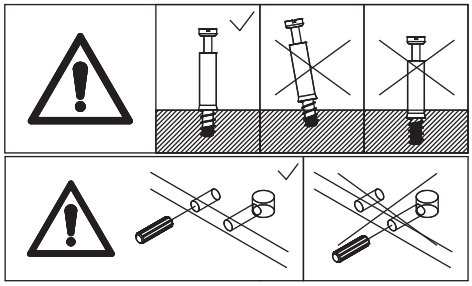

Screw eccentric rod (A1) onto plate 5.
Secure push latch (E) to plate 5 using screw (C).

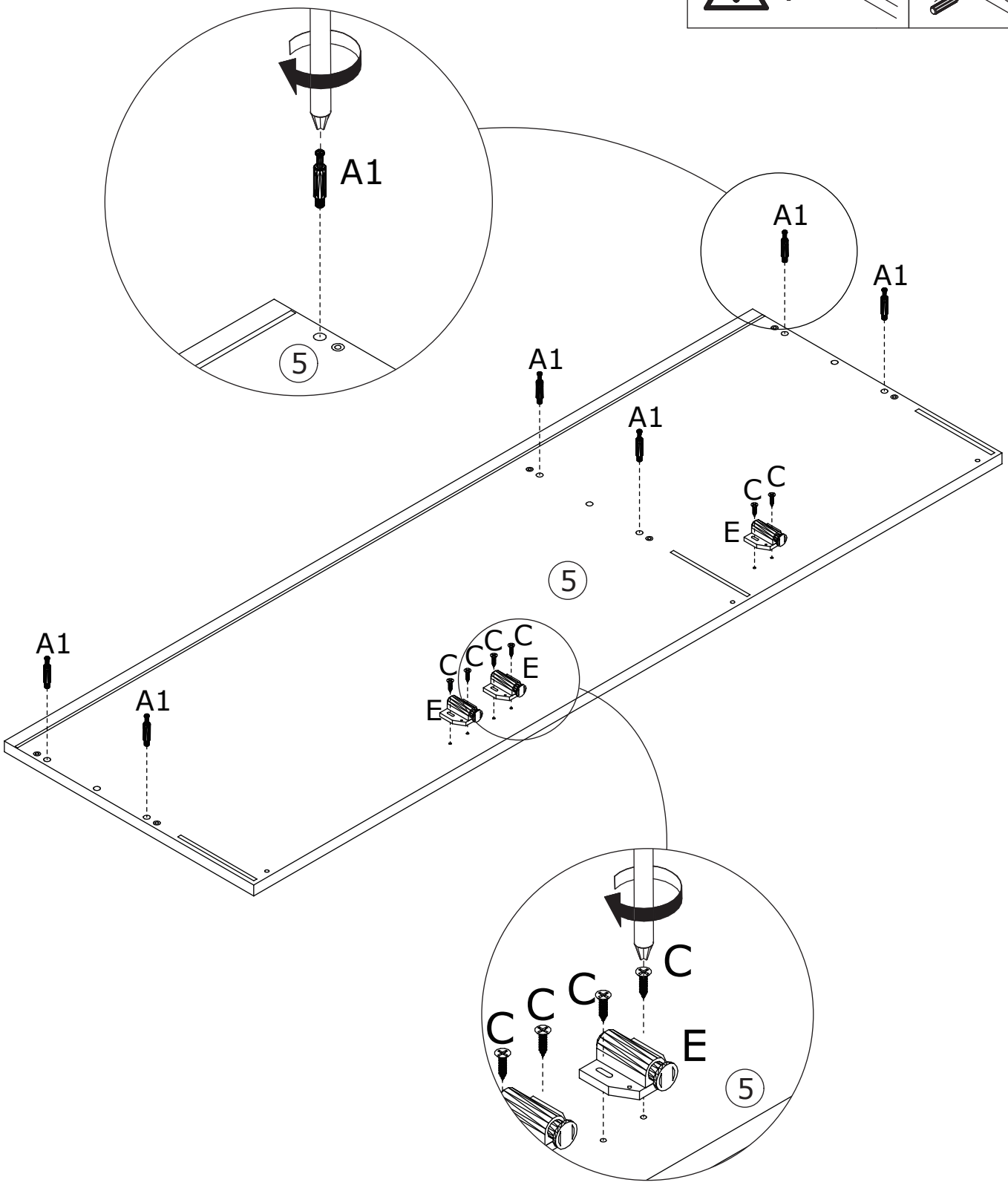

3

C x 12	L x 12	
 ∅3.5 x 14 mm		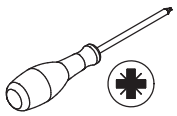

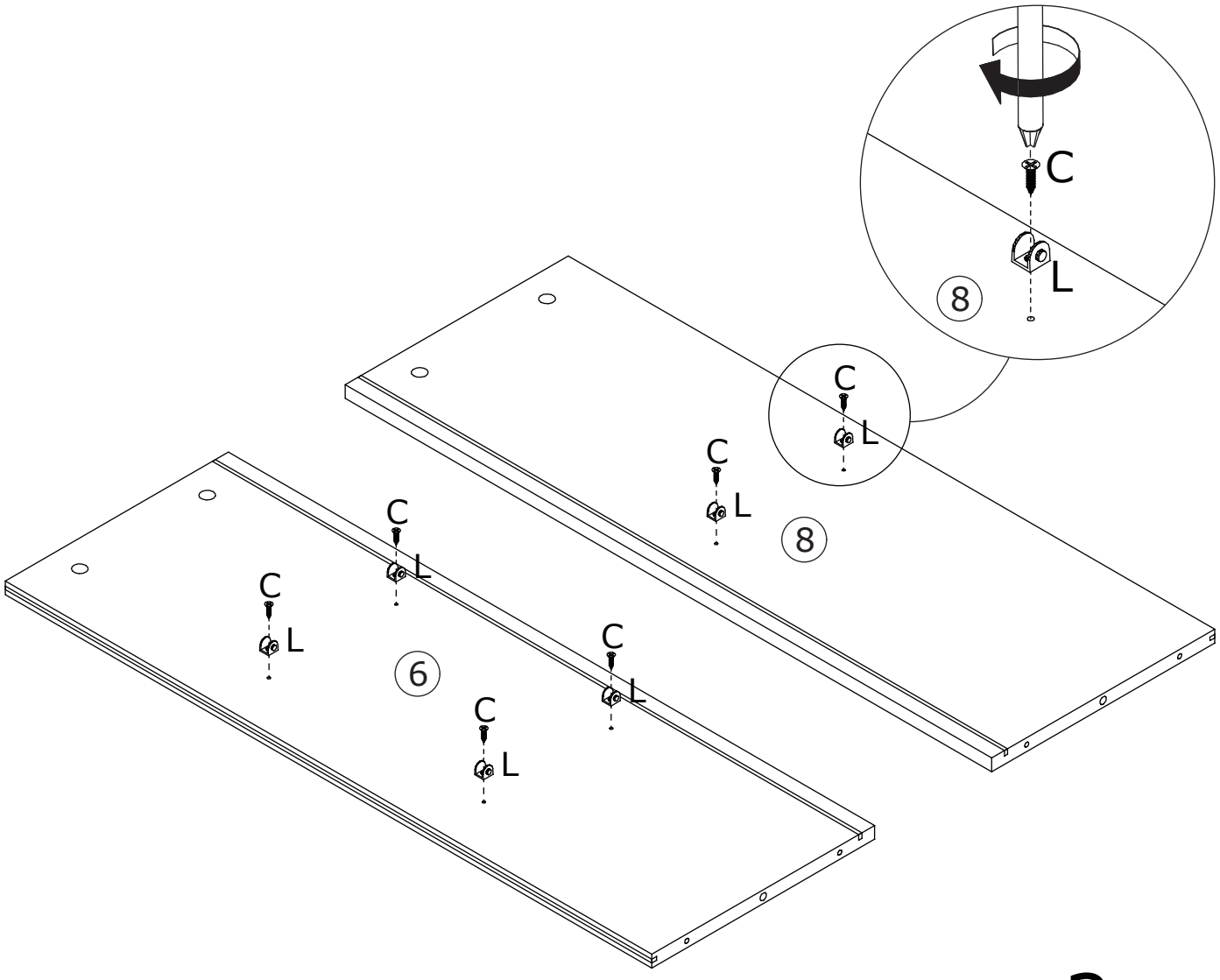

x2

Secure part (L) to plates 6 and 8 using screw (C).

4

C x 12	L x 12	
 ∅3.5 x 14 mm		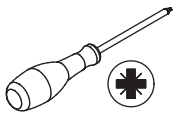

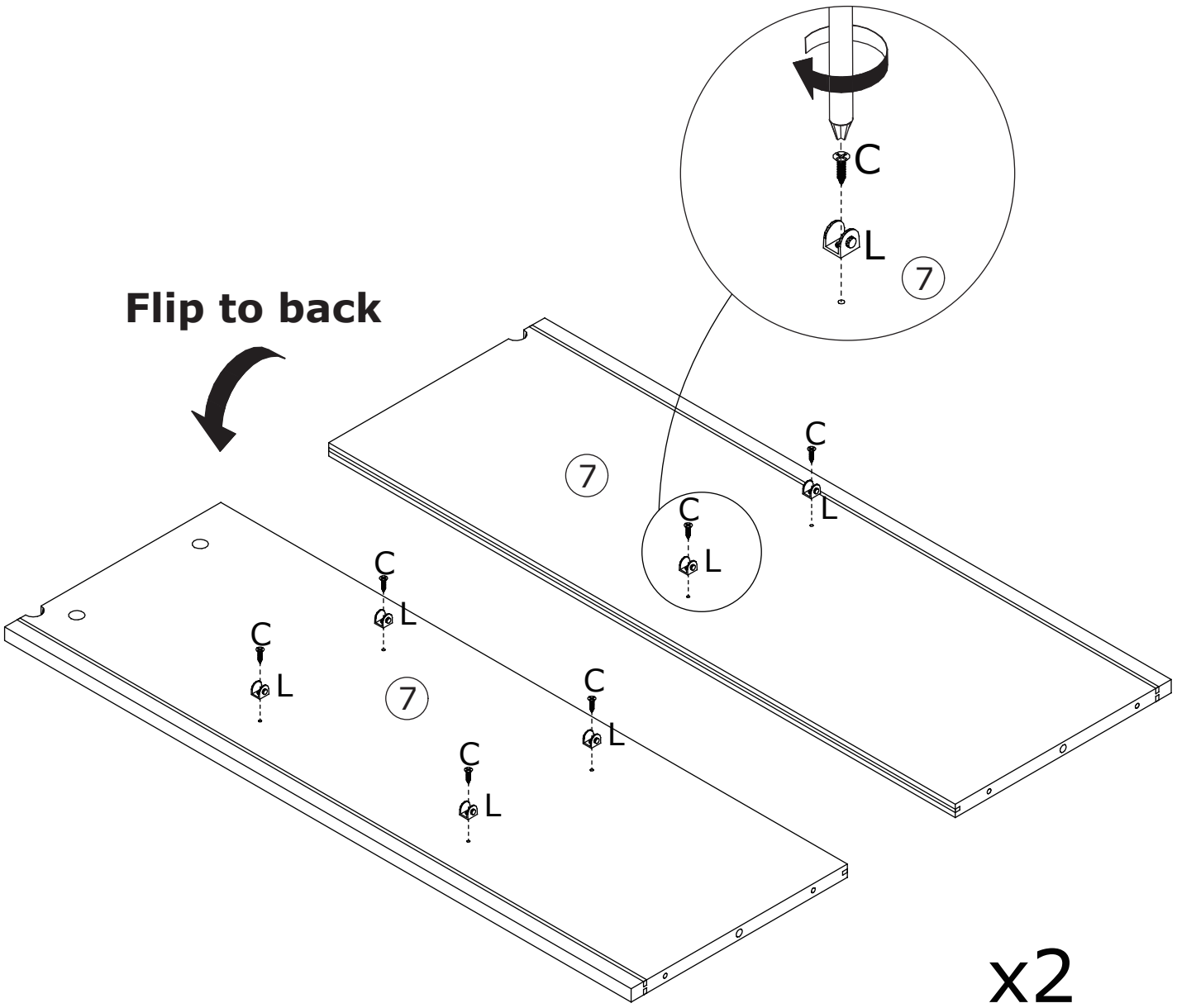

x2

Secure part (L) to **both sides of** plates 7 using screw (C).

5

A x 6

A2

∅15 x 11 mm

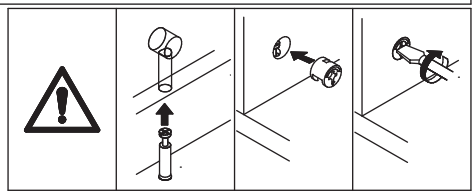

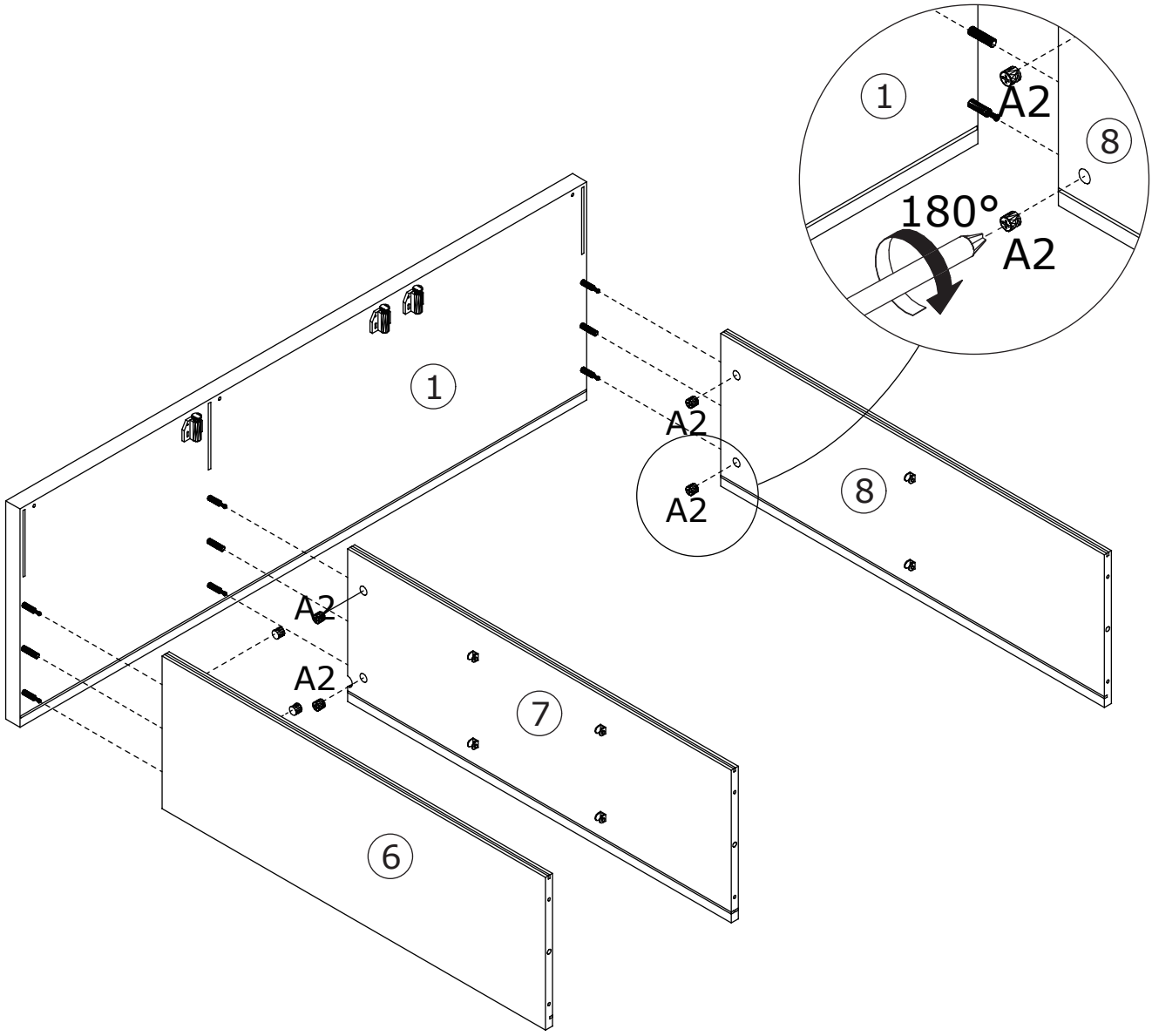

Connect plates 6, 7 and 8 to plate 1, then tighten by turning eccentric wheel (A2) clockwise.

6

back board strip1 x 1 770 mm	back board strip2 x 1 374 mm	

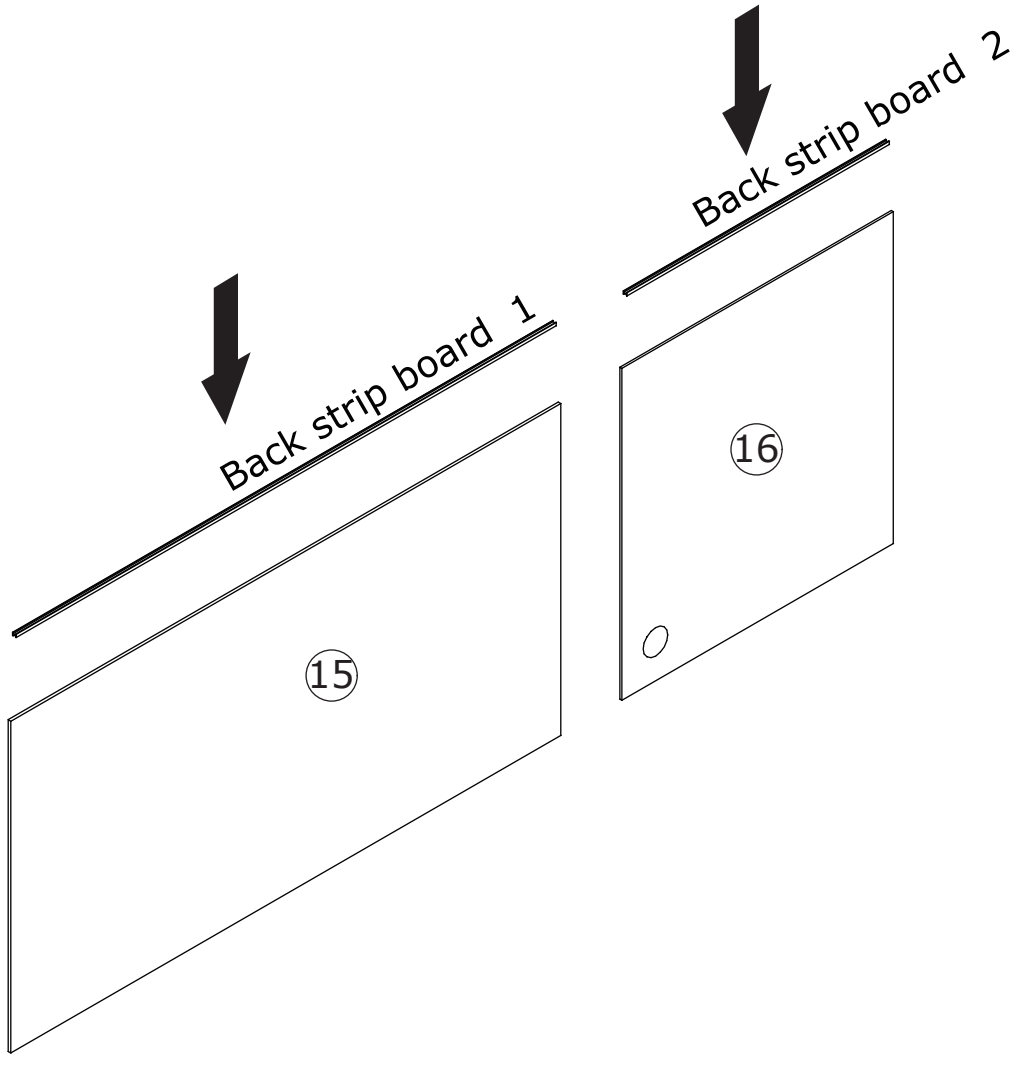

Install back strips 1 and 2 to plates 15 and 16.

7

Insert plates 15, 16, and 17 into the available slots.

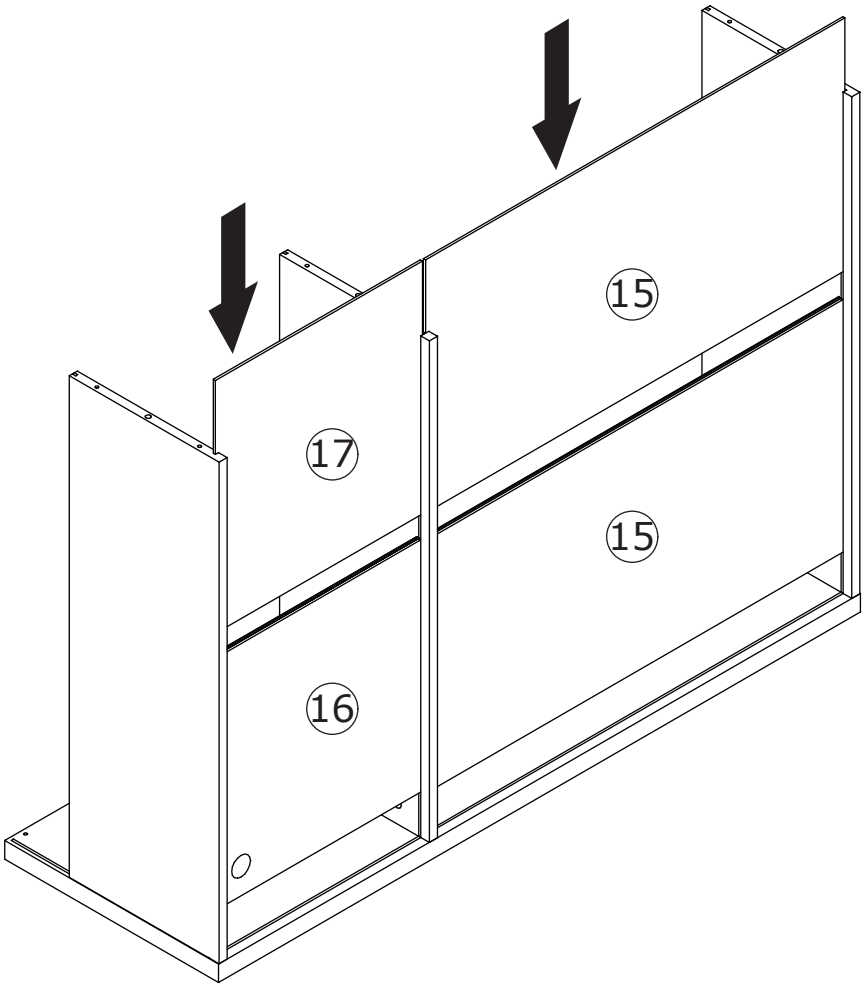

8

D x 3

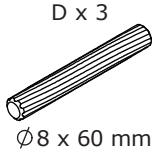

∅8 x 60 mm

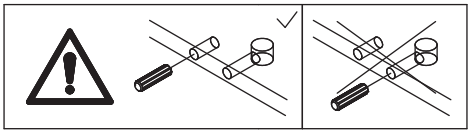

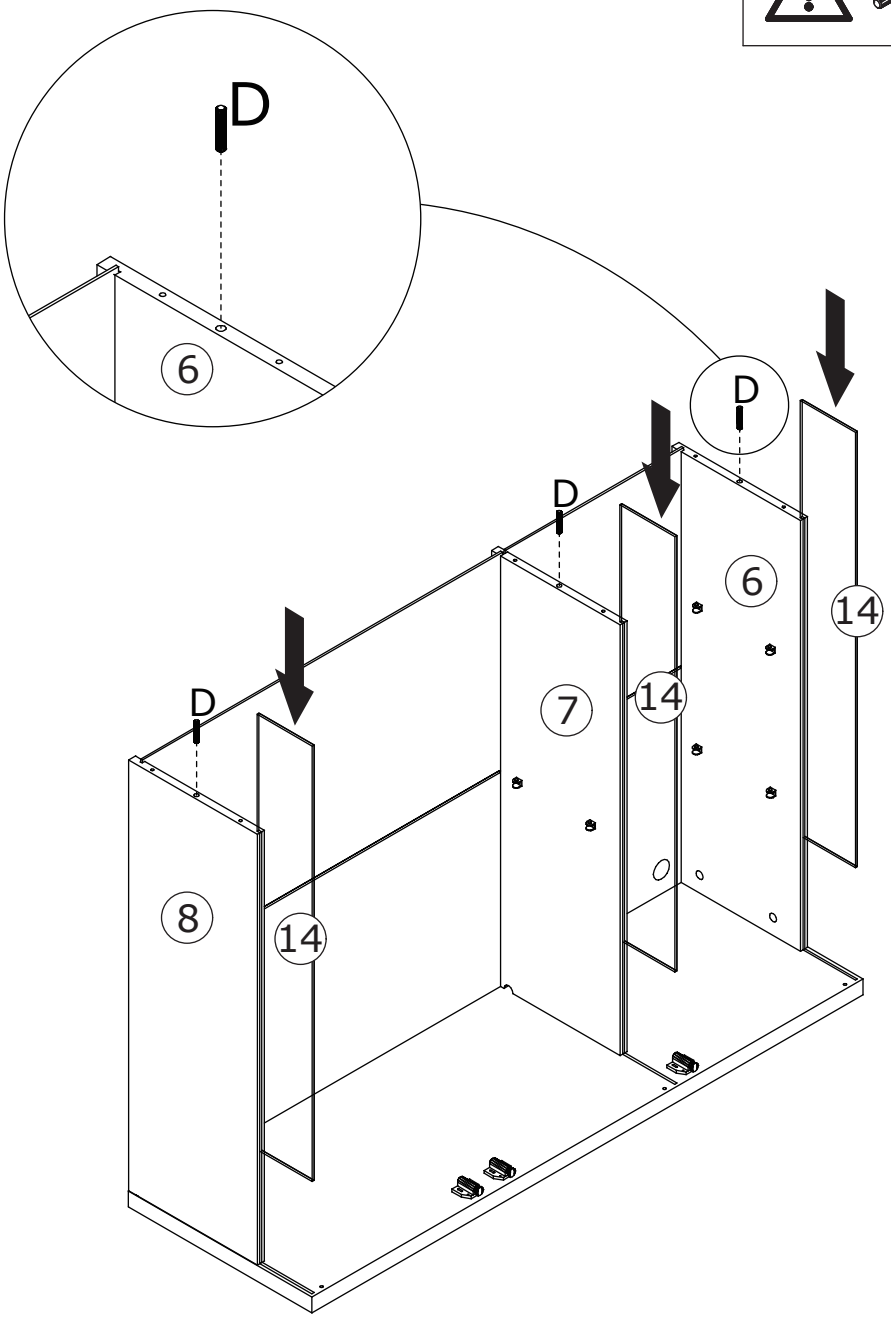

Insert glass plate 14 into the available slot.
Insert wooden dowel (D) into plates 6, 7 and 8.

9

G x 6

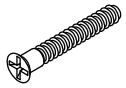

∅7 x 50 mm

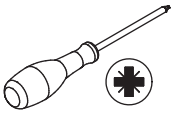

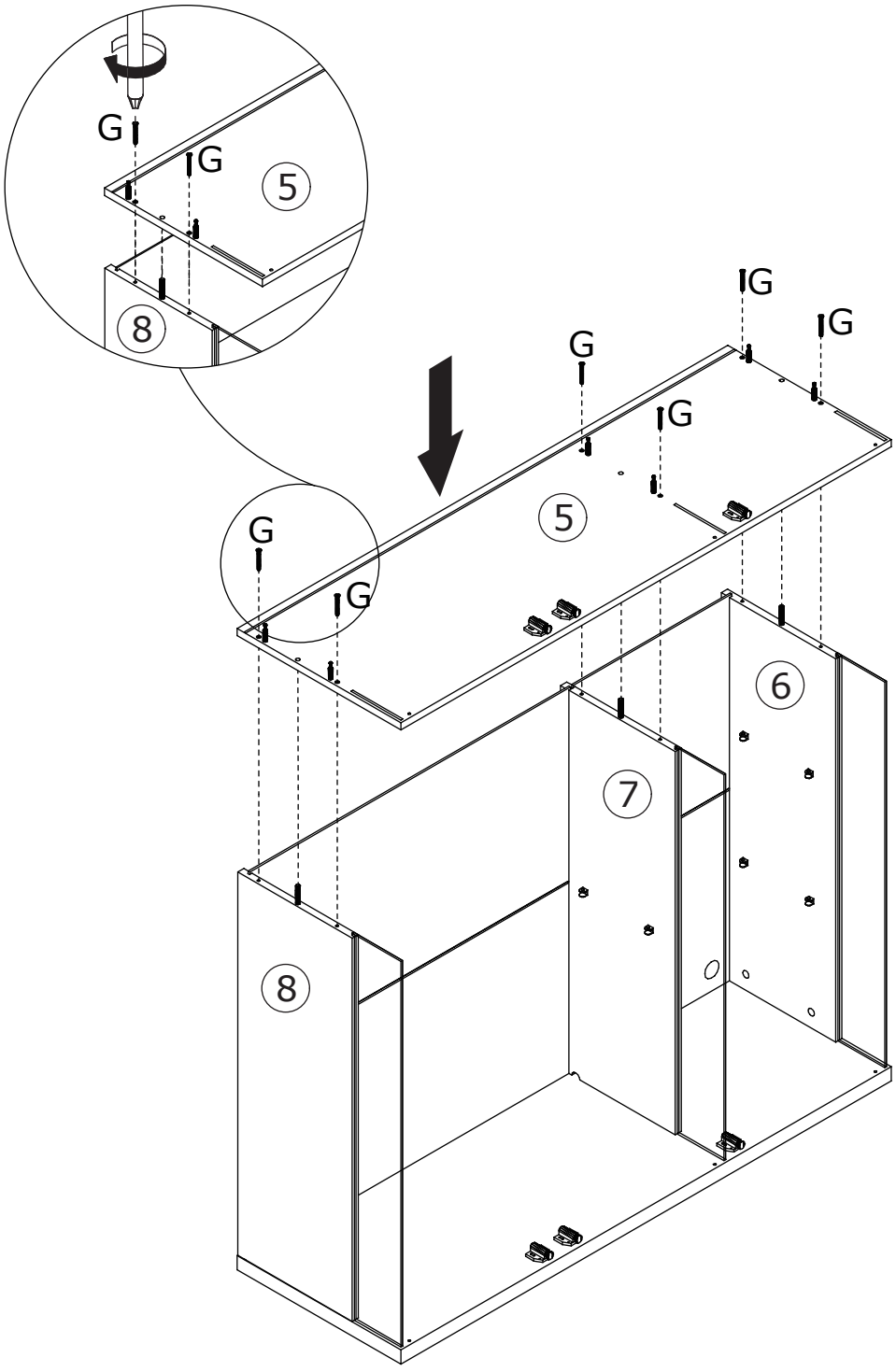

Connect plate 5 to plates 6, 7 and 8, and secure them with screw (G).

10

A x 6

A2

∅15 x 11 mm



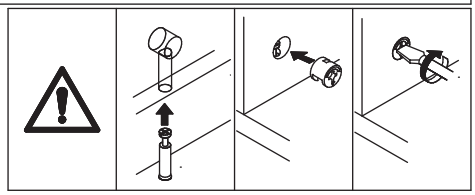

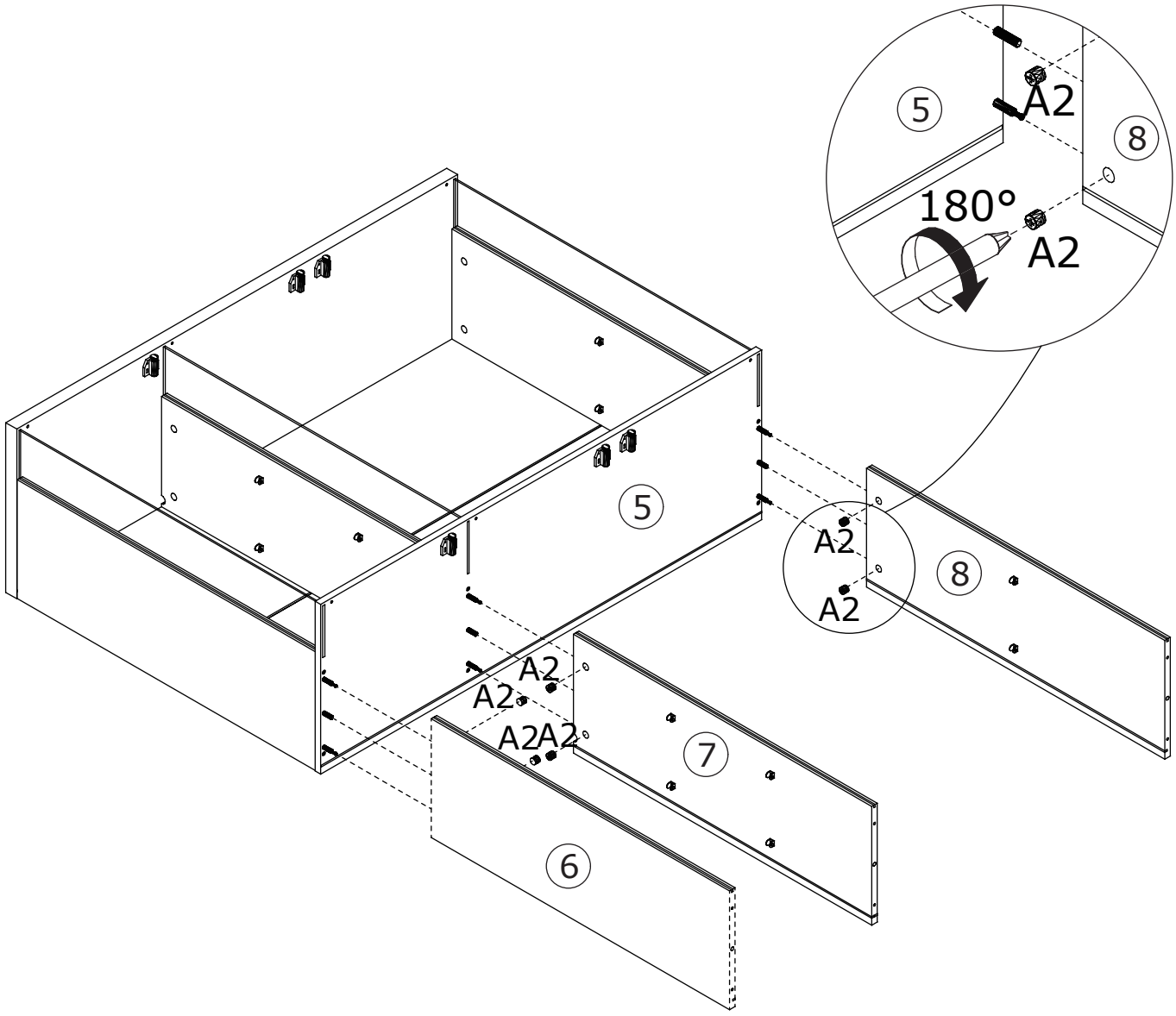

Connect plates 6, 7 and 8 to plate 5, then tighten by turning eccentric wheel (A2) clockwise.

11

B x 3	back board strip1 x 1	back board strip2 x 1	
∅8 x 40 mm	770 mm	374 mm	

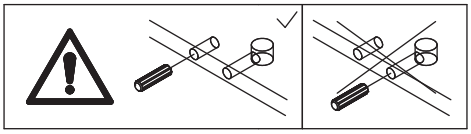

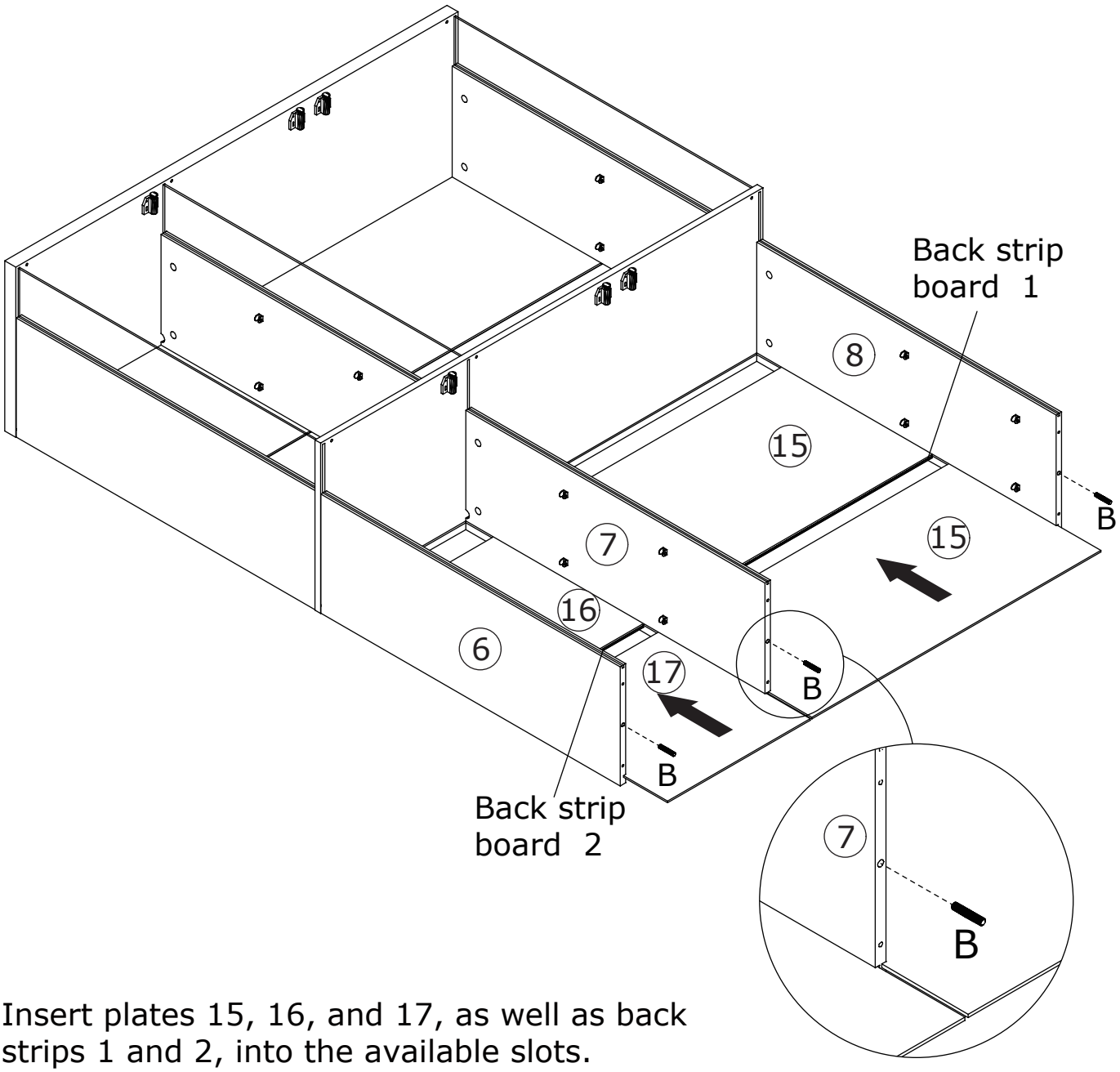

Insert plates 15, 16, and 17, as well as back strips 1 and 2, into the available slots.

Insert wooden dowel (B) into plates 6, 7, and 8.

12

Insert glass plate 14 into the available slots.

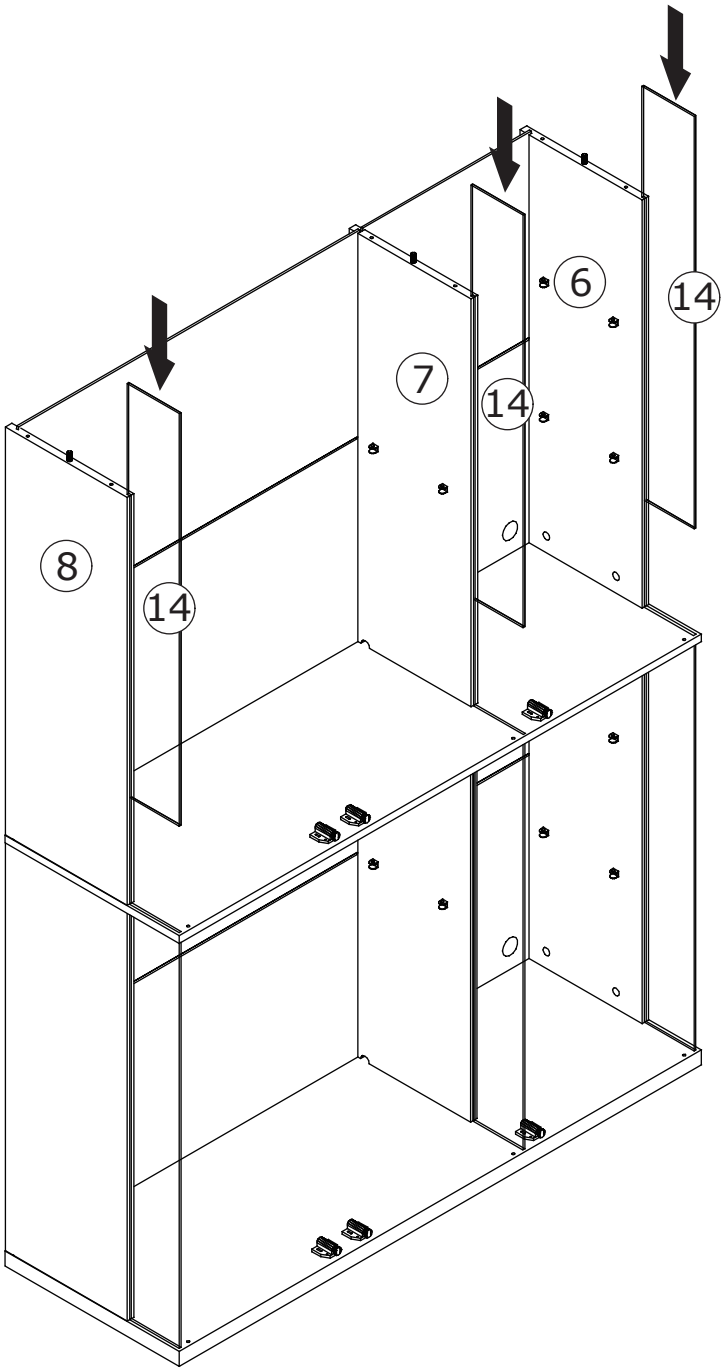

13

A x 8

A1



∅8 x 40 mm

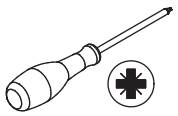

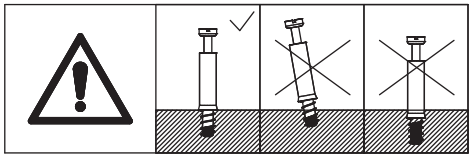

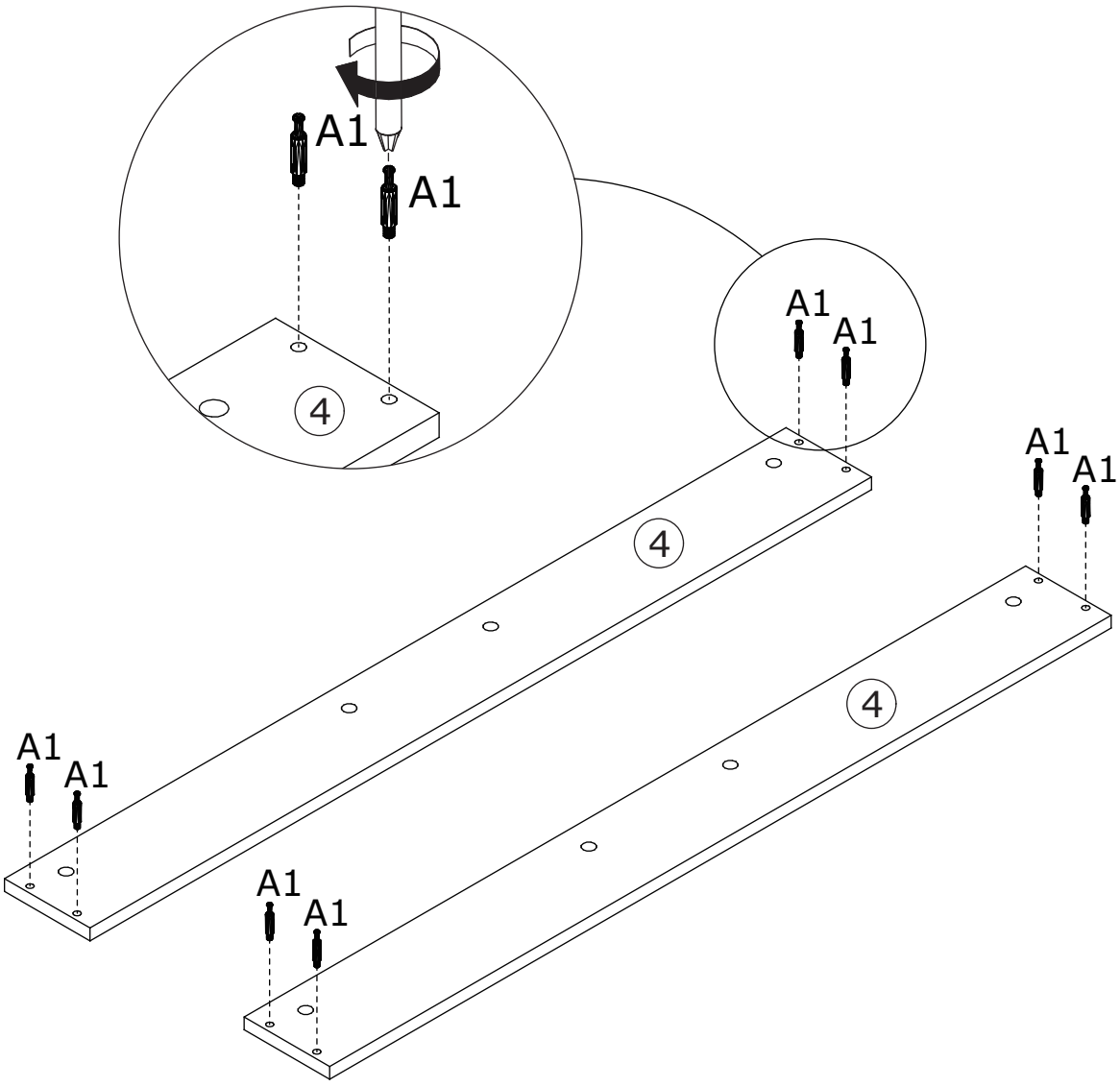

Screw eccentric rod (A1) onto plate 4.

14

A x 4

A2

∅15 x 11 mm

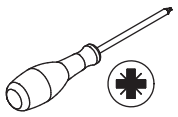

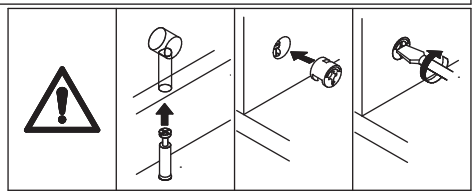

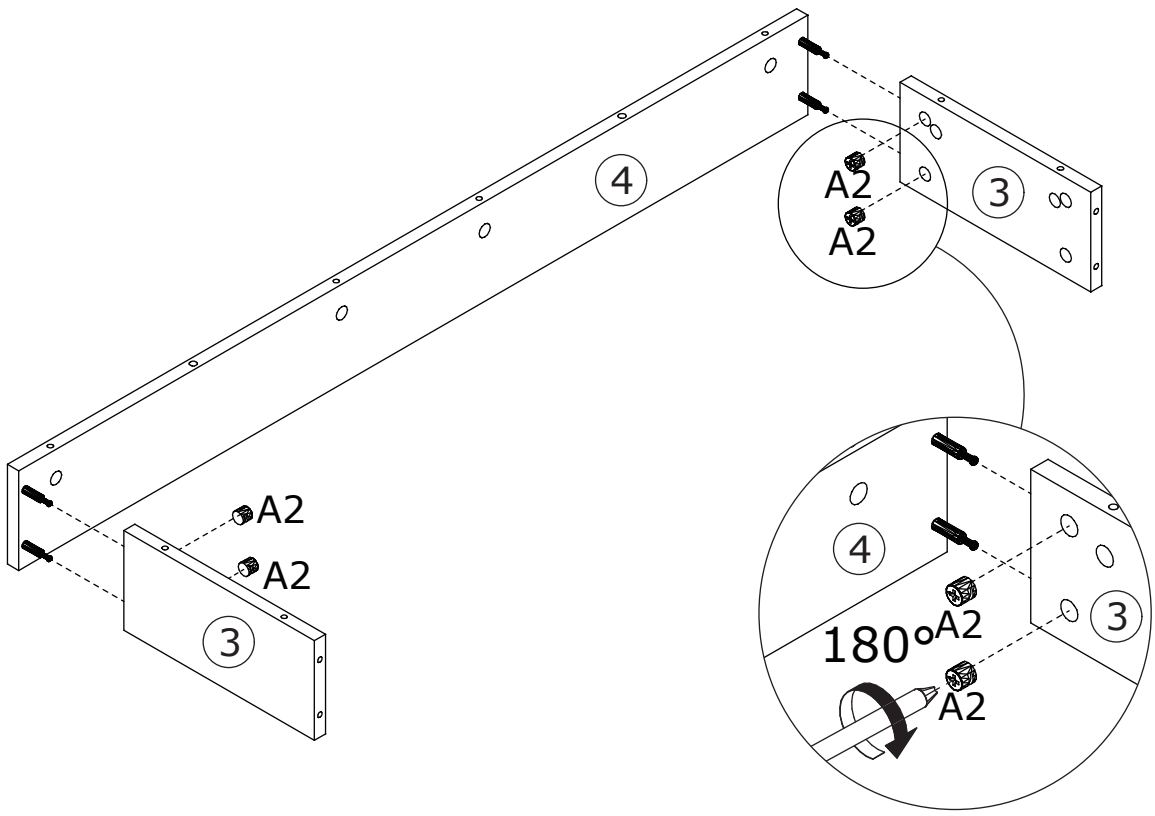

Connect plate 4 to plate 3, then tighten by turning eccentric wheel (A2) clockwise.

15

A x 4

A2

∅15 x 11 mm

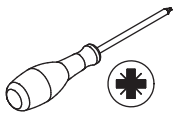

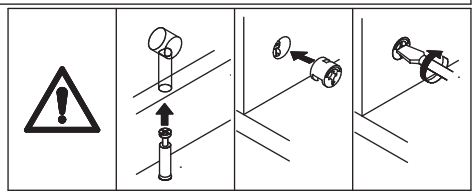

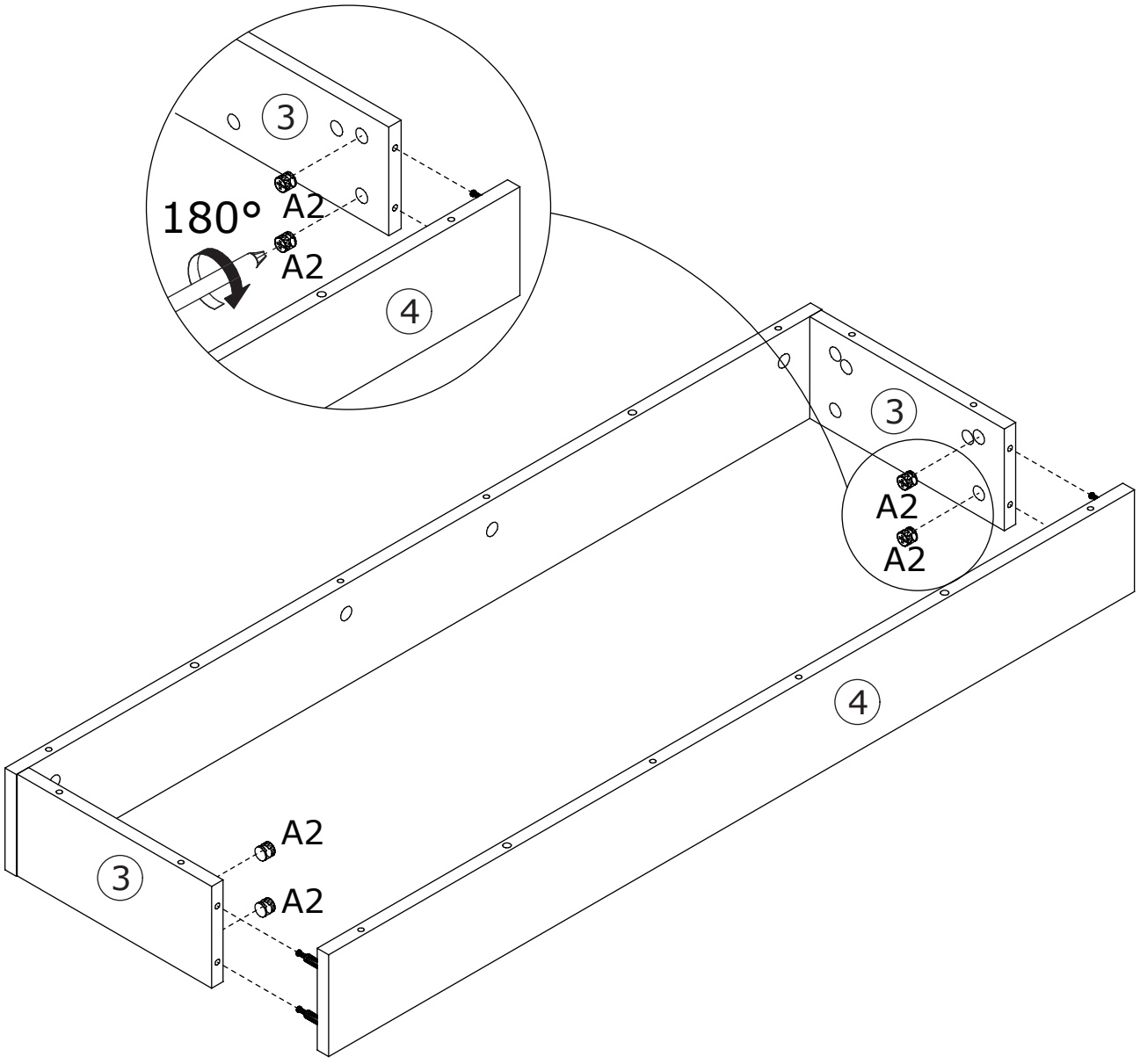

Connect plate 4 to plate 3, then tighten by turning eccentric wheel (A2) clockwise.

16

A x 12

A1

∅8 x 40 mm

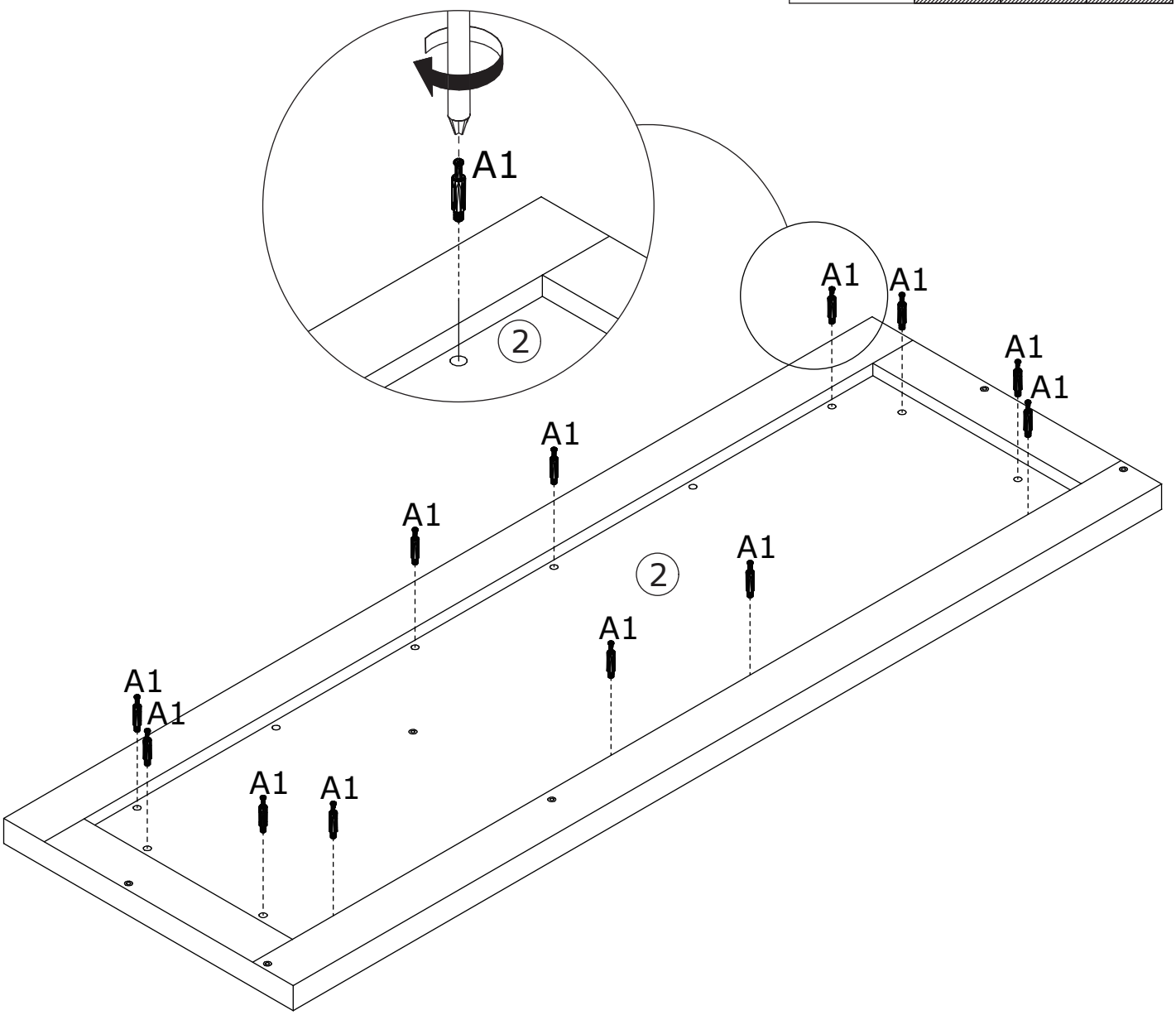

Screw eccentric rod (A1) onto plate 2.

17

B x 4

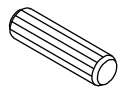

∅8 x 40 mm

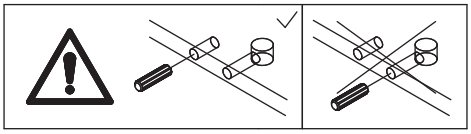

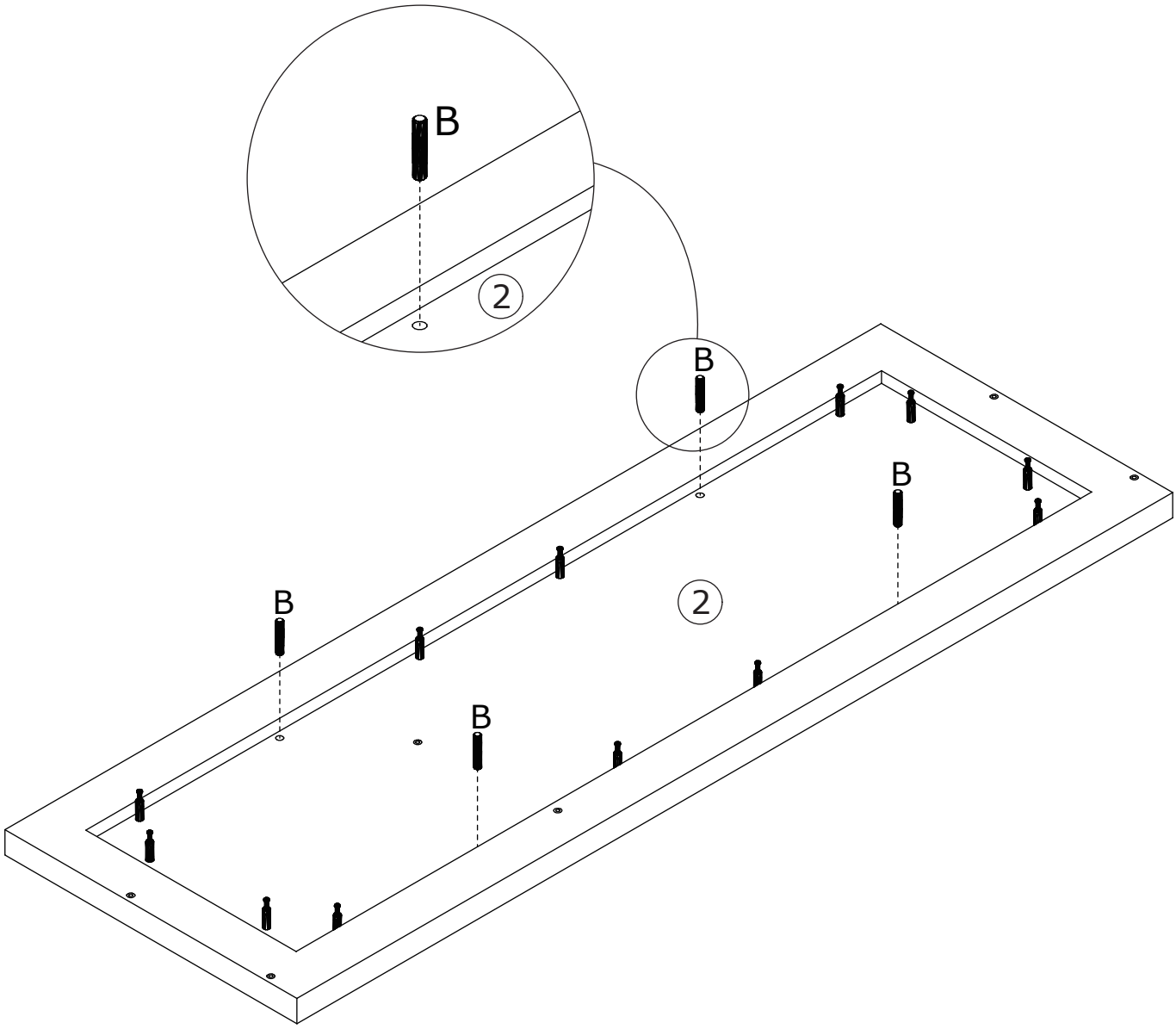

Insert wooden dowel (B) into plate 2.

18

A x 12

A2

∅15 x 11 mm

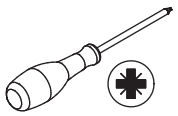

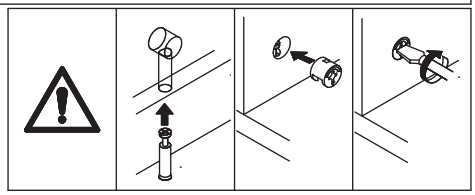

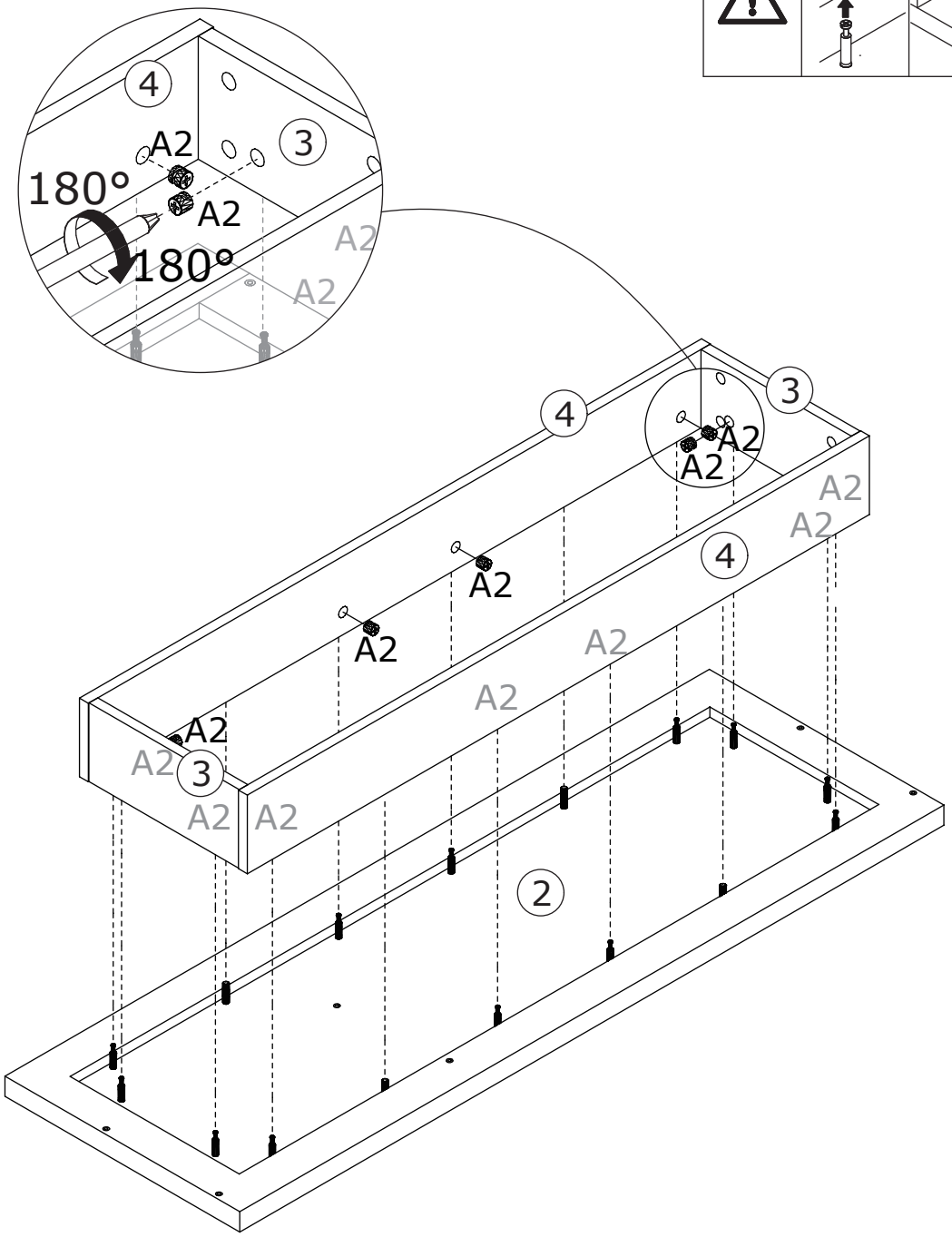

Connect plates 3 and 4 to plate 2, then tighten by turning eccentric wheel (A2) clockwise.

19

G x 6

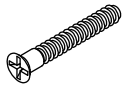

∅7 x 50 mm

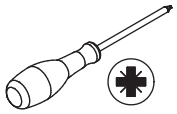

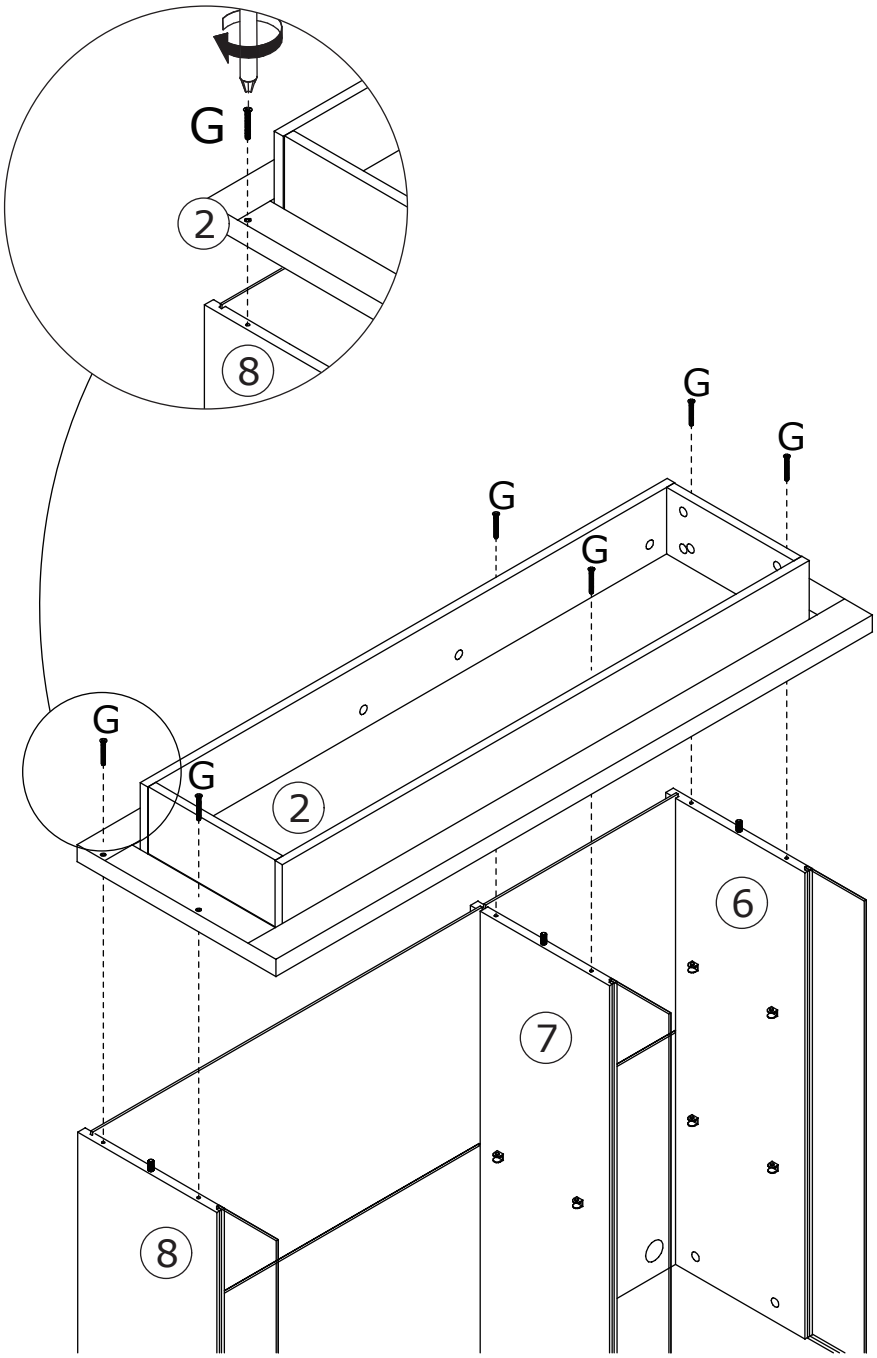

Connect plate 2 to plates 6, 7, and 8, and secure them with screw (G).

20

J x 1



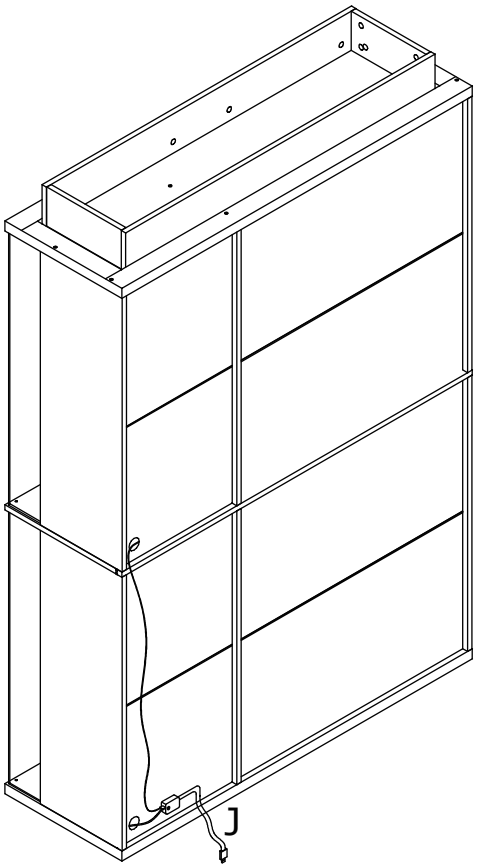

Thread the light strip (J) through the holes in the back plate 16 and attach it to plates 1 and 5.

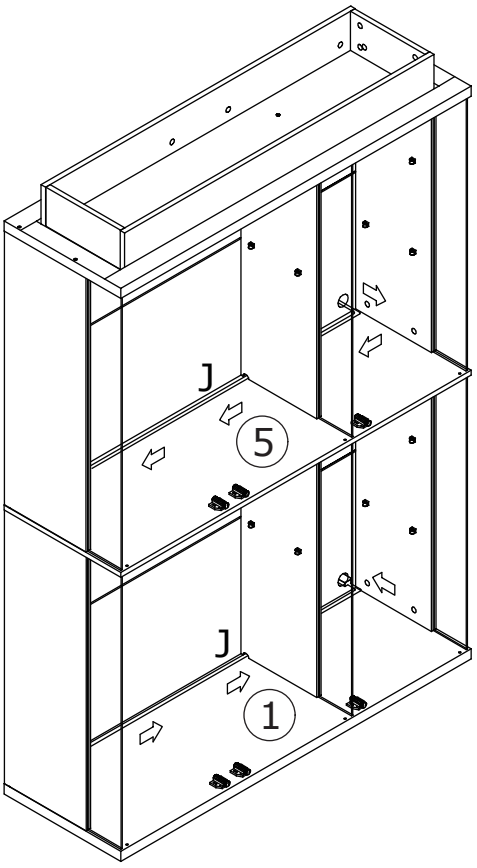

21

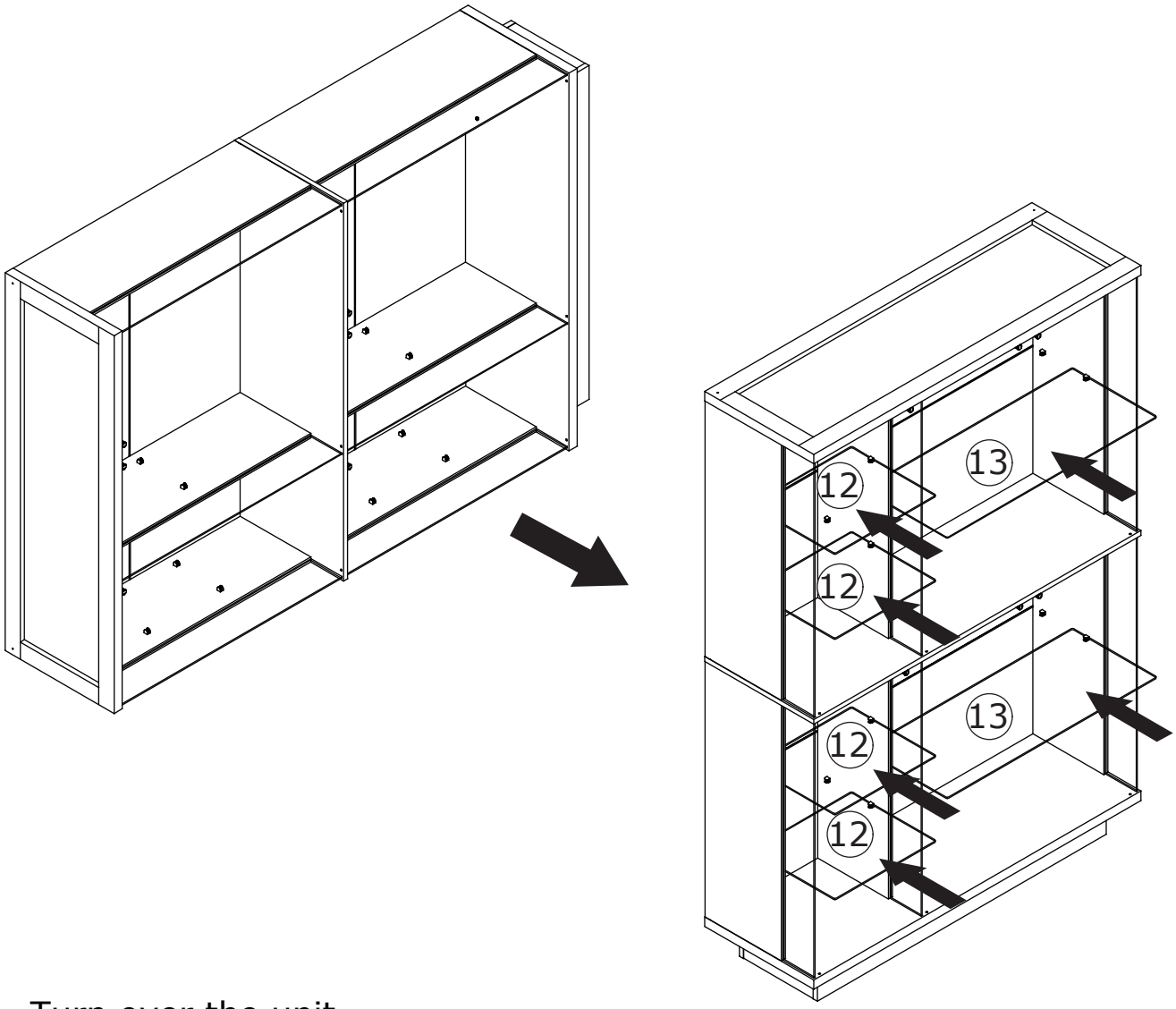

Turn over the unit.
Note: At least two adults are required.

Place glass plates 12 and 13 on pins.

22

F x 4
F1
x1
x1

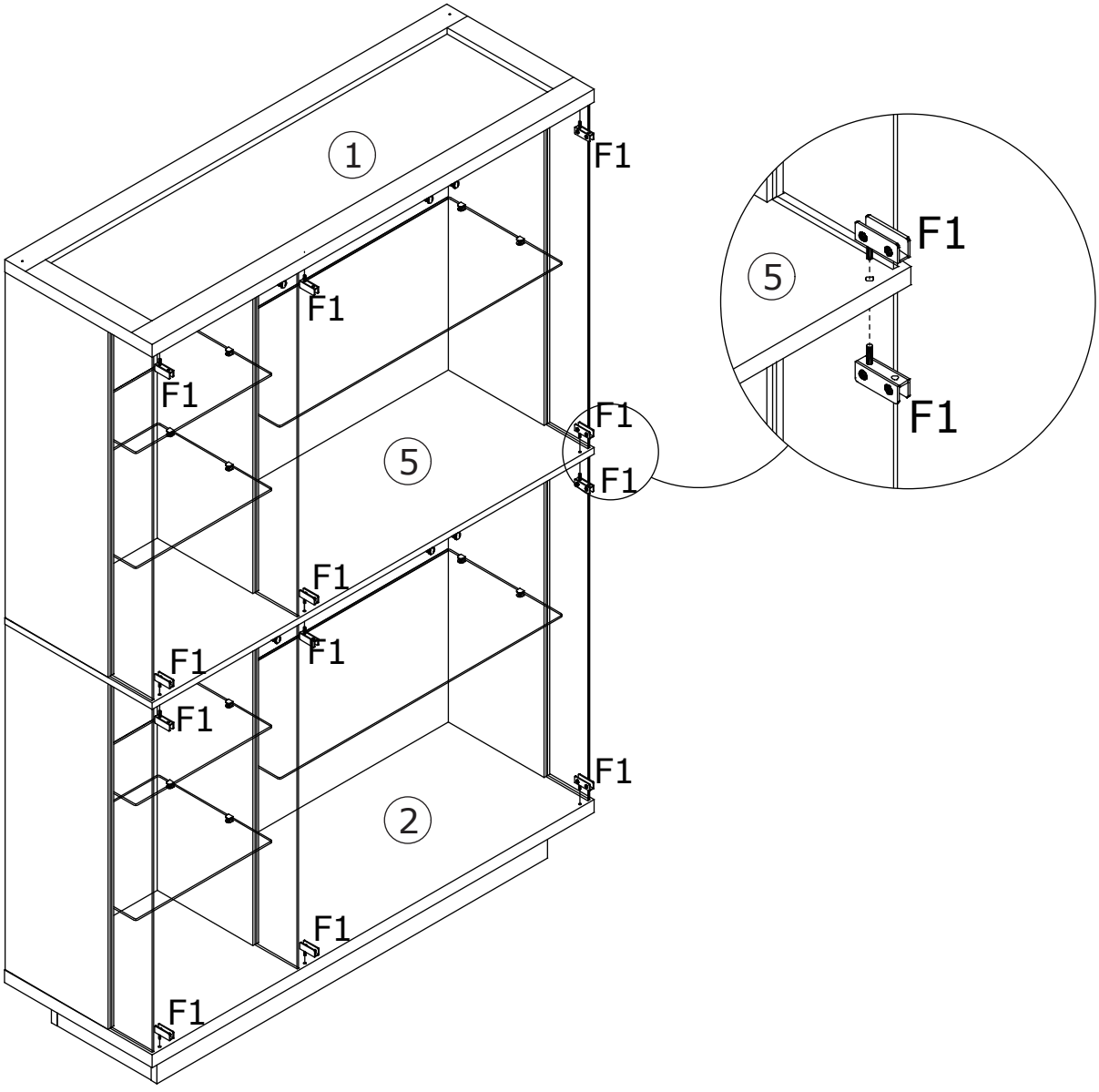

Install part (F1) to plates 1, 2, and 5.

23

F x 3

F2 x1

x2 x1

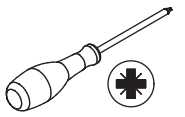

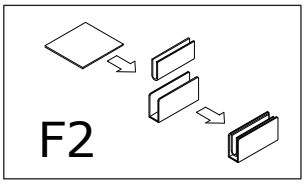

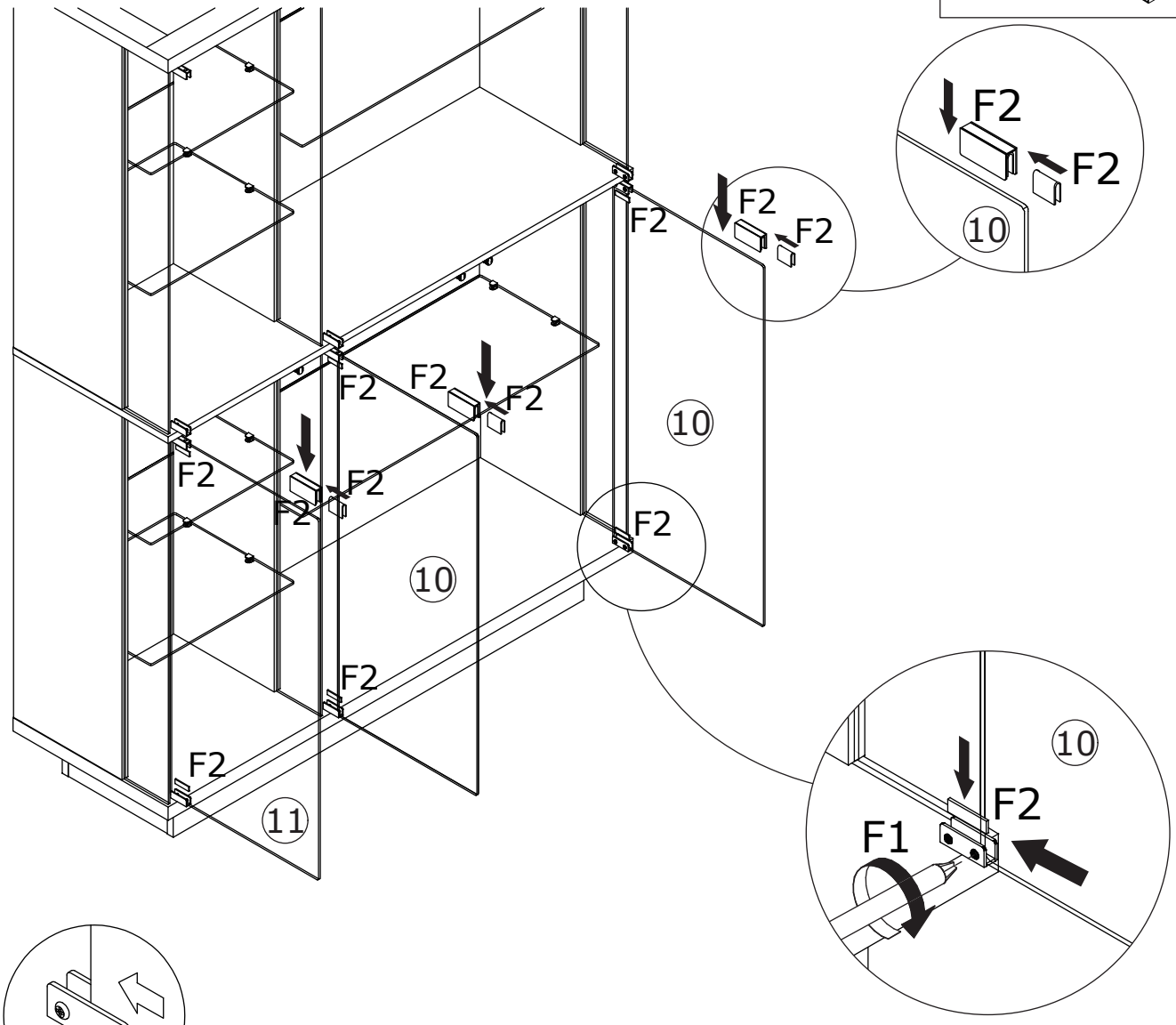

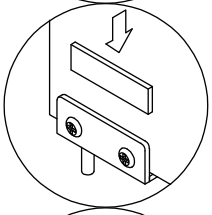

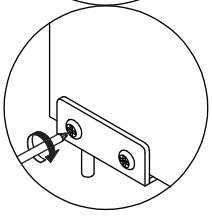

Slide gasket (F2) and glass plates 10 and 11 into the bottom part (F1).
Fold gasket (F2) in half and insert it into the top part (F1), then snap it into place against glass plates 10 and 11 as shown.

24

F x 3

F2 x1

x2 x1

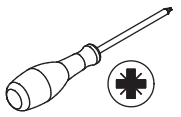

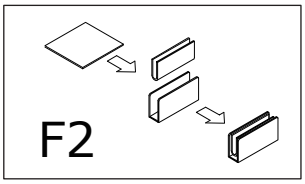

Slide gasket (F2) and glass plates 10 and 11 into the bottom part (F1).
Fold gasket (F2) in half and insert it into the top part (F1), then snap it into place against glass plates 10 and 11 as shown.

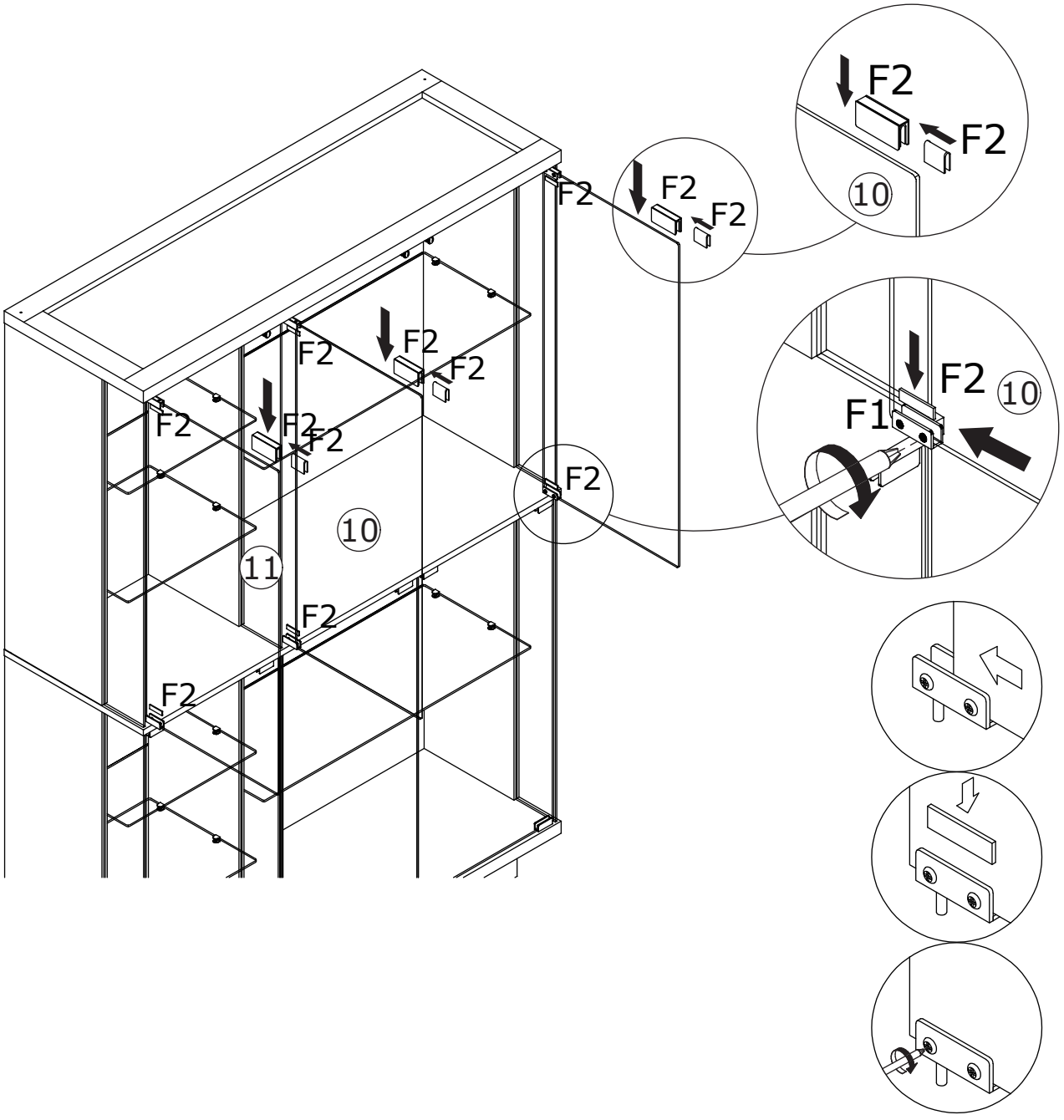

25

C x 30	H x 30	
 ∅3.5 x 14 mm		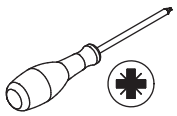

Insert clip (H) into the slots on the back plates and secure using screw (C).

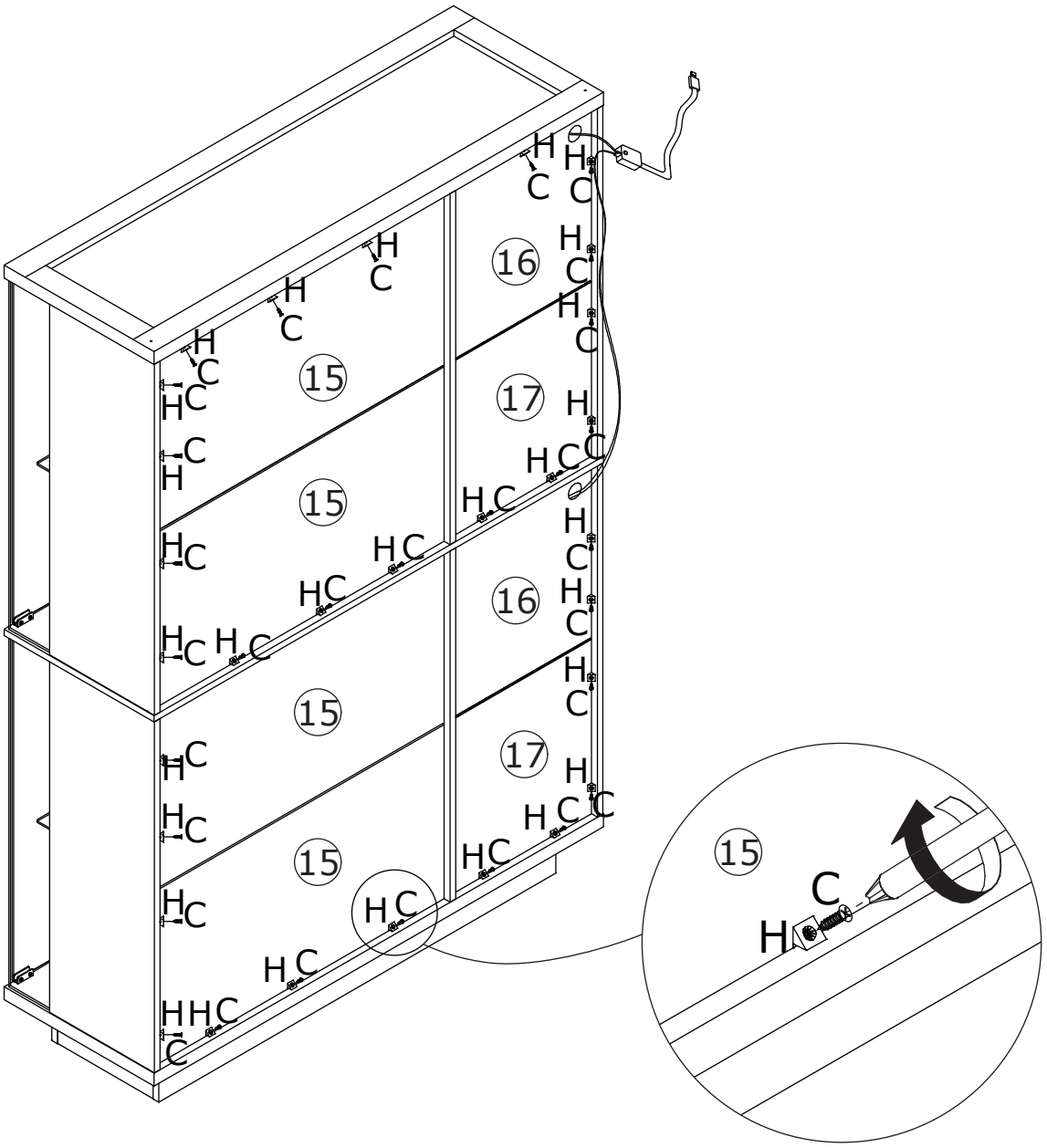

26

I x 1	K x 1	
	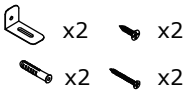	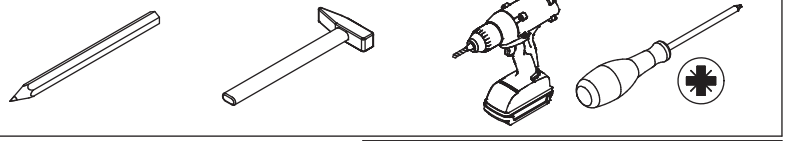

Install the anti-tip device as shown.
Apply masking tape (I) to the exposed hole in the eccentric wheel.

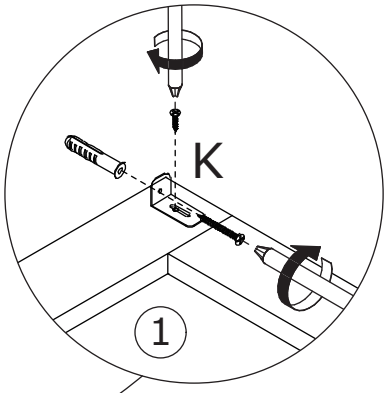

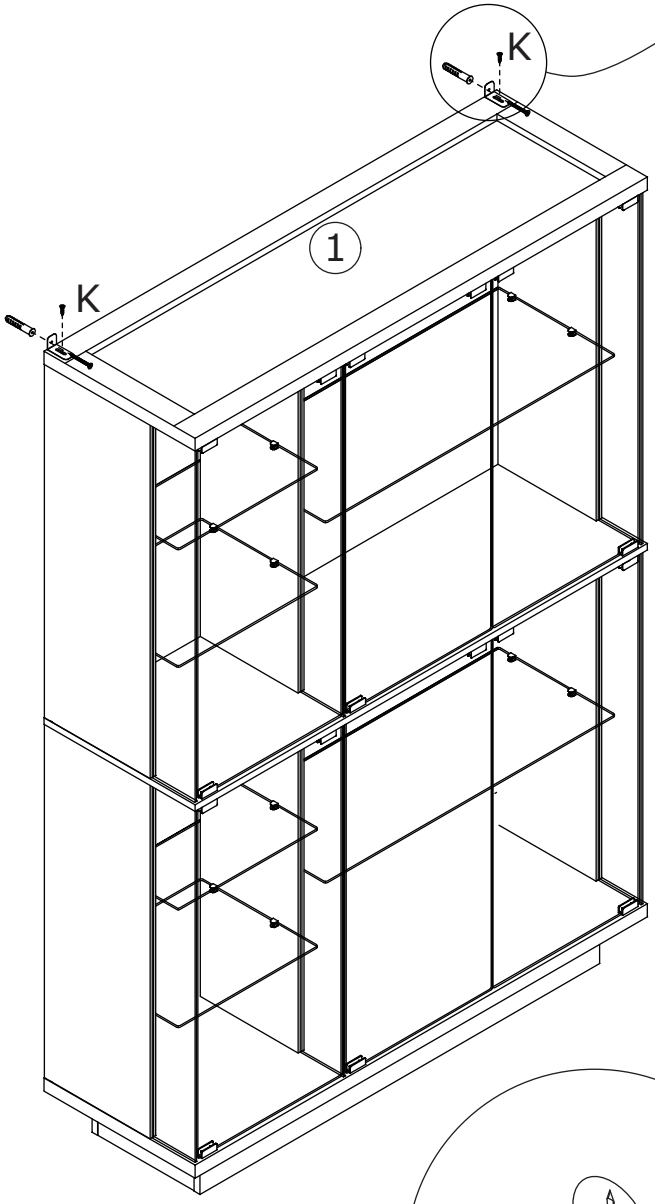

1.

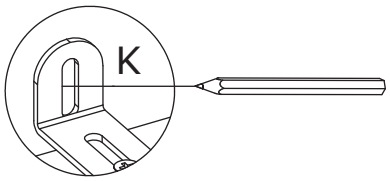

2.

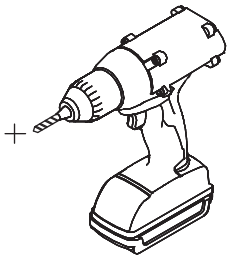

3.

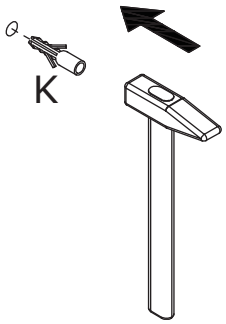

4.

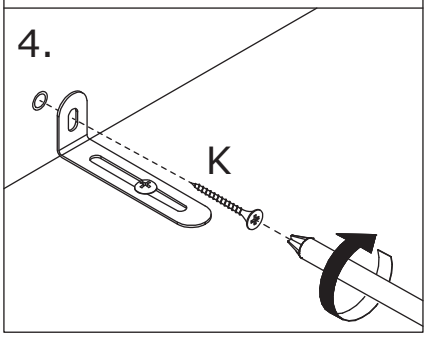

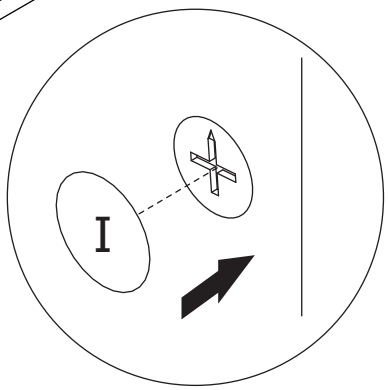

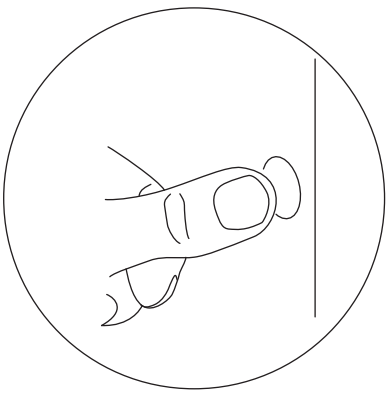

WARRANTY

WARRANTY CLAIMS

- There is a 30-day warranty for broken furniture or any other problems that do not work properly. The warranty will start from the date of purchase which must be verified by proof of purchase.

- Before making a claim, we may be able to answer your query, simply call us. Please leave your purchase order number, along with some details of the problem, if you want a replacement part. We will arrange within 48 hours. If there is out of stock, we will reply with a shipping date.

- The product must be used in accordance with the instructions provided. For health reasons.

- For other reasons, if the furniture needs to be returned, it must be cleaned and dried and operated within 30 days of receipt.

Type of Warranty Claim

- Failure to follow the furniture instructions will invalidate the warranty. Attention please.

- Does not include damage during installation, but includes damage during transportation.

Scope of responsibility

- Shall not bear any responsibility for misuse or user damage and / or loss of parts during the installation of furniture.

- After using, the damage and scratches of the furniture are not covered by the warranty.

The Warranty Relates to All Bought in The Us and Covers The Following Areas

- Sheet parts: 1 month from the date of purchase.

- Electrical parts: 1 month from the date of purchase.

RETURNS

CHANGED YOUR MIND AND NEED TO RETURN YOU ITEM?

PLEASE FOLLOW THE BELOW INSTRUCTIONS:

- If you have purchased and have simply changed your mind, follow the retailer's instructions for returns.

DEFECTIVE ITEMS

- If your item is defective in any way, i.e. it doesn't work but you can't identify why, in the first instance, please call us.

DAMAGED ITEMS

- If you receive an order with obvious shipping damage from the retailer, then we suggest the delivery is refused. If the delivery has been accepted and then shipping damage is found, please follow the specific instructions advised by the retailer.
  In all circumstances please save all packaging material and paperwork for the order. Please be aware that if you dispose of packaging material or attempt to return the merchandise without contacting the fulfiller, you jeopardise your chances of making a claim, and you may not receive a credit for the return.

AFTER-SALES CONTACT


adelahu@fufugaga.com


208-820-0068