Dog Crate

Assembly Instruction – Please keep properly for future reference.

If you find any missing boxes, damaged parts, or accessory shortages, please contact the customer service team of your purchasing channel immediately. We will resolve the issue as quickly as possible.

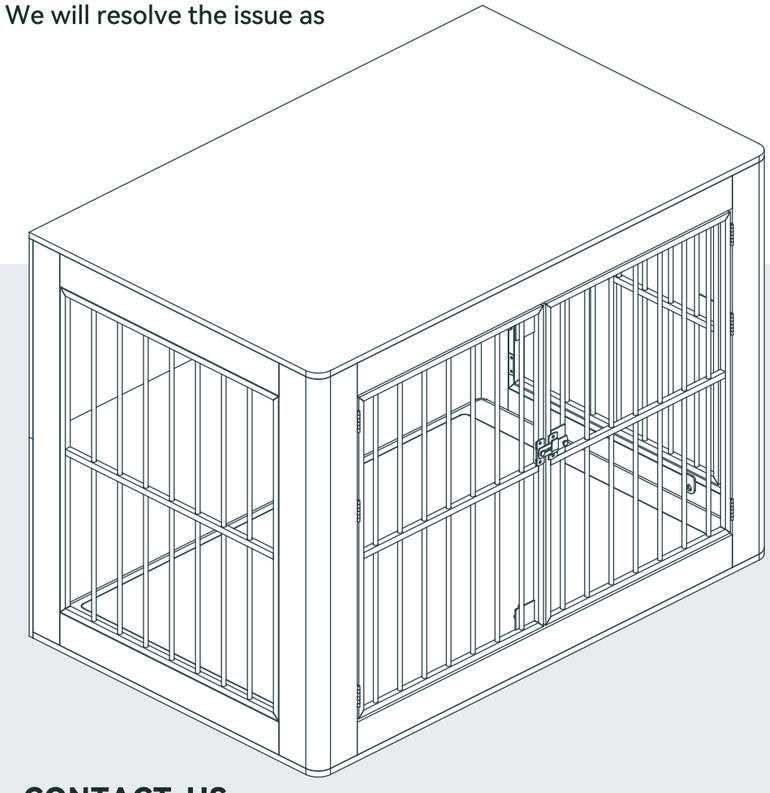

SKU:
C003017050
C003017060

V1.0

US-EN

CONTACT US

- **Email: service@grandtunnel.com**
  In order to receive assistance more quickly, please provide

THE FOLLOWING INFORMATION:

- Order number
- Purchase platform
- Purchase date
- Detailed description of the issue along with photos (if applicable)

Important – Please read these instructions carefully before starting the installation.

Dog Crate

Before Assembly

Thank you for choosing our product!
To ensure a smooth installation process, please read this guide carefully to familiarize yourself with the required tools, materials, and installation steps.
Follow the relevant sections to avoid any damage caused by improper installation, and make sure to review all operation and safety guidelines for correct installation procedures.

Packaging Notice:

If you find any missing boxes, damaged parts, or accessory shortages, please contact the customer service team of your purchasing channel immediately. We will resolve the issue as quickly as possible.

Safety and Care Advice

Important :
Please read these instructions fully before starting assembly.

- Check you have all the components and tools listed on the following pages.
- Remove all fittings from the plastic bags and separate them into their groups.
- Keep children and animals away from the work area, small parts could choke if swallowed.
- Make sure you have enough space to layout the parts before starting.
- During assembly do not stand or put weight on the product, this could cause damage.
- Assemble the item as close to its final position (in the same room) as possible.
- Assemble on a soft level surface to avoid damaging the unit or your floor.
- Parts of the assembly will be easier with 2 people.



- To reduce the likelihood of damaging your product please ensure that your power drill is set on a low torque setting.

Email : **service@grandtunnel.com**

Care and Maintenance

- Only clean using a damp cloth and mild detergent, do not use bleach or abrasive cleaners.
- From time to time check that there are no loose screws on this unit.
- This product should not be discarded with household waste. Take to your local authority waste disposal center.

Handy Hints

- Assemble all parts and bolts loosely during assembly, only once the product is complete should you fully tighten the bolts.
- Regularly check and ensure that all bolts and fittings are tightened properly.

Warning

In order to help prevent overturning, please follow these instructions.

- Use the anti tip strap or wall fixing method provided (if applicable).
- Do not allow children to climb or hang on the furniture.
- Do not open more than one drawer at a time.
- Do not place heavy items in the top drawers.
- Do not place heavy items on top of the furniture, unless the furniture has been designed for this purpose.
- Please note that only the anti tip strap is provided. You will need to provide wall plugs and screws applicable for your wall type.

Email : **service@grandtunnel.com**

EN

Customer Service Guide

Thank you for choosing our product! We are committed to providing you with excellent service. If you find any missing parts, damaged packaging, or product damage after receiving all packages, please follow the steps below to quickly contact our customer service team. We will do our best to resolve your issue.

1. Missing Parts

Verify Parts:

1. Refer to the “Parts List” in the manual to verify the name, specifications, and quantity of the missing parts.
2. Take a clear photo of the parts list and mark the missing parts with detailed information, e.g., “Missing 5 pieces of M6×30mm screws.”

Contact Us:

By Email:

Send an email to **service@grandtunnel.com**, with the subject line “Missing Parts Issue.” Include the following in the email:

- A description of the missing parts and a photo of the parts list.
- Order details (order number, purchase platform, purchase date).

2. Product or Packaging Damage

If it affects normal use:

Steps:

1. Take clear photos or videos showing the damaged parts and the extent of the damage (multi-angle shots are recommended).
2. Email the photos/videos along with order details to **service@grandtunnel.com**, with the subject line “Product Damage Issue.”

Resolution:

After verification, we will arrange for a replacement part, product exchange, or refund as quickly as possible.

If it does not affect normal use:

Steps:

1. Contact our customer service team (by email: **service@grandtunnel.com**).
2. Provide a description of the damage and include relevant photos or videos.

Resolution:

We will provide repair guidance or an appropriate compensation plan based on the specific situation.

Contact Us:

Customer Service Email: **service@grandtunnel.com**

Helpful Tips

To process your issue efficiently, please prepare the following information:

- Order details (order number, purchase platform, purchase date).
- Clear photos or videos.
- We are committed to providing quick and professional solutions, no matter the size of the issue, to ensure your satisfaction.

Thank you for your trust and support!
We hope you enjoy using our product!

EN

Parts List - Panels

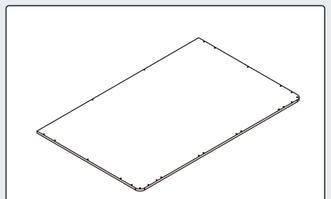

1 1100X701X12mm x1

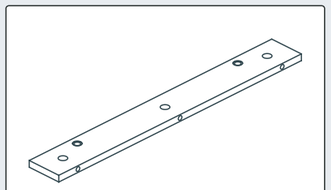

2 532X65X12mm x2

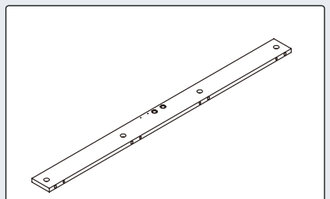

3 910X65X12mm x1

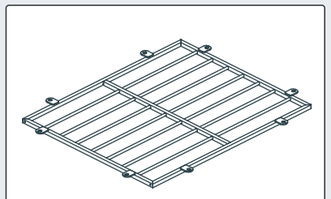

4 697X583X15mm x1

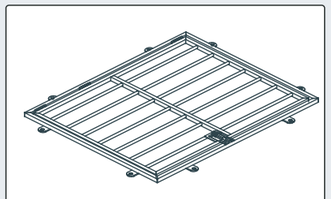

5 697X583X21mm x1

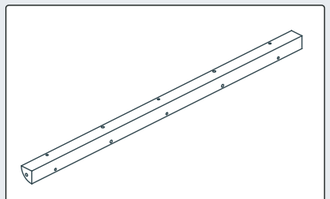

7 776X30X30mm x2

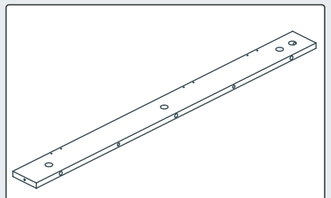

8 776X65X12mm x1

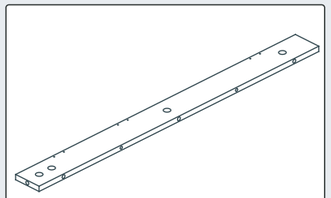

9 776X65X12mm x1

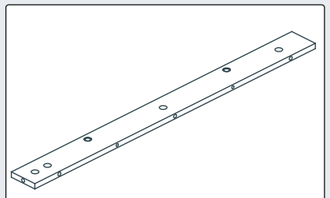

10 776X65X12mm x1

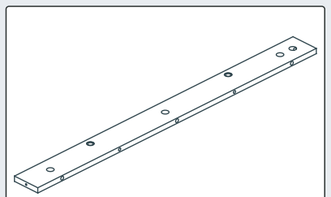

11 776X65X12mm x1

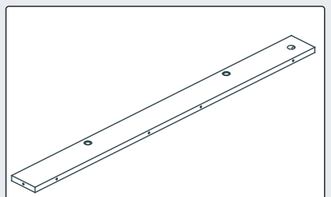

12 776X65X12mm x1

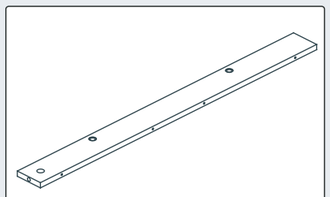

13 776X65X12mm x1

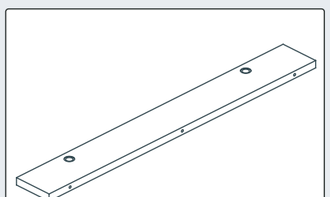

14 532X65X12mm x2

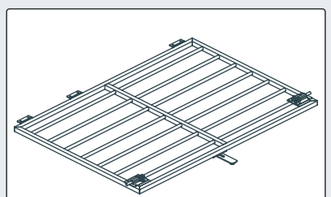

15 636X465X28mm x1

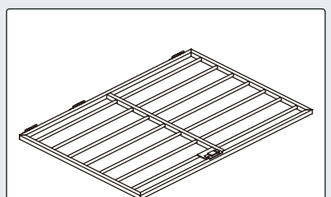

16 632X461X19mm x1

Email : **service@grandtunnel.com**

Parts List - Panels

EN

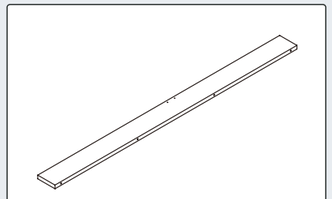

17 910X65X12mm x1

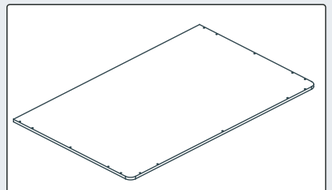

18 1100X692X12mm x1

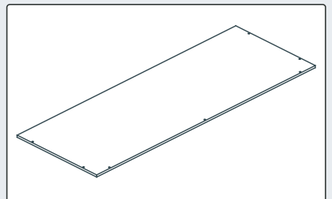

19 1100X394X9mm x1

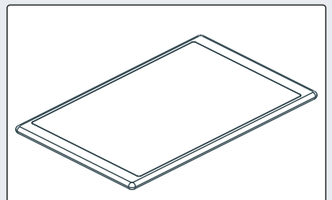

20 1075X680X30mm x1

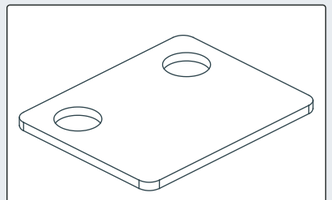

21 50X40X2mm x1

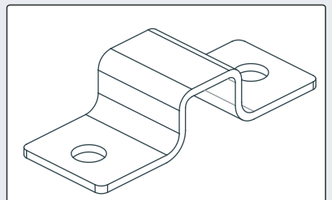

22 35X13X8mm x2

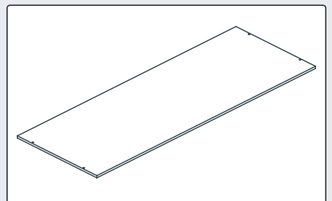

23 1100X394X9mm x1

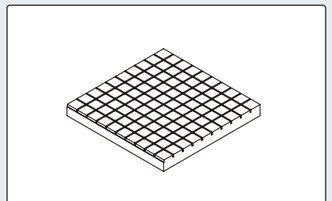

24 50X50X5mm x6

Email : **service@grandtunnel.com**

EN

Parts List - Fittings

Please check you have all the fittings listed below.

Note: The quantities below are the correct amount to complete the assembly. In some cases more fittings may be supplied are required.

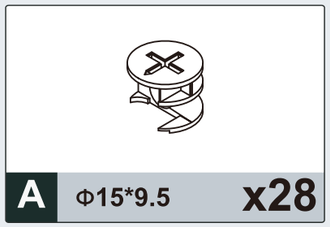

A Φ15*9.5 **x28**

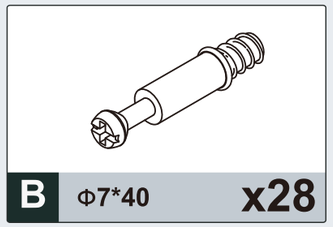

B Φ7*40 **x28**

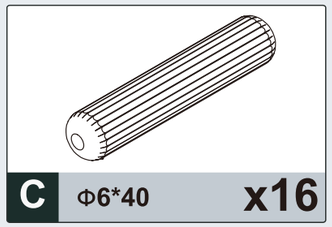

C Φ6*40 **x16**

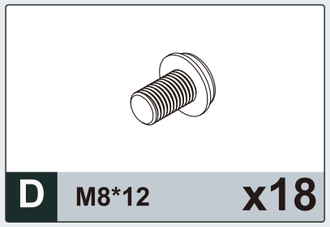

D M8*12 **x18**

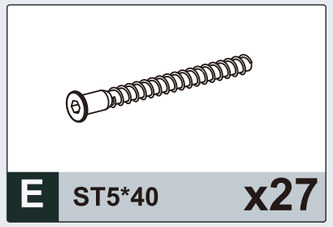

E ST5*40 **x27**

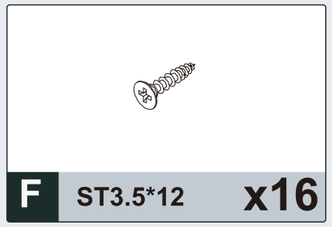

F ST3.5*12 **x16**

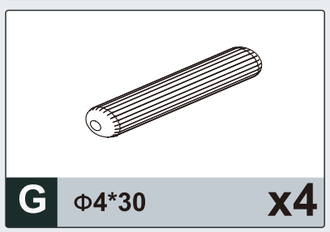

G Φ4*30 **x4**

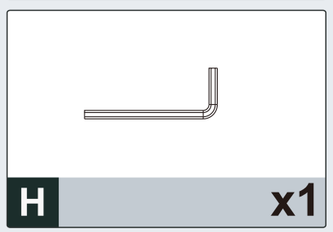

H **x1**

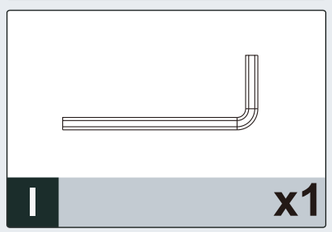

I **x1**

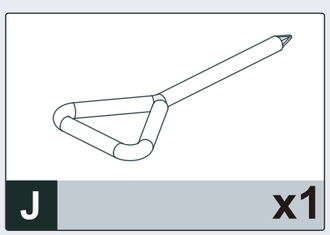

J **x1**

Cam Lock Fastening System

Insert the cam bolt into the hole first, then insert the cam lock and lock it.

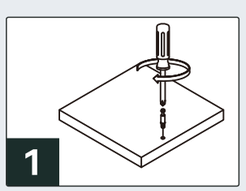

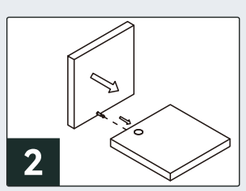

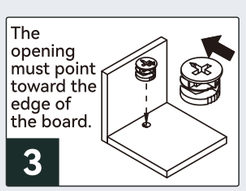

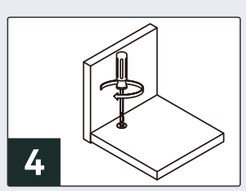

Email : **service@grandtunnel.com**

Assembly Instructions

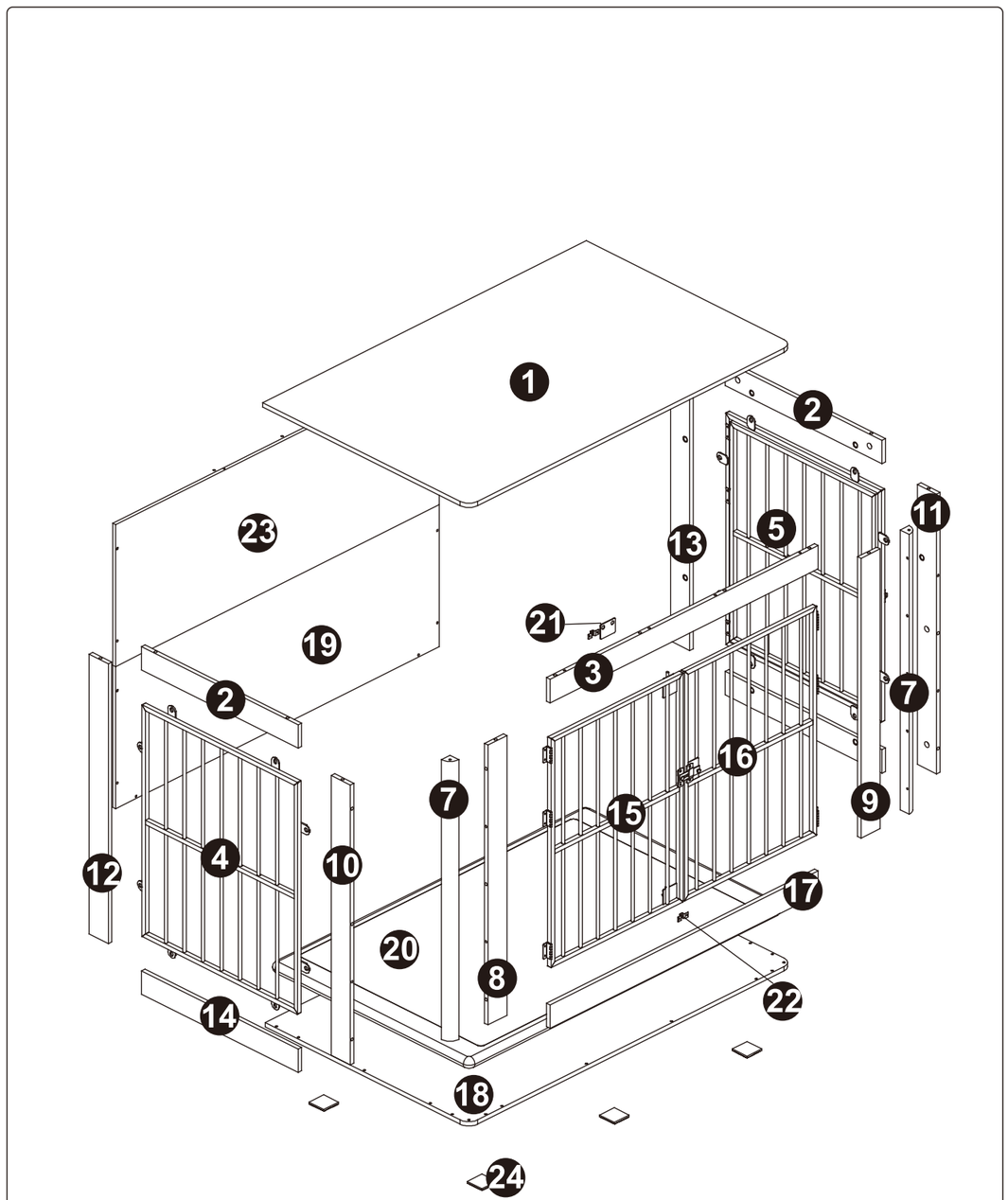

EN

Email : **service@grandtunnel.com**

EN

Step 1

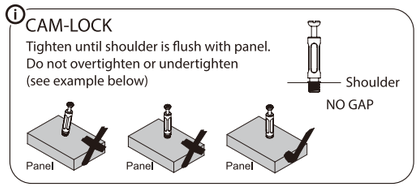

Ⓑ	X12
Ø 7x40	

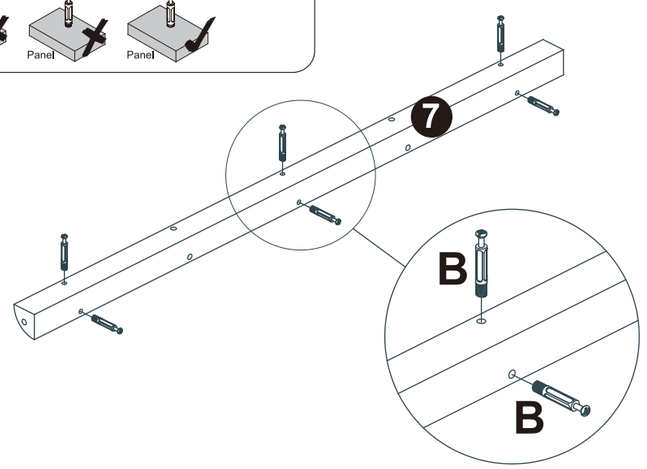

As shown, install Part (B) onto Part (7).

x2

Step 2

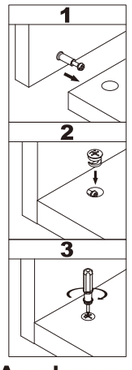

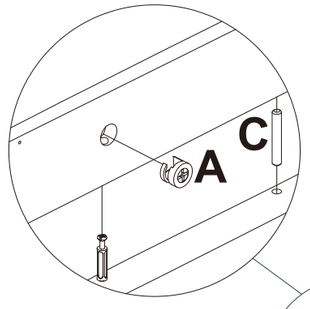

Ⓐ	X6
Ø 15x9.5	

Ⓒ	X4
Ø 6x40	

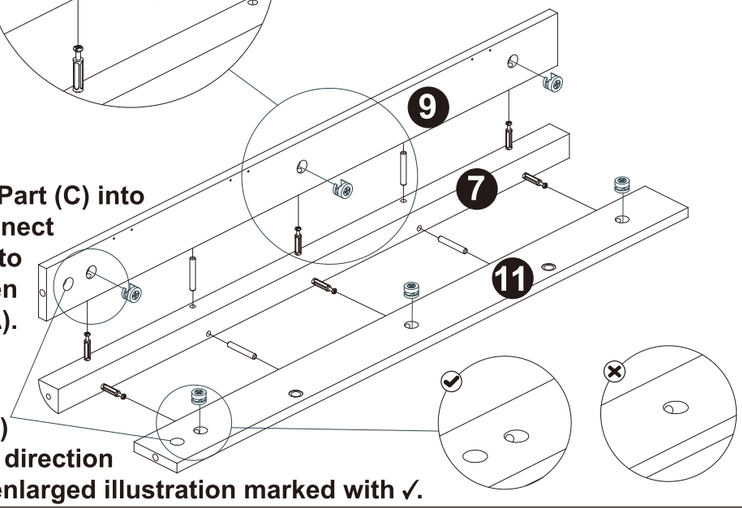

As shown, insert Part (C) into Part (7). Then connect Parts (9) and (11) to Part (7) and tighten them with Part (A).

⚠ Install Parts (9) and (11) in the direction shown in the enlarged illustration marked with ✓.

Email : service@grandtunnel.com

Step 3

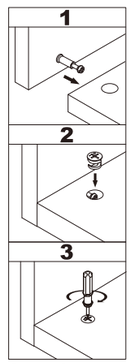

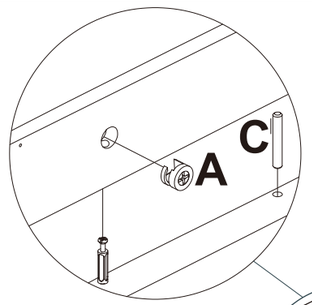

Ⓐ	X6
Ø 15x9.5	

Ⓒ	X4
Ø 6x40	

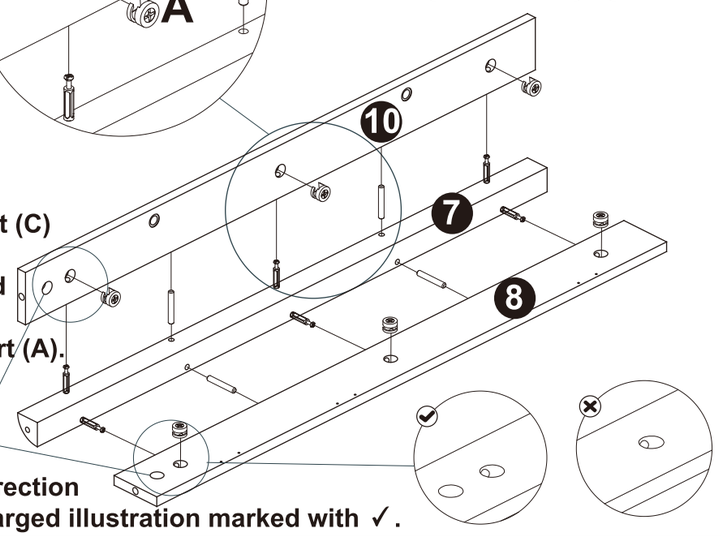

As shown, insert Part (C) into Part (7). Then connect Parts (8) and (10) to Part (7) and tighten them with Part (A).

⚠ Install Parts (8) and (10) in the direction shown in the enlarged illustration marked with ✓.

Step 4

Ⓕ	X6
ST3.5X12	

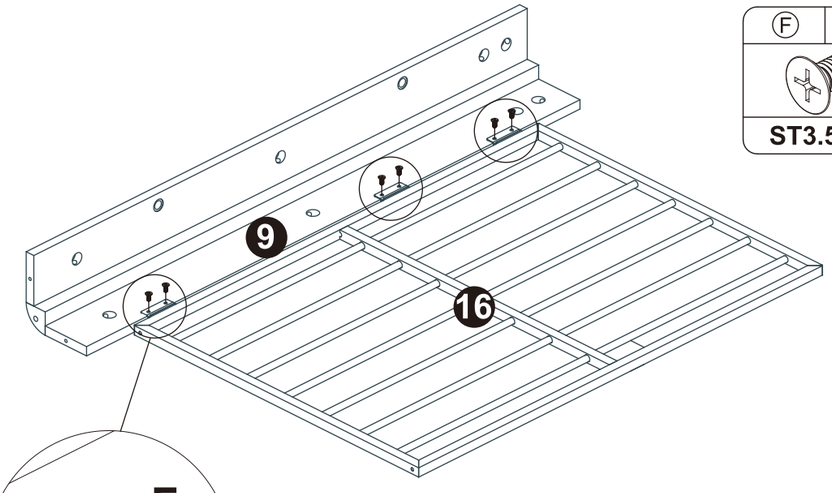

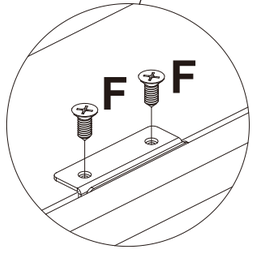

As shown, use Part (F) to secure Part (16) to Part (9).

Email : service@grandtunnel.com

EN

Step 5

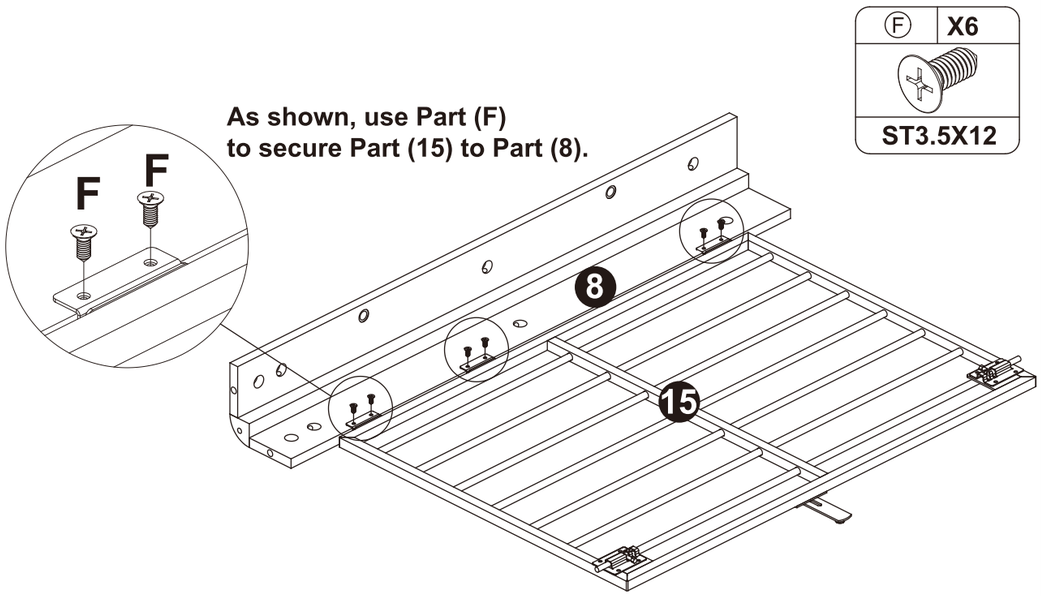

Step 6

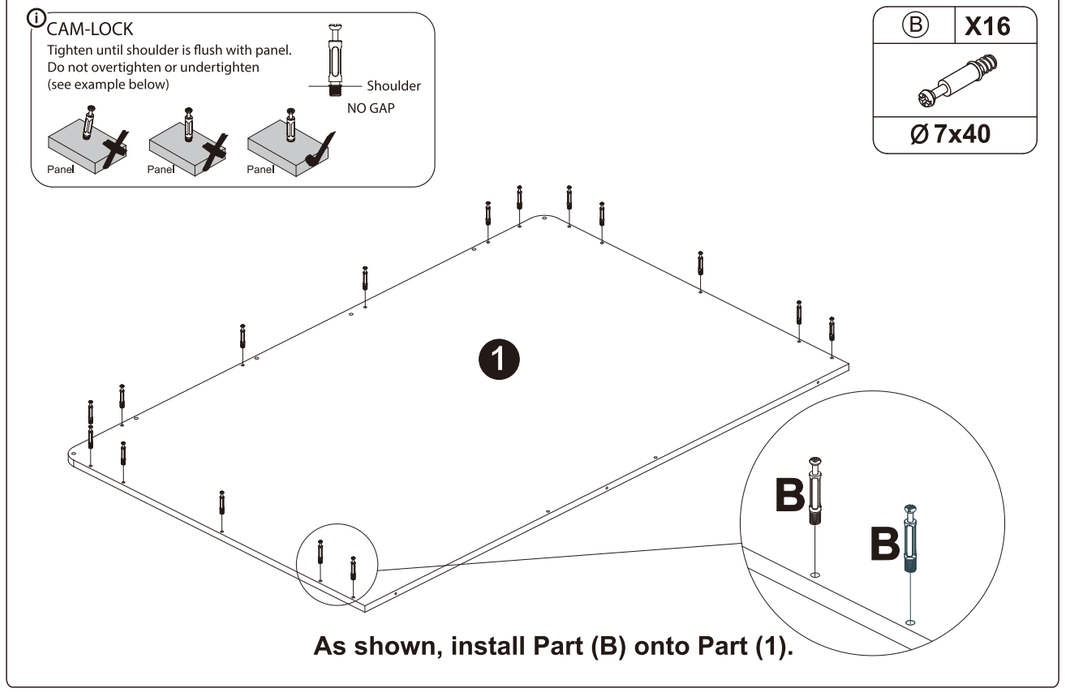

Email : **service@grandtunnel.com**

EN

Step 7

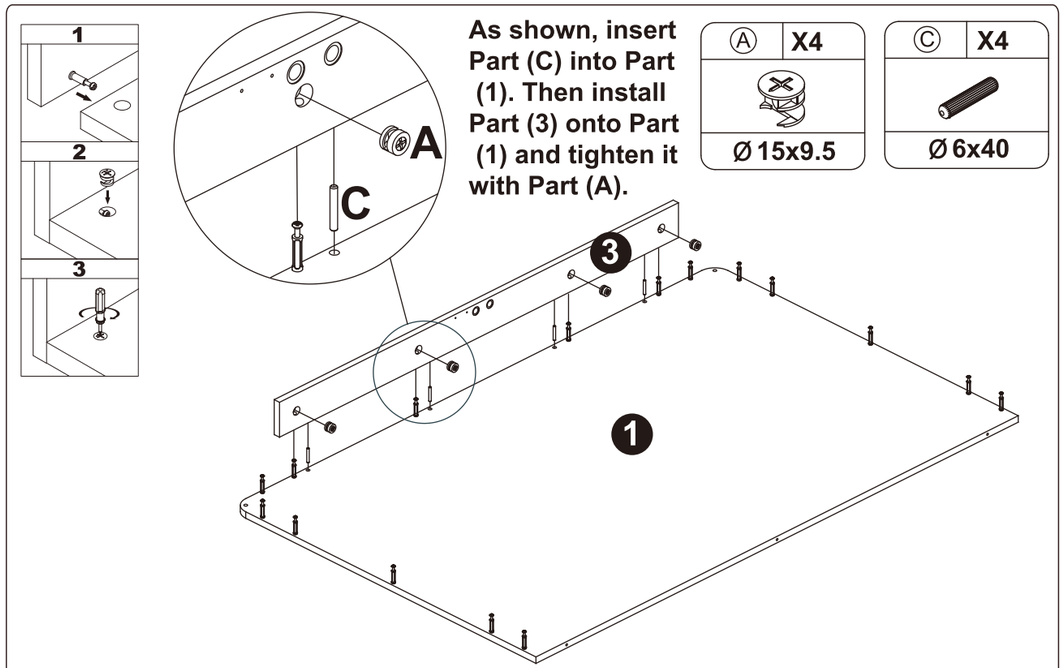

Step 8

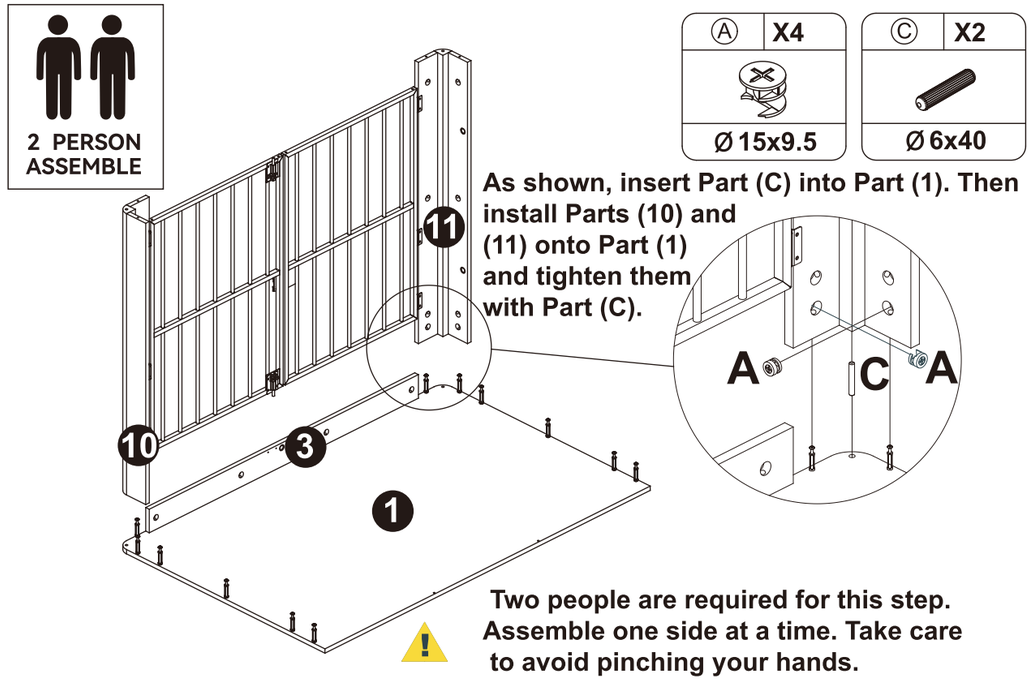

Email : **service@grandtunnel.com**

EN

Step 9

As shown, use Part (D) to secure Part (21) to Part (3).
As shown, use Part (F) to secure Part (22) to Part (3).

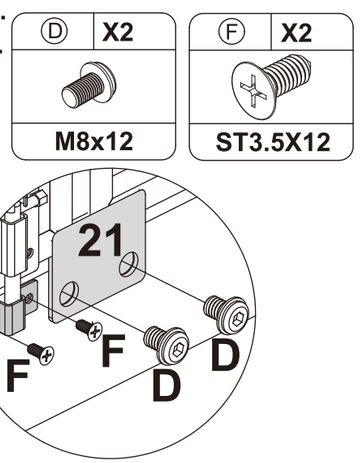

Step 10

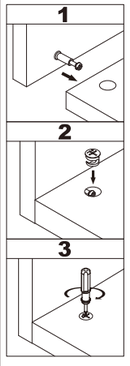

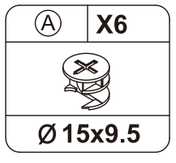

As shown, connect Part (2) to Part (1) and tighten it with Part (A).

Email : service@grandtunnel.com

EN

Step 11

⚠ When installing Parts (12) and (13), make sure the nut holes face inward. Install them as shown in the enlarged illustration marked with ✓.

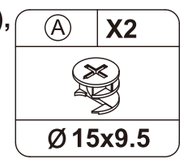

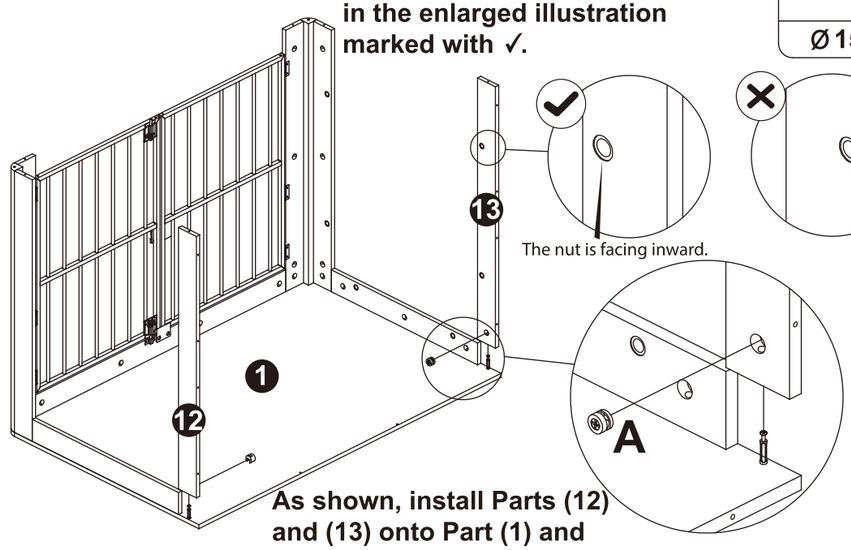

As shown, install Parts (12) and (13) onto Part (1) and tighten them with Part (A).

Step 12

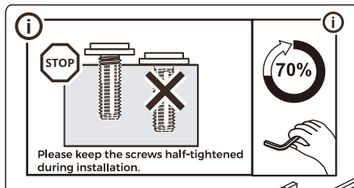

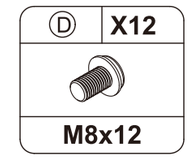

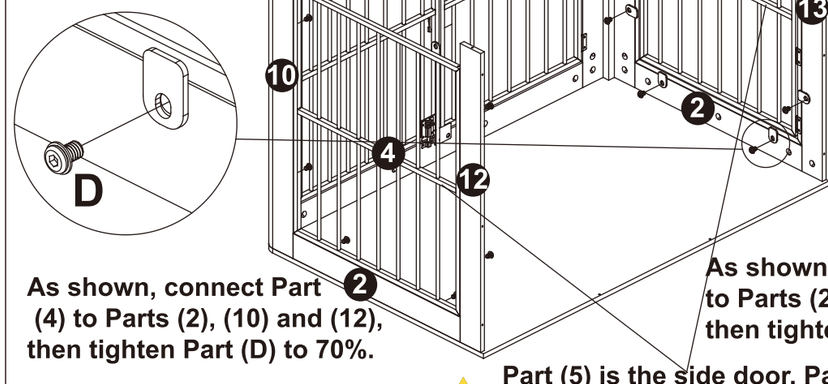

As shown, connect Part (4) to Parts (2), (10) and (12), then tighten Part (D) to 70%.

As shown, connect Part (5) to Parts (2), (11) and (13), then tighten Part (D) to 70%.

⚠ Part (5) is the side door. Parts (4) and (5) can be installed in opposite positions according to your needs.

Email : service@grandtunnel.com

EN

Step 13

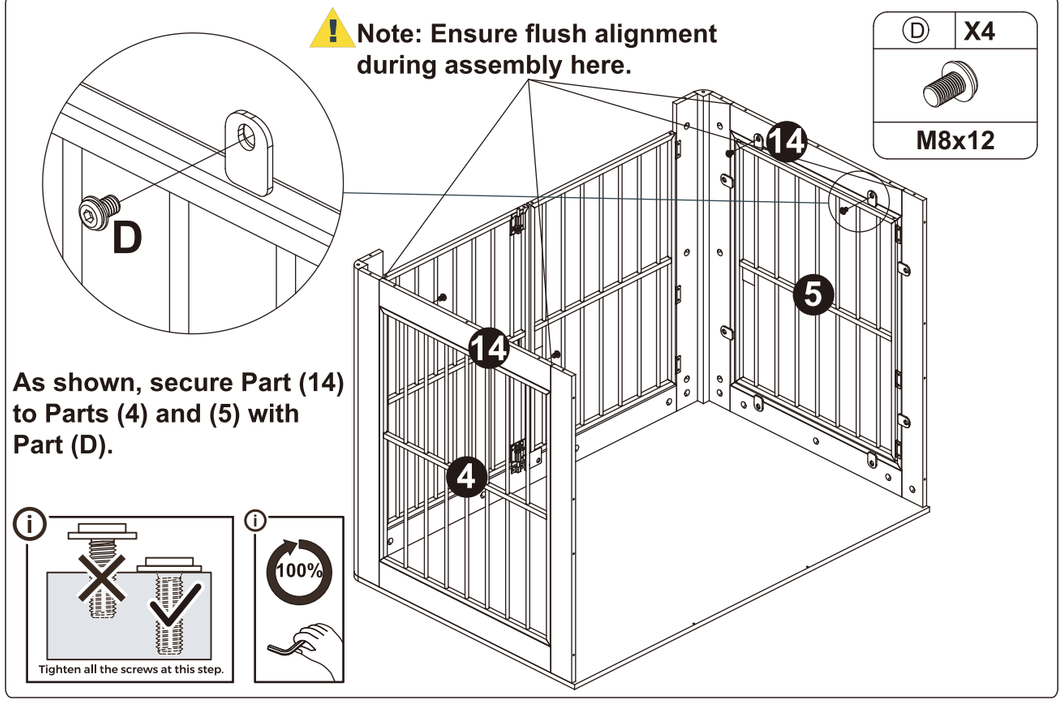

Step 14

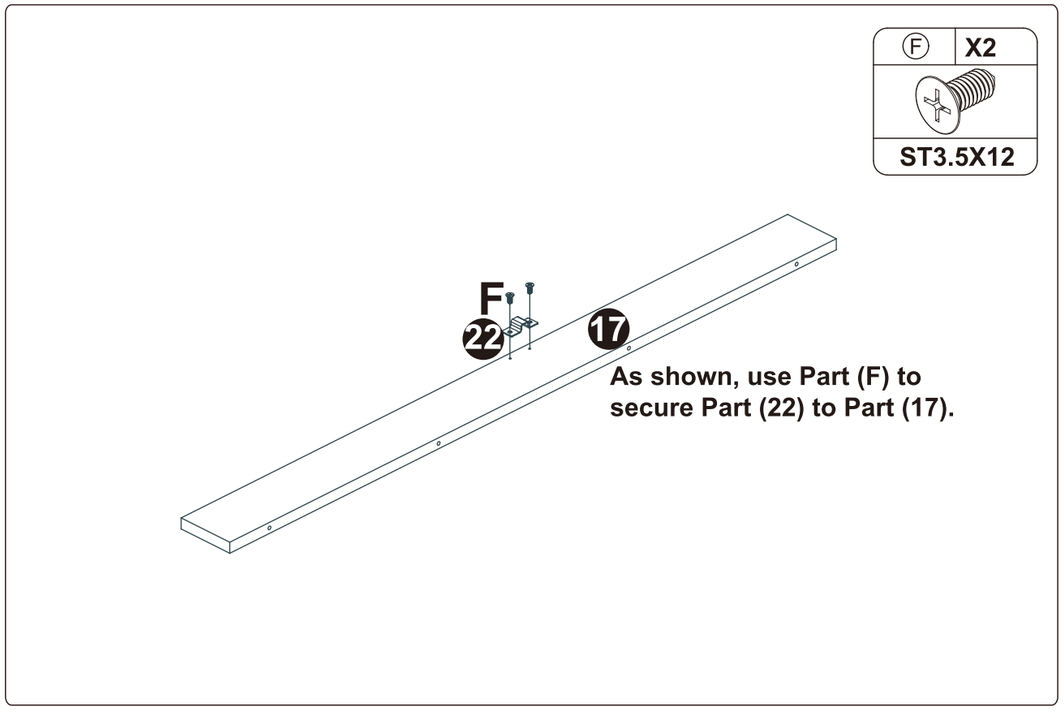

EN

Step 15

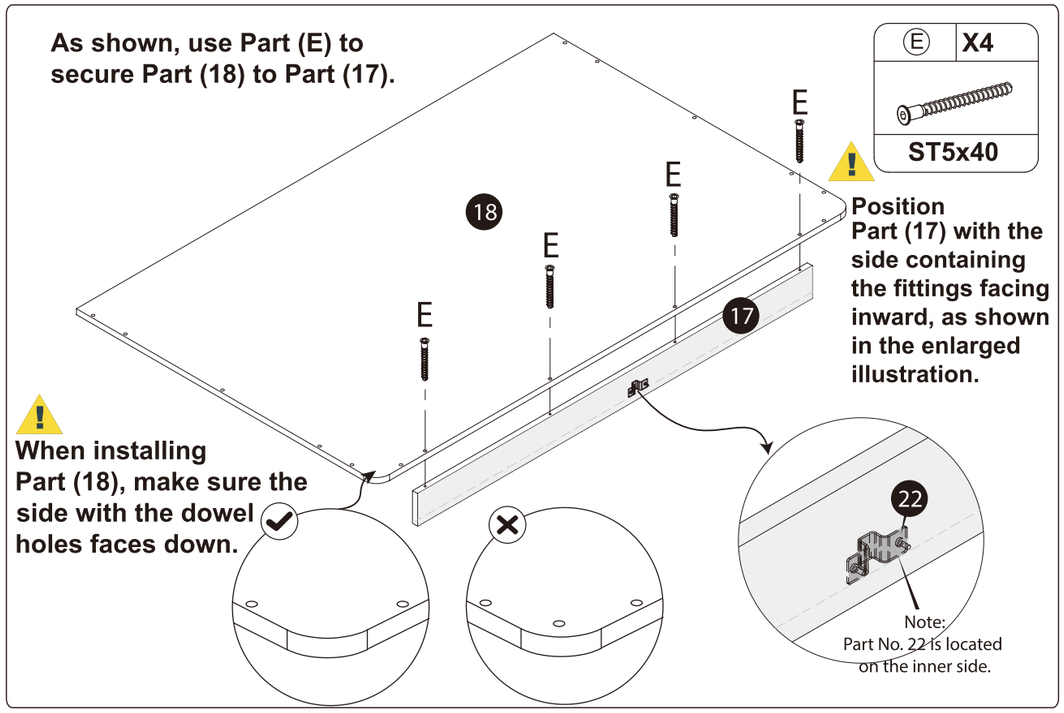

Step 16

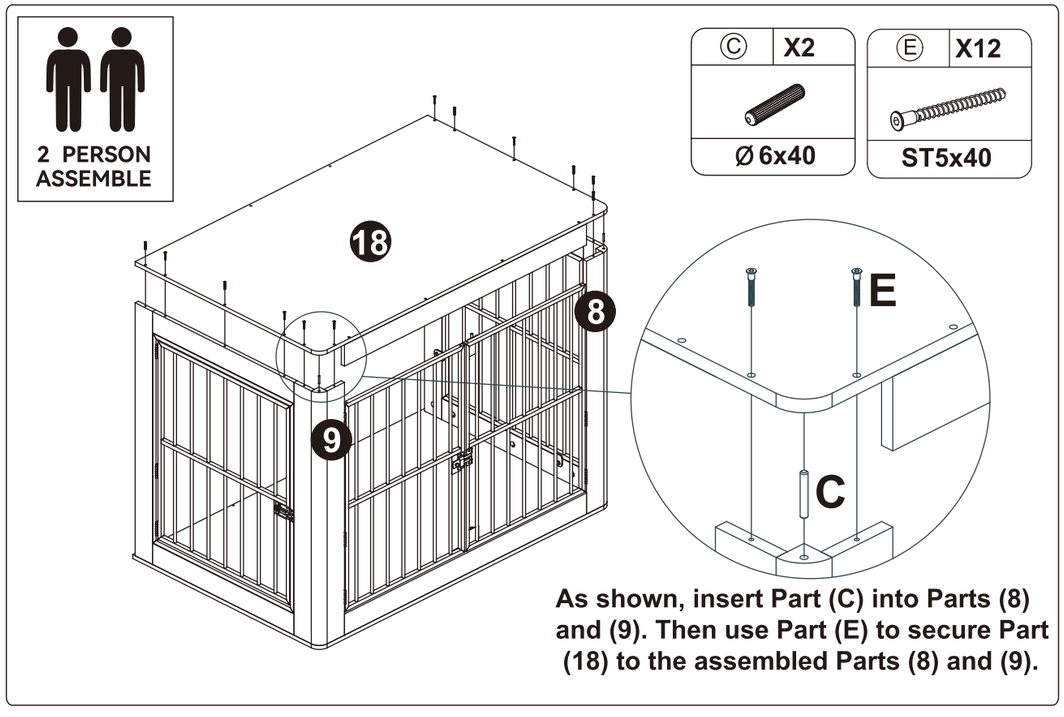

Step 17

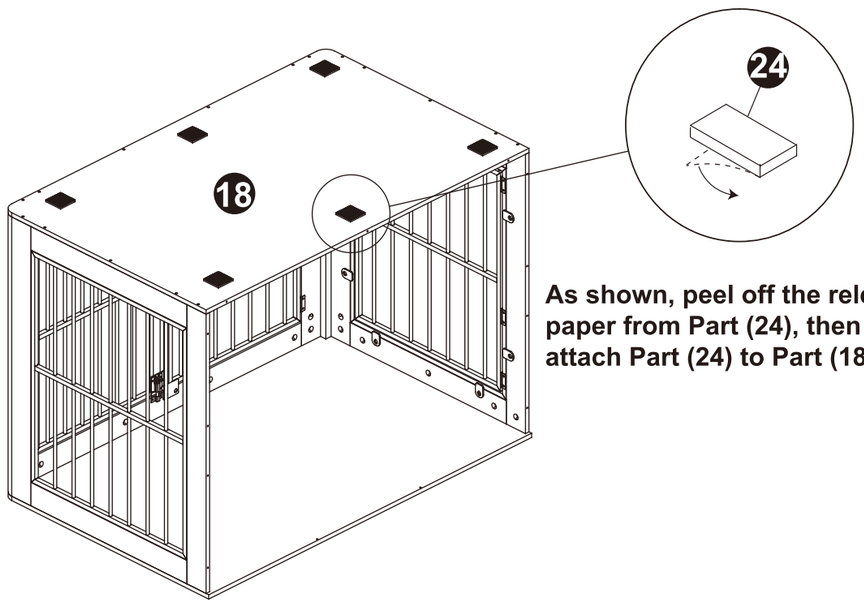

As shown, peel off the release paper from Part (24), then attach Part (24) to Part (18).

Step 18

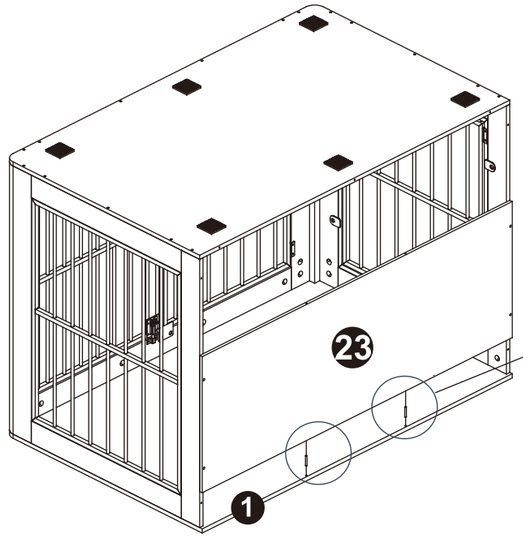

As shown, connect Part (23) to Part (1) using wooden dowels.

Email : service@grandtunnel.com

EN

Step 19

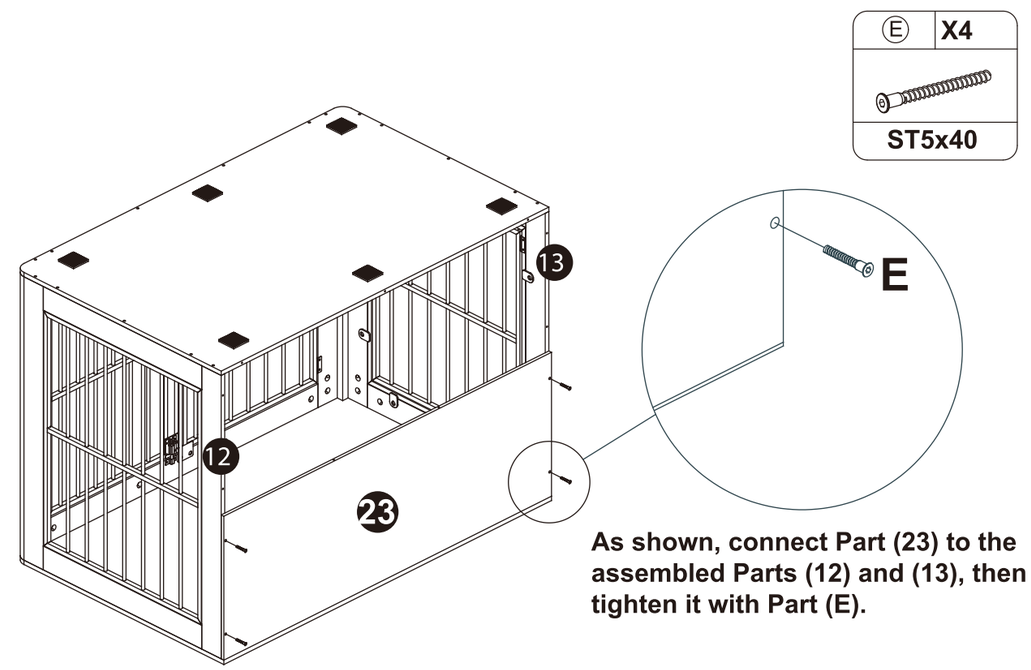

As shown, connect Part (23) to the assembled Parts (12) and (13), then tighten it with Part (E).

Step 20

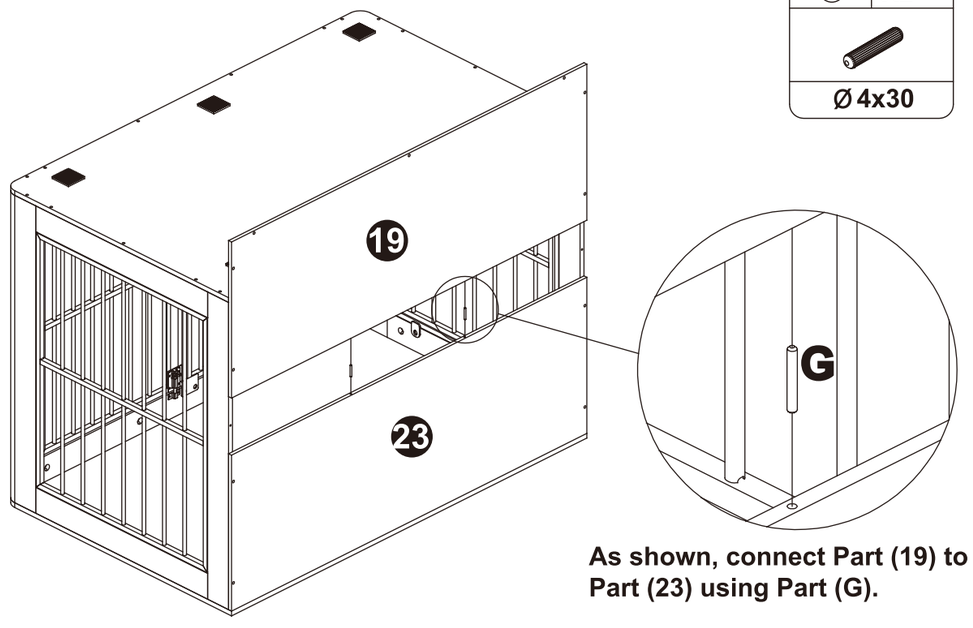

As shown, connect Part (19) to Part (23) using Part (G).

Email : service@grandtunnel.com

EN

Step 21

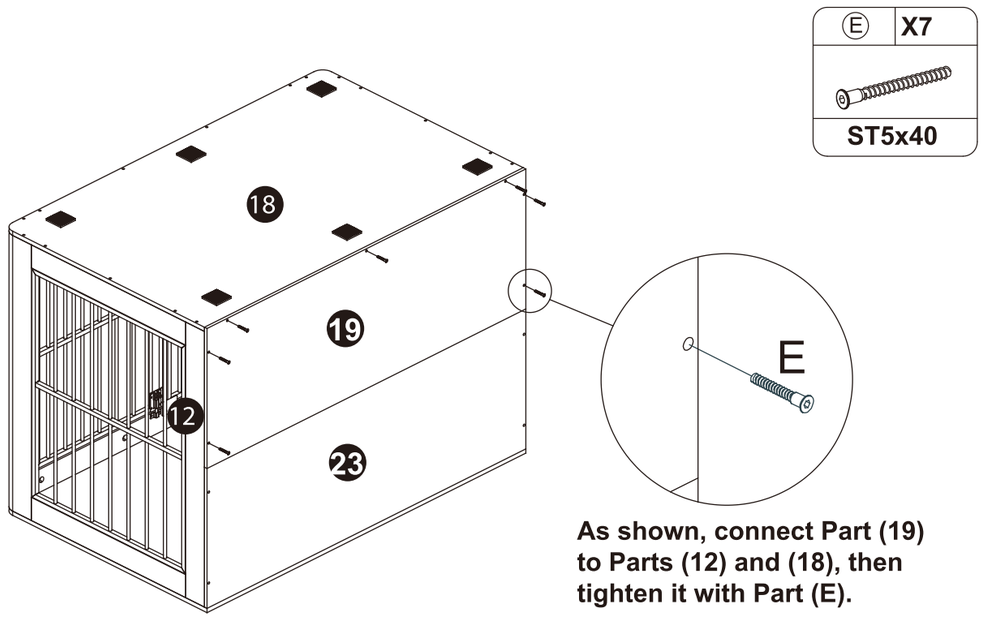

As shown, connect Part (19) to Parts (12) and (18), then tighten it with Part (E).

Step 22

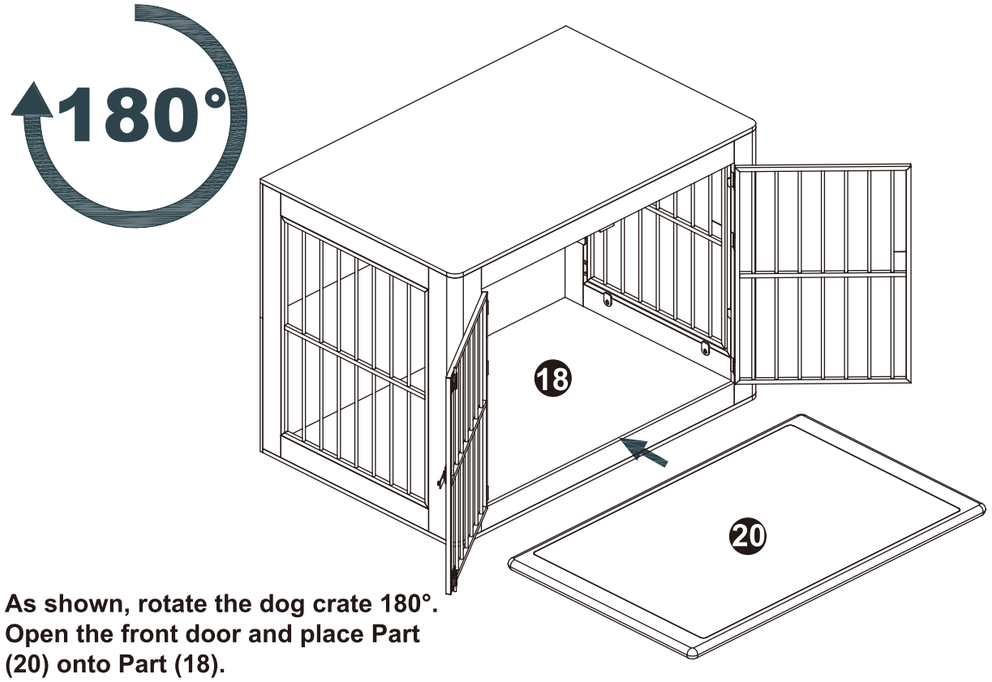

As shown, rotate the dog crate 180°. Open the front door and place Part (20) onto Part (18).

Email : service@grandtunnel.com

EN

Step 23

Step 1

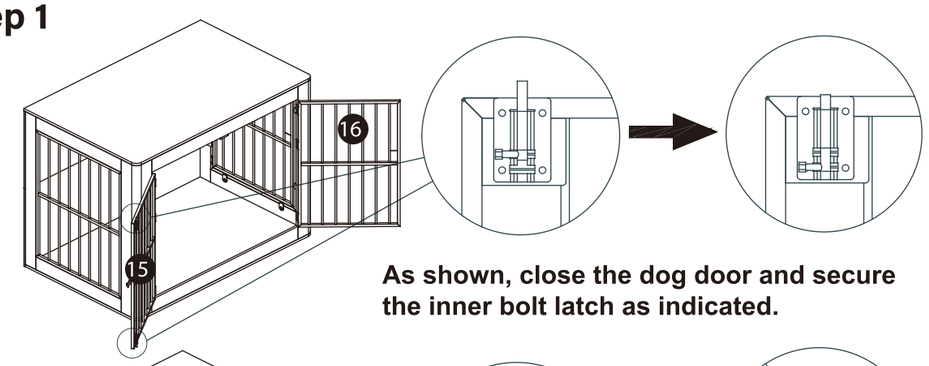

As shown, close the dog door and secure the inner bolt latch as indicated.

Step 2

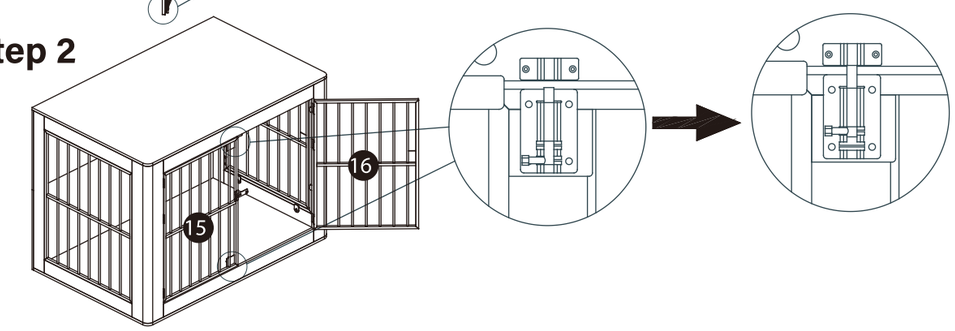

Step 24

Step 1

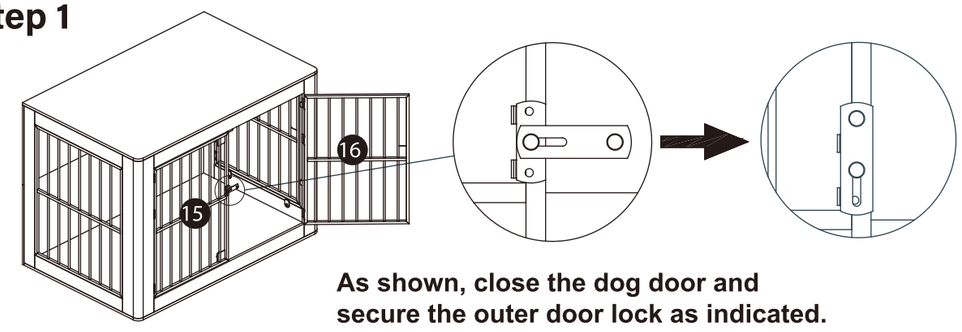

As shown, close the dog door and secure the outer door lock as indicated.

Step 2

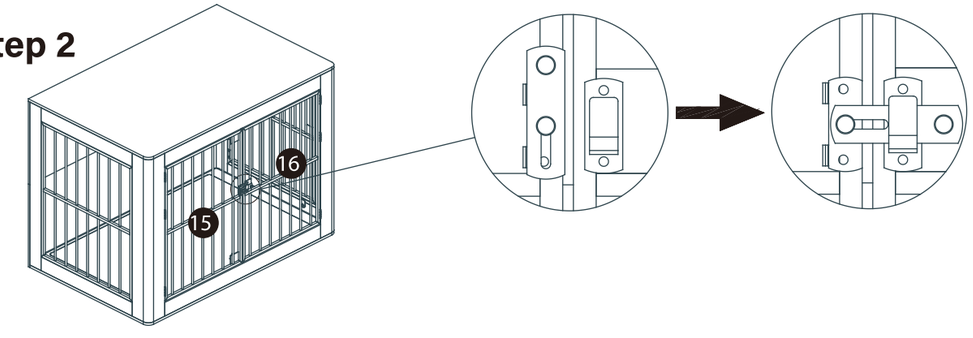

Email : service@grandtunnel.com

EN

Step 25

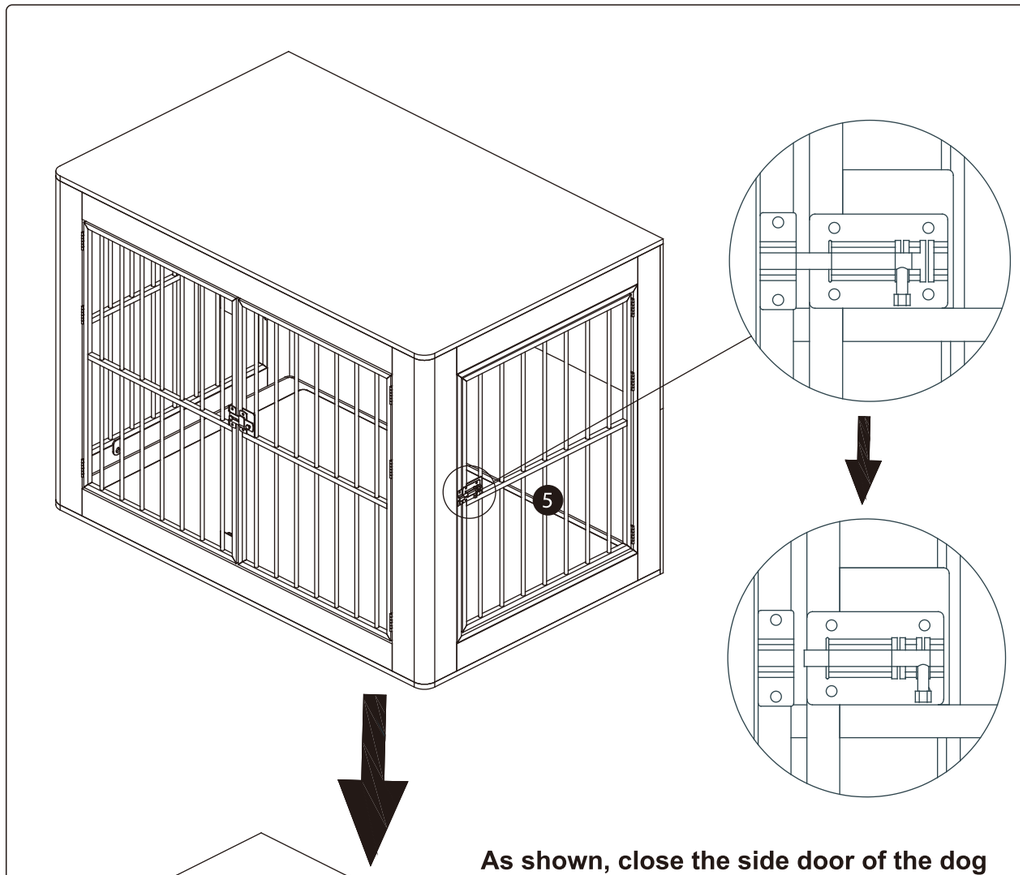

As shown, close the side door of the dog crate and secure the bolt latch as indicated.

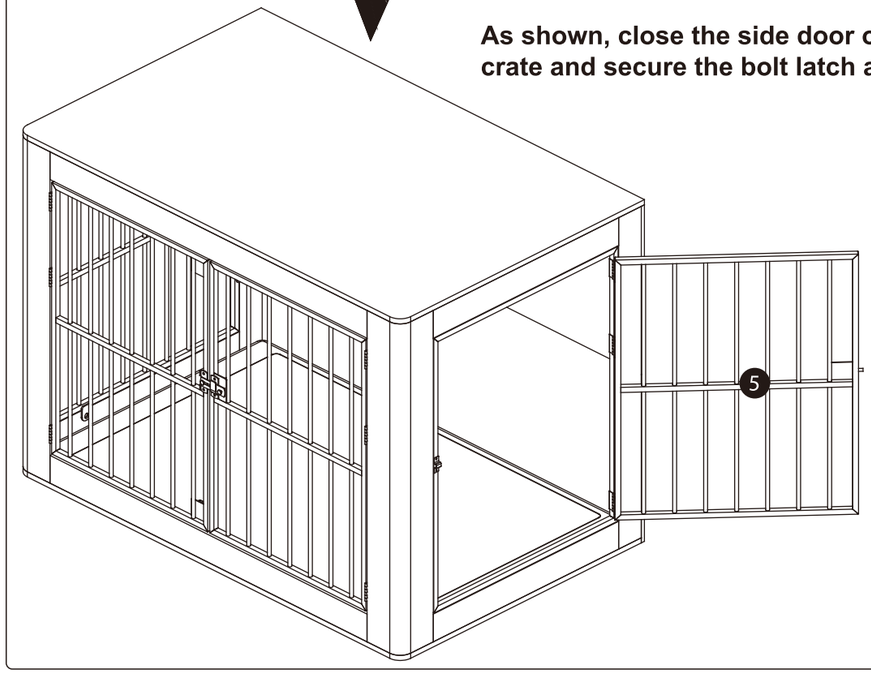

Email : **service@grandtunnel.com**