Assembly Instruction

Dressing Table
Thank you for purchasing this quality product.
Please check all packing material carefully which may have come loose inside the carton during shipment.

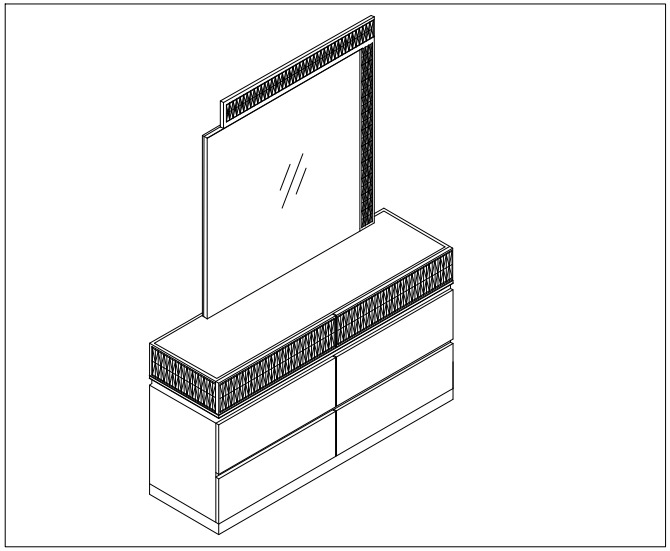

PART LIST

No	Description	Qty
1	Dressing Table	1pc
2	Mirror	1pc
3	Mirror Support	2pcs

HARDWARE LIST

No	Description	Qty
A	JCBC M6 x 35mm	8pcs
B	Lock Washer	8pcs
C	Flat Washer	8pcs
D	Power Adaptor 12V-1A	1pc

Step : 1

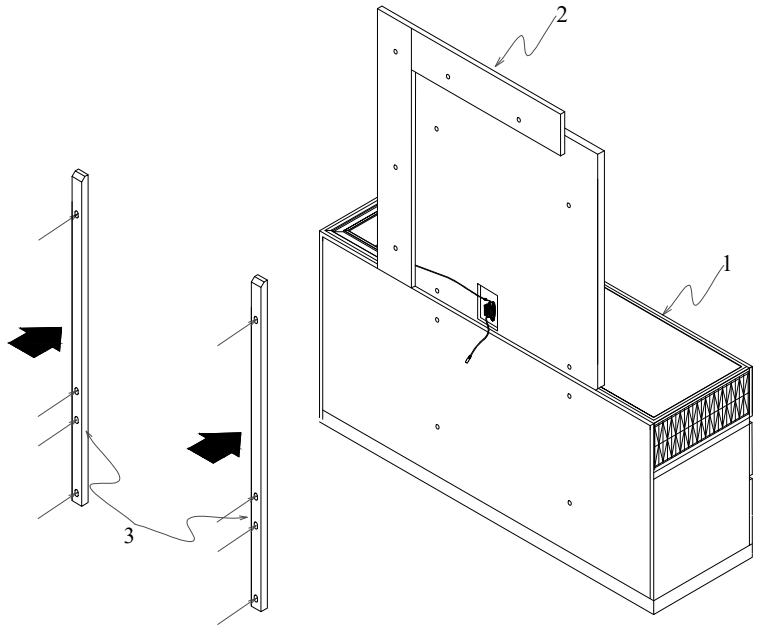

Step : 2

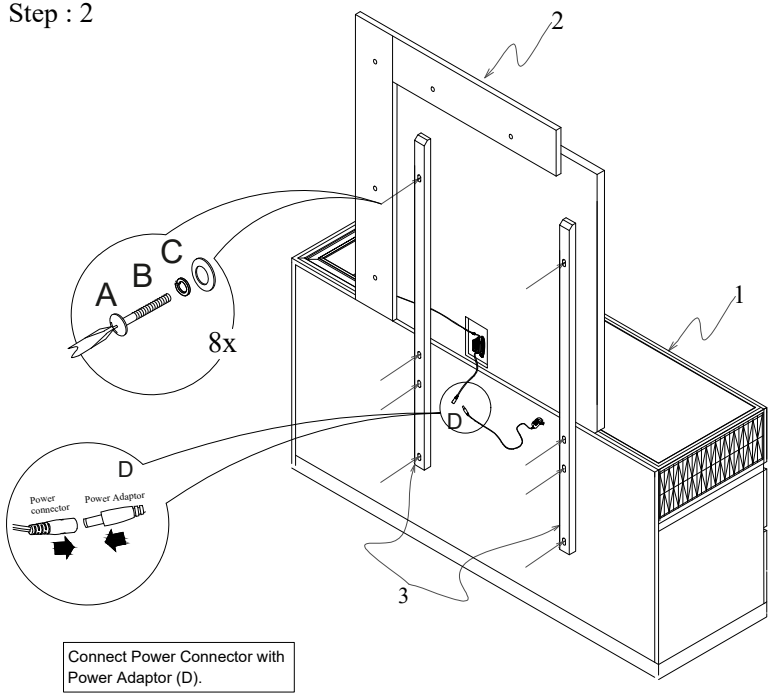

Connect Power Connector with Power Adaptor (D).