outline drawing

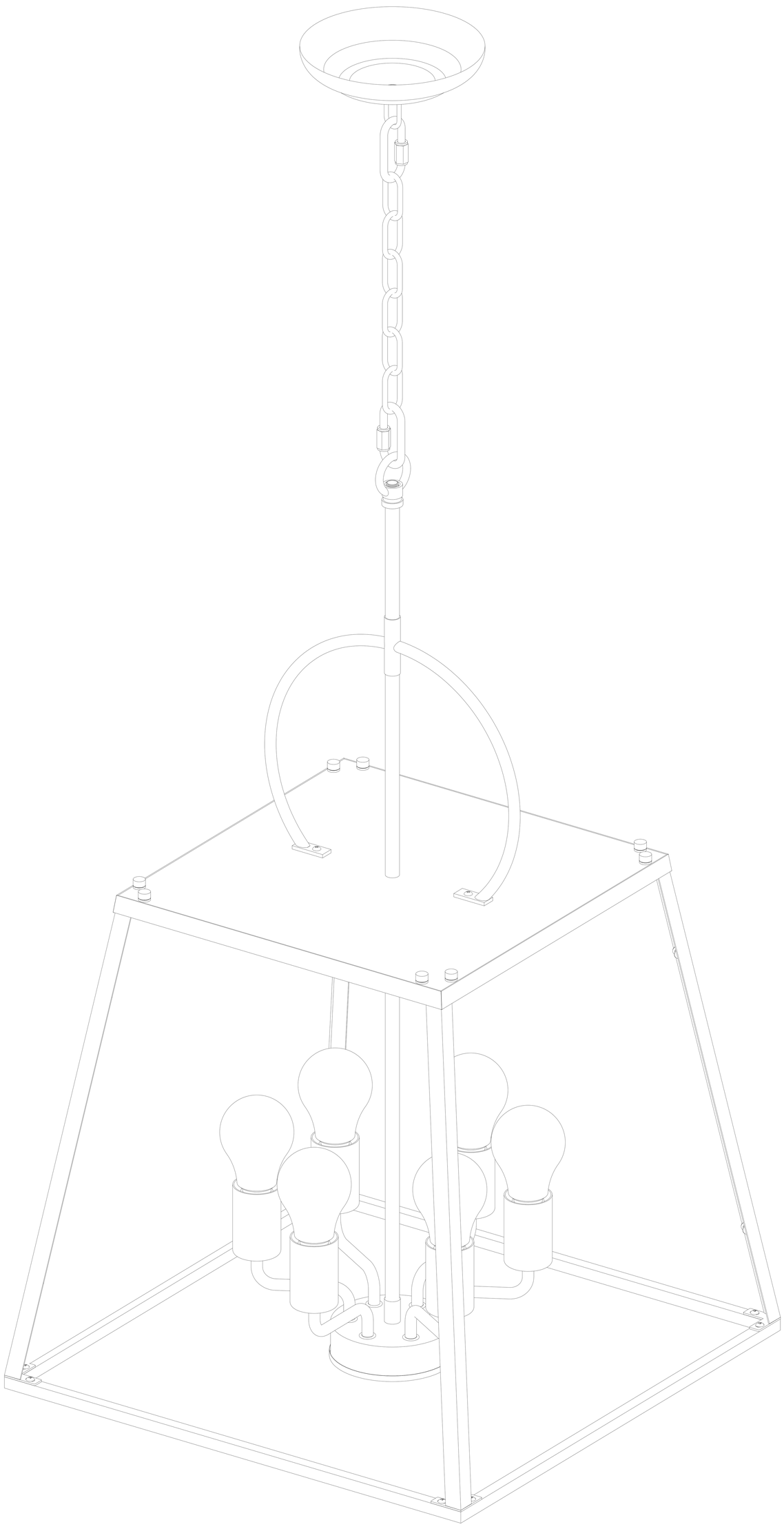

Model:

Technical Data:
Supply Voltage:110-120V
Bulb Type:E26Max40Wx6PCS
(NOT included)

CAUTION

- Before installing the lighting fixtures, please check the insulation of the wires for any cuts, wear, or possible damage during transportation。If the wires are defective, do not attempt installation 。
- In some countries, electrical installation work can only be carried out by authorized electrical contractors。Please contact the local power department for advice。

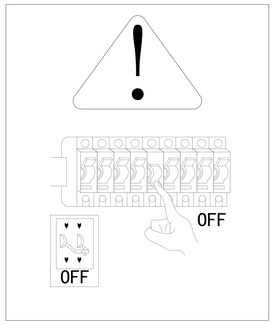

IMPORTANT Before starting the installation work, please make sure to cut off the power supply to the circuit。

IMPORTANT Keep children away from the installation process 。

Required tools (not included):

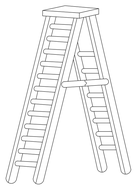

Ladder

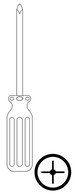

Phillips screwdriver

pincers

Required tools (including):

expension screws

glove

The hardware kit provides:

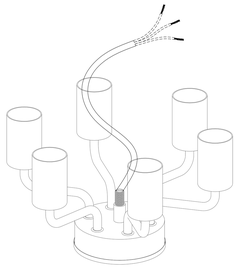

Lights, ancient

Mounting Screw

Hanging board screws

Hanging Loop

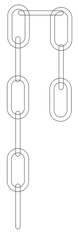

Canopy

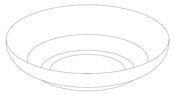

tray

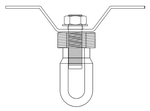

Mounting Unit

Cable Connector

Carabiner

Column -4pcs

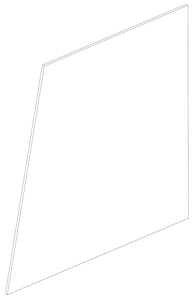

Glass sheets-4pcs

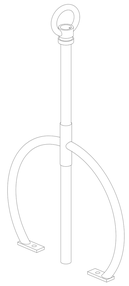

Middle pipe+welded bracket

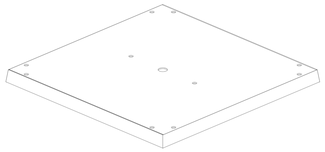

Joint solder pad

middle pole

Universal joint

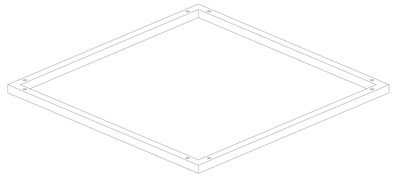

Welding frame

cable tie

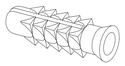

Gecko rubber stopper

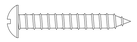

Self tapping screws

- The components displayed on each lamp may vary slightly

Step 1

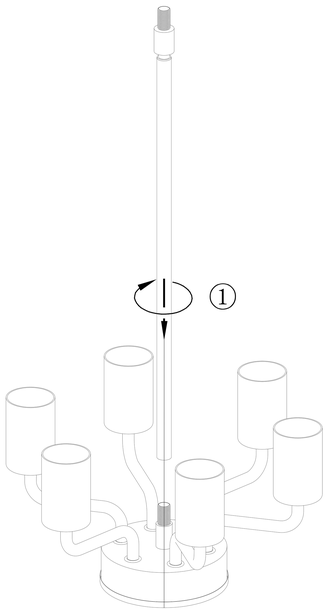

① Tighten the connection between the central pipe and the lamp, as well as the ancient connection。

Step 2

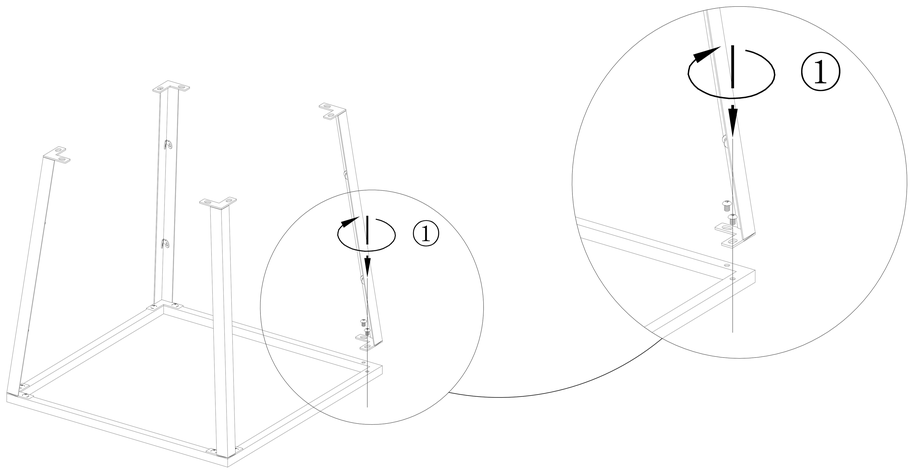

① Connect the screws through the holes on the column and the threaded holes on the welding frame, and tighten them. Follow this step for the rest。

Step 3

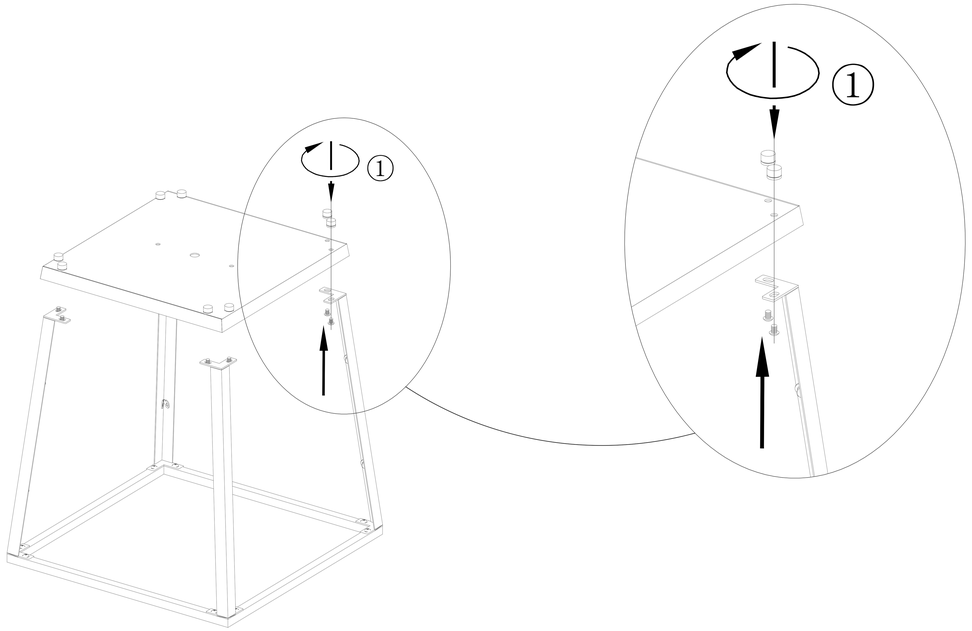

① Thread the screw through the hole on the column, then through the hole on the bonding pad, and finally connect the tooth socket to the screw and tighten it. Follow this step for the rest。

Step 4

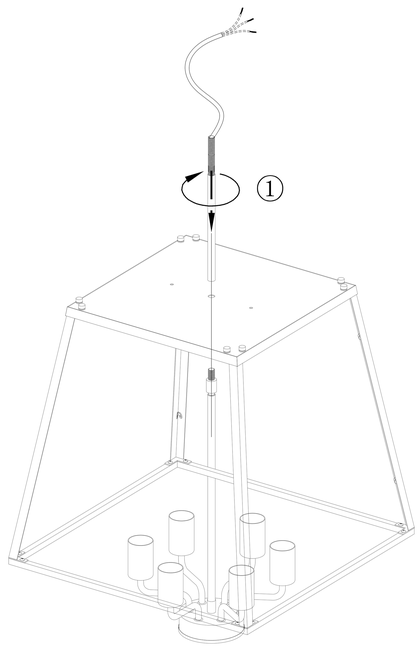

① Thread the tooth tube on the middle tube through the hole on the bonding pad and connect it to the middle tube, then tighten it。

Step 5

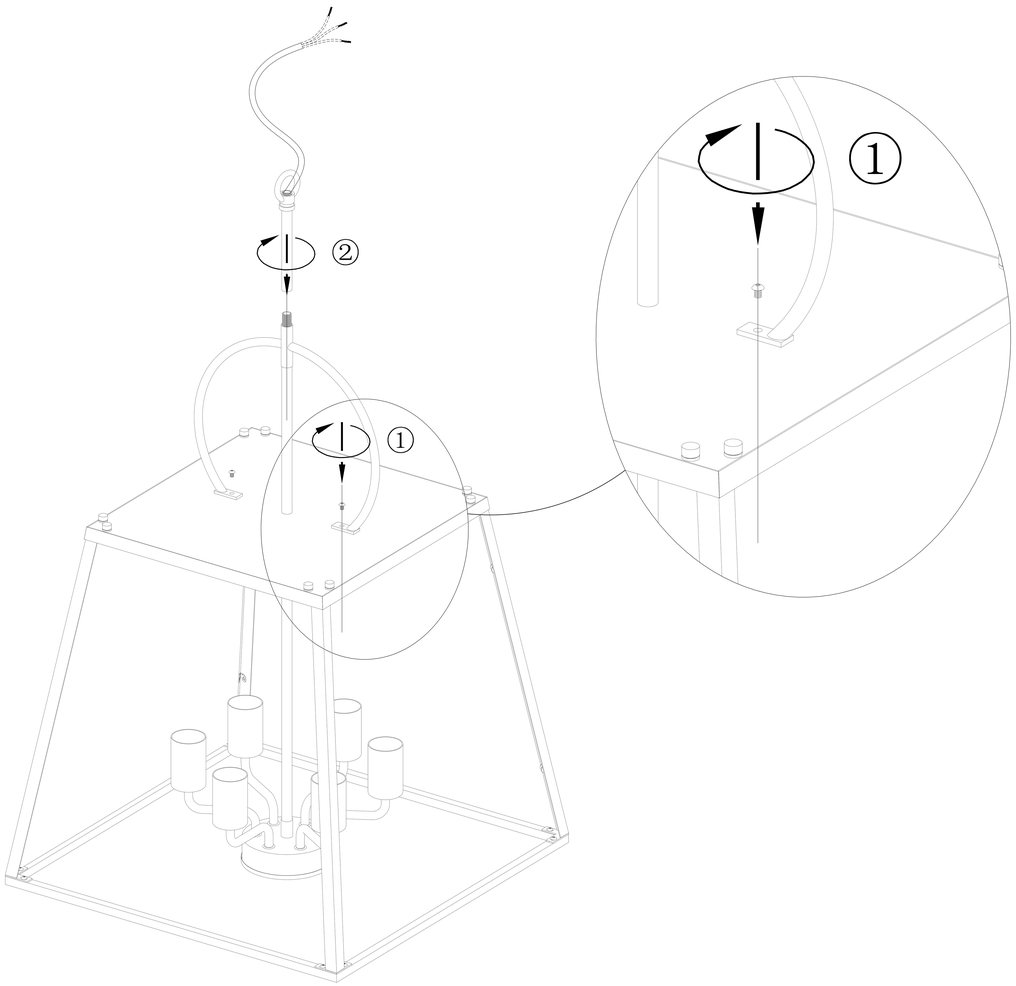

① Thread the screw through the hole on the welding bracket and tighten it to the teeth on the welding pad。

② Tighten the connection between the middle tube and the tooth tube on the lamp body。

Step 6

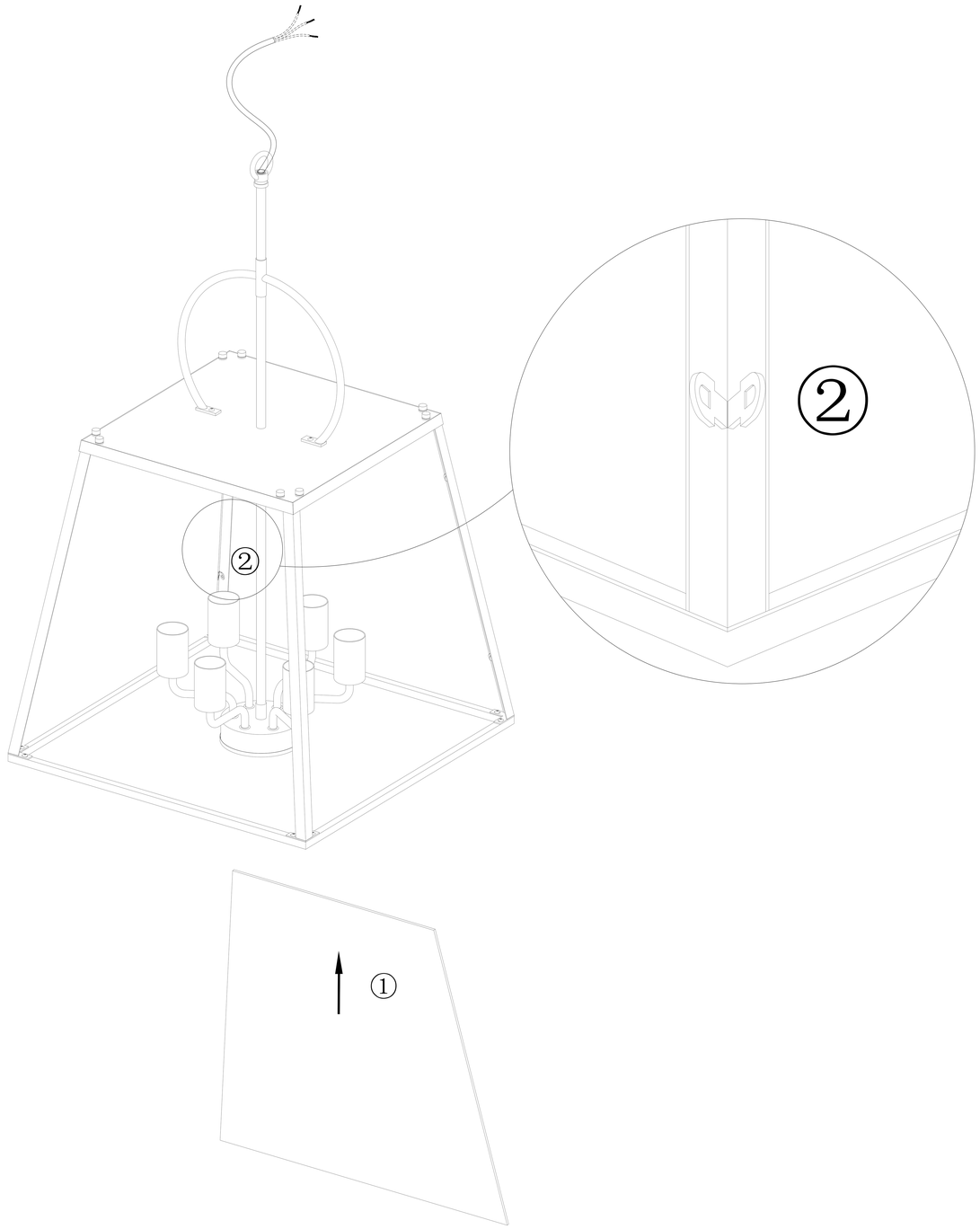

① Place the glass sheet from bottom to top and place it in the slot of the shelf。

② Bend the iron plates welded on the column to both sides to fix the glass。

Step 7

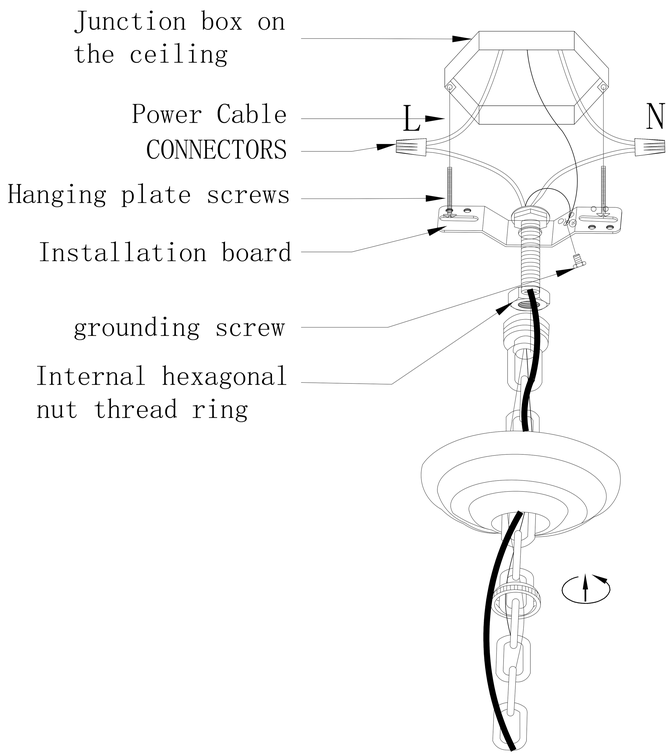

① Thread all the wires through the canopy and installation kit。

② Connect the power cable with two cable connectors。

③ Connect the grounding wire and tighten it with the grounding screw。

④ Install the fixing screws into the mounting plate, install the installation unit under the junction box, and tighten with two mounting screws。

⑤ Fix the canopy in place using a suspension ring. Tighten the screw ring and hex nut with a wrench to tighten the hex nut。

⑥ Tighten the fixing screws on the rain shelter holes。

⑦ Swivel the lid onto the canopy。

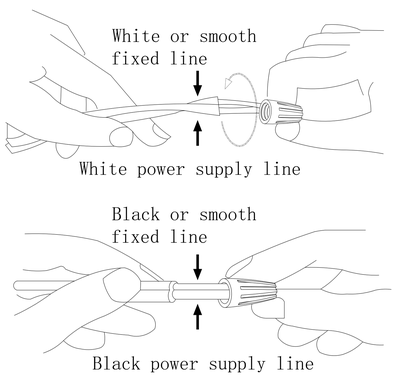

Connect the black or red wire (with an L sticker on the wire) to:	Connect the white wire (with N stickers on the wire) to:
black	white
Parallel lines - pti&l (circular and smooth)	Parallel lines - spri&l (square and ridge shaped)
Transparent, brown, gold or black (without tracer)	Transparent, brown, gold or black (with tracer)
Copper core insulated wire (excluding GREEN)	Silver conductor insulated wire (excluding GREEN)

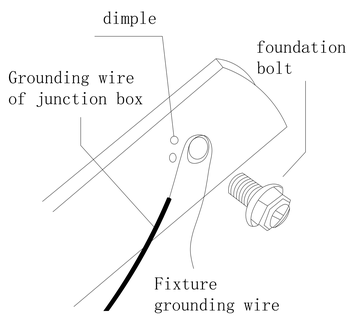

Step 8

Kind reminder:Before installing the glass panels, please clean them thoroughly 。

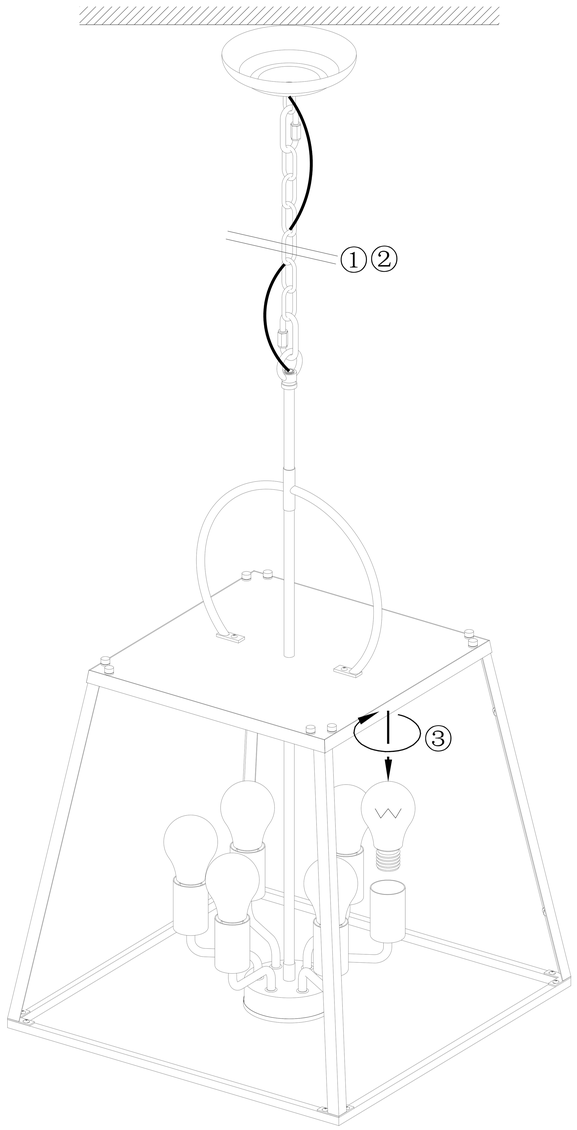

①② This depends on the height of your ceiling and the desired suspension length. You can measure the chain and adjust the locking buckle to achieve the desired chain length。

③ Tighten the light bulb (E26 maximum 40W, not included)。