# DREAMS IDEA

Instruction Manual



DREAMS IDEA

NO.SF000(2/3/3F)

# ABOUT US

DREAMSIDEA IS A ONE-STOP HOME

FURNISHING AND SERVICE COMPANY BASED IN USA.

WE ARE DEDICATED TO BRINGING YOUR DREAM HOME TO LIFE.

OUR SERVICES COVER FROM DESIGN, PRODUCTION,

DIRECT SELL, STORAGE, AND TRANSPORTATION.

IF REALITY IS THE NEAR SHORE

AND IDEALISM THE FAR SHORE,

DREAMSIDEA

AS THE FERRY BETWEEN THEM,

EAGER TO ACCOMPANY YOU ON A JOURNEY

TO YOUR IDEAL HOME.

## Please Note:

Hey there! You might notice the chair on the cover isn't an exact match. That's because this manual works for the whole family of chairs underneath. Grab your tools, follow the steps, and have fun adding a new member to your furniture family!



SF0003 (Series)



SF0003F (Series)



SF0003(Patterned Series)



SF0002(Series)

ITEM NO.SF000(2/3/3F)

# WARRANTY

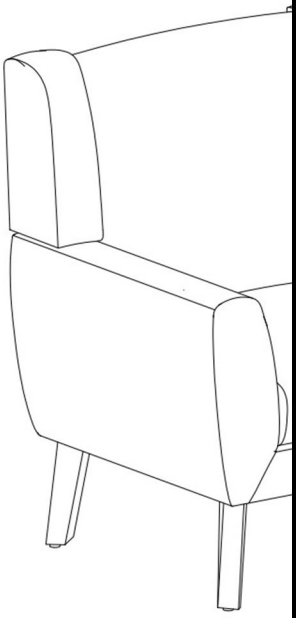

We strive to offer high quality product and we also try our best to satisfy each customer that order from us, no matter on products or services as needed. Each customer receives a record of their order, such as the order number or item receipt. For any items that are out of warranty period, you may still be able to purchase the replacement parts from our company if they are available.

Are you having difficulty
with assembly? Missing parts?
Please contact us : info@firstopintl.com
Tel:(562)-781-3327
send an email with your order No. to us
For return, please check the return policy with the retailer or platforms you bought from.
Appreciate your purchasing from us.
Pop up your life by our furniture !

# MAINTAINANCE AND WARNING

Please read the manual thoroughly before you start installing.

Please keep the product away from sharp object.

Packaging and small parts may have chocking hazard, please keep them away from children and pets.

Please clean the product according to each clean code, check the product description for more information.

Please keep the product away from fire.

If you have any other questions, please contact us, we will be glad to help you out.

If the product is placed under direct sunlight, the pattern or color might fade away overtime.

Check the product periodically to make sure everything is secured and tightened.

Always use proper tools for installation.

Do not jump on the product.












# PRDOUCT DESCRIPTION

Timeless Style: Mid-century modern design with tufted waffle stitching for elegance.

High-quality Material: Sturdy birch wood legs with a polished finish.

The armchair is simple and elegant, a perfect combination of comfort and modern design, indulge in various indoor decorations and spaces.

Easy to Assembly: Armchair is easy to assembly, equipped with a clear to assembly instruction. Integrated seat cushion, fixed position with

Upholstered in breathable, soft linen fabric for timeless style and comfort.

# EXPLODED VIEW

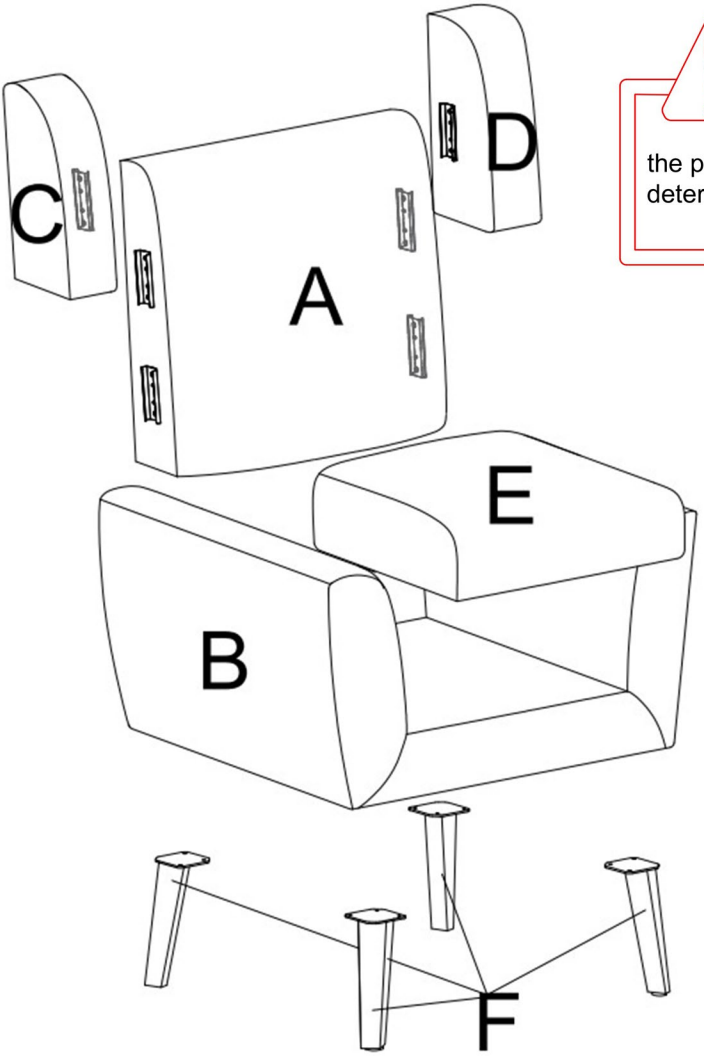


the product's left and right are determined by sitting posture

# PARTS

A*1



Backrest

B*1

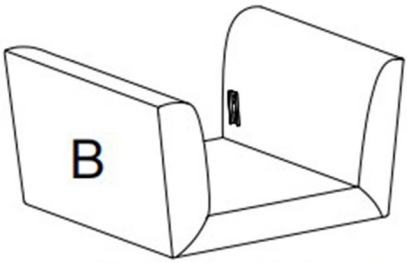


Seat frame

C*1



Right wing

D*1



Left wing

E*1

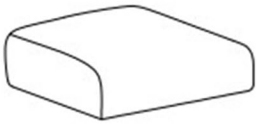

Seat cushion

F*4



Legs

# HARDWARE

## TOOL LIST

NOTE: Designated with (★) We provide additional spare parts in the hardware package

| ①*12 | ②*1 |
| --- | --- |
|  | 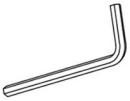 |
| ★ M8*20mm Bolts | M8 Allen key |

Please make sure all hardware&packing material fitting the list. Especially some small accessories may be missing during transportation. Please contact us if you have any question.

# step 1

Unzipp the zipper on the bottom of the seat frame (B) and take out both wings (C & D) of the backrest.

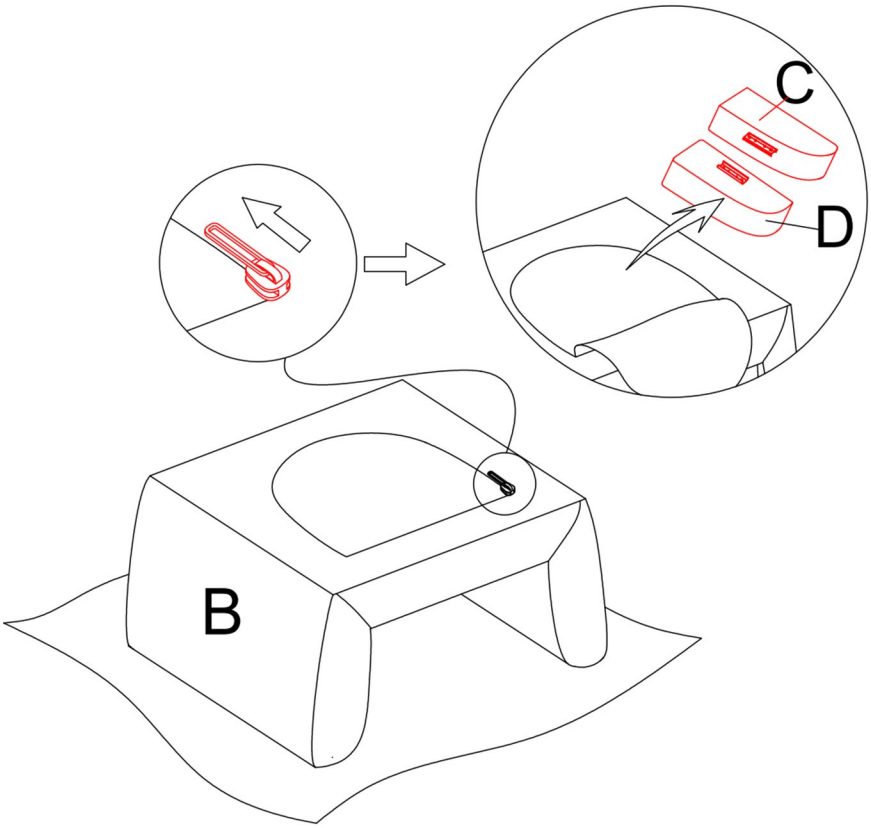

# step 2

Install the back (A) onto the seat frame (B) by sliding the connectors into the slots on the seat frame as shown. Make sure all the connectors are correctly aligned before pushing down the back.

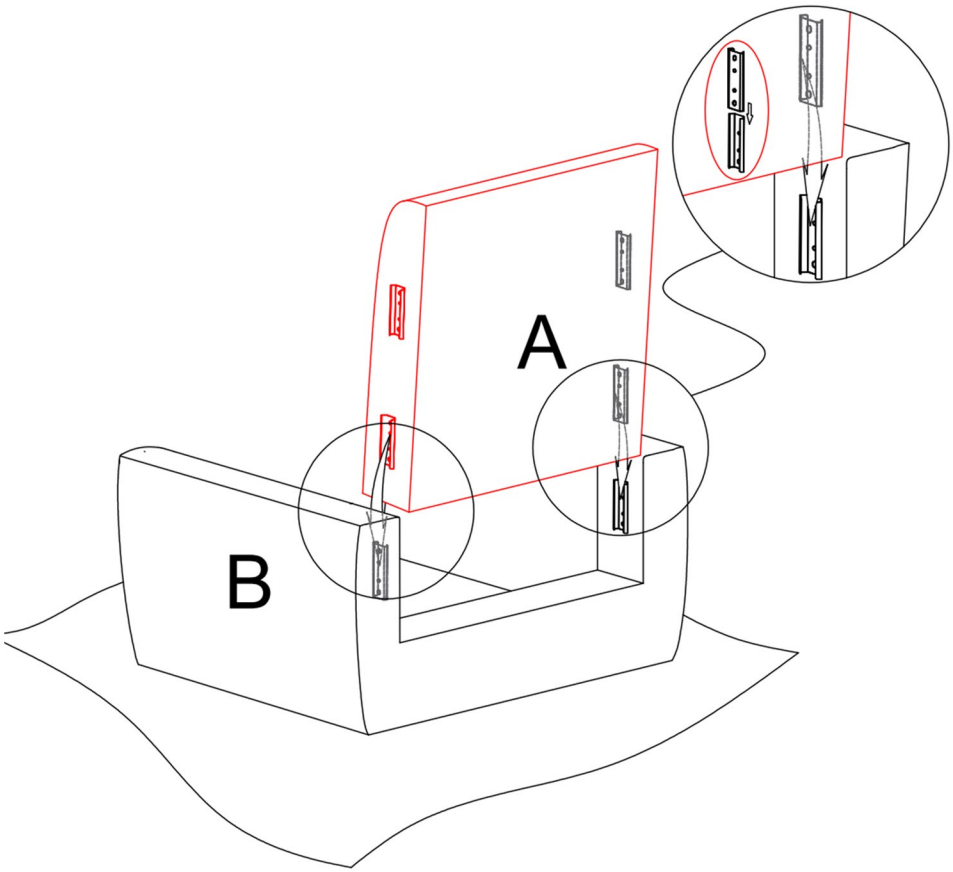

# step 3

Install the left wing (D) to the back (A) by sliding the connector into the slot on back as shown. Make sure it’s correctly aligned before pushing it down.

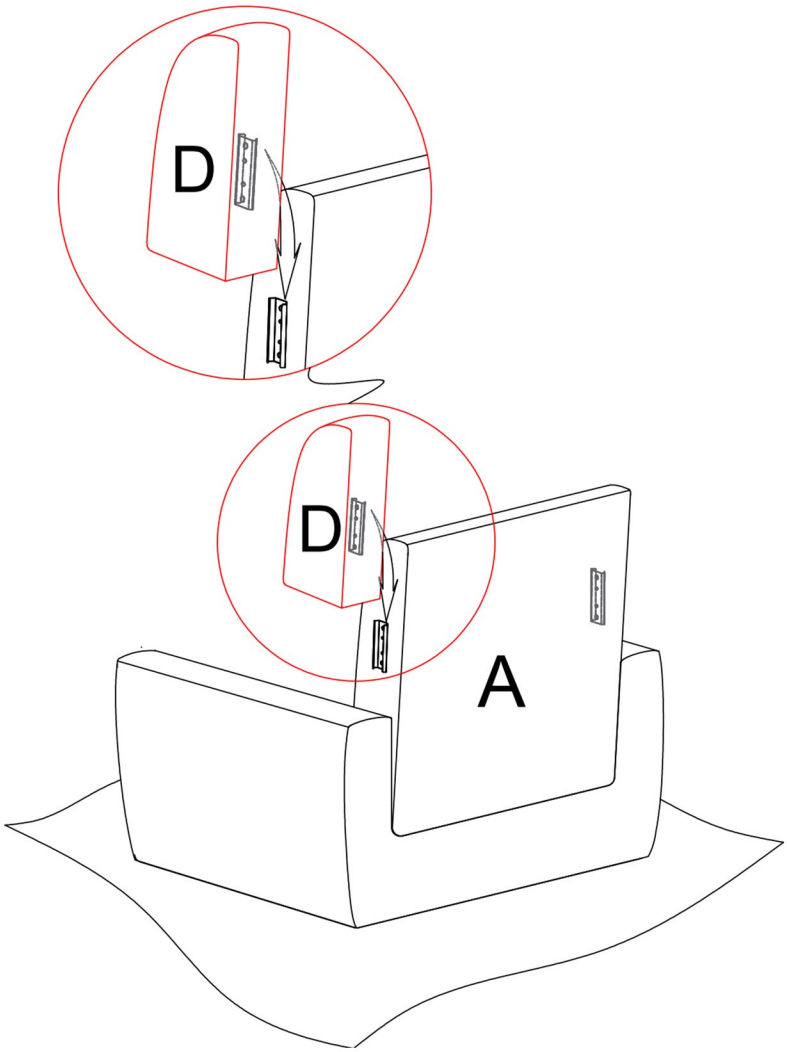

# step 4

Install the right wing (C) to the back (A) by sliding the connector into the slot on back as shown. Make sure it’s correctly aligned before pushing it down.

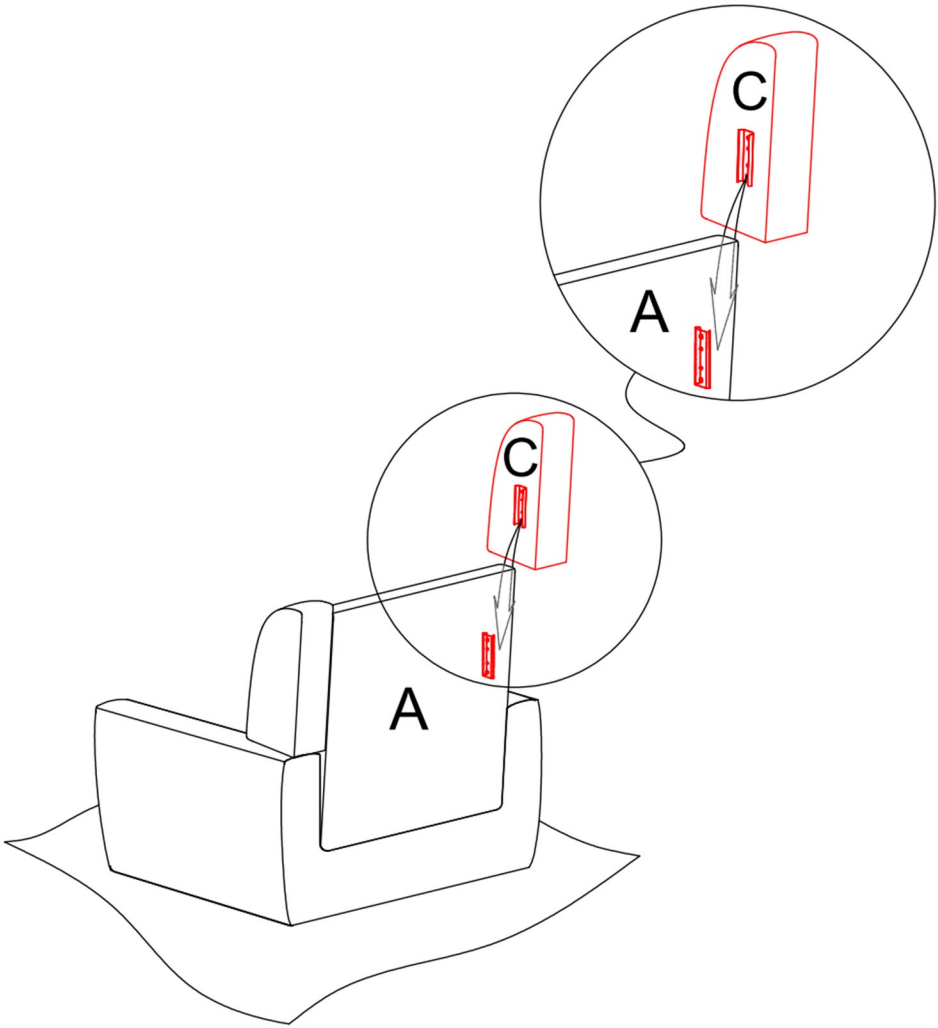

# step 5

Install all the legs (F) to the bottom of the seat frame (B) as shown. Use the allen wrench (2) provided to tighten the bolts (1). Make sure all the bolts are fully tightened before next step. Please follow this diagram to install the legs.

**Notice:**
We suggest tightening the bolts for 30-50% first, make sure the process is correct and bolt holes are aligned, then fully tightening them all.

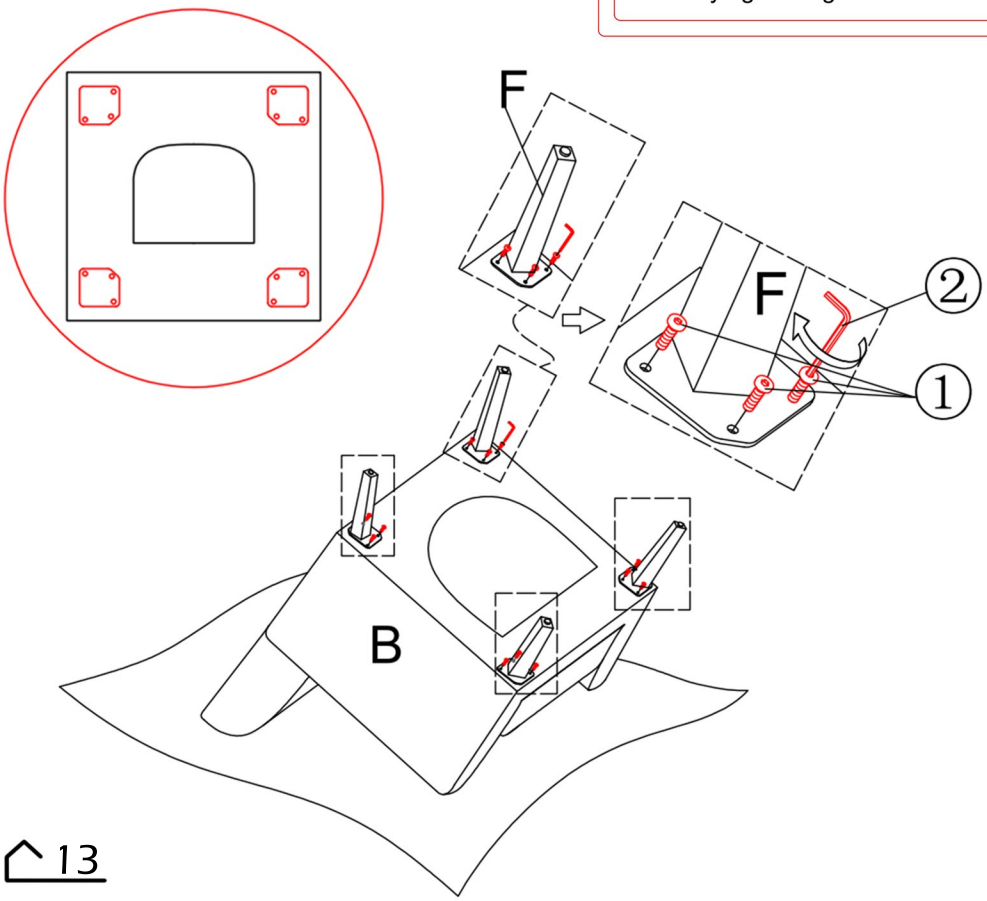

# step 6

Place the seat cushion (E) onto the seat frame (B) as shown.

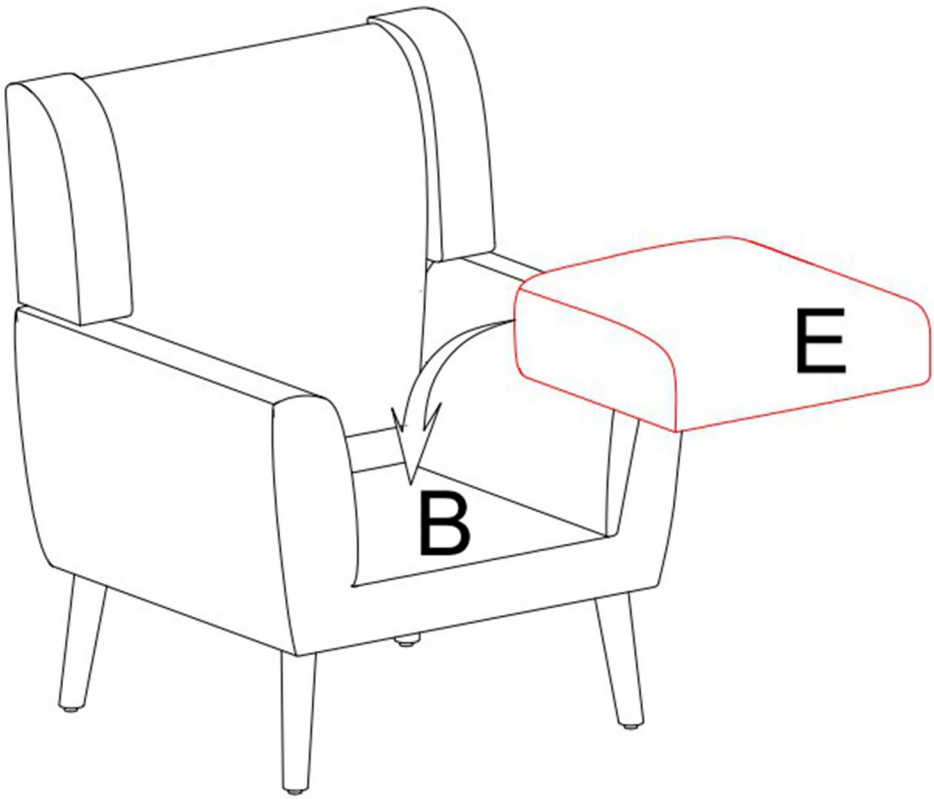

# step 7

Please note: the legs of the chair can be adjustable by twisting the leveler on the tip of the legs as shown, it can help you to use this chair on ground that is not flat, please check before you use the chair.

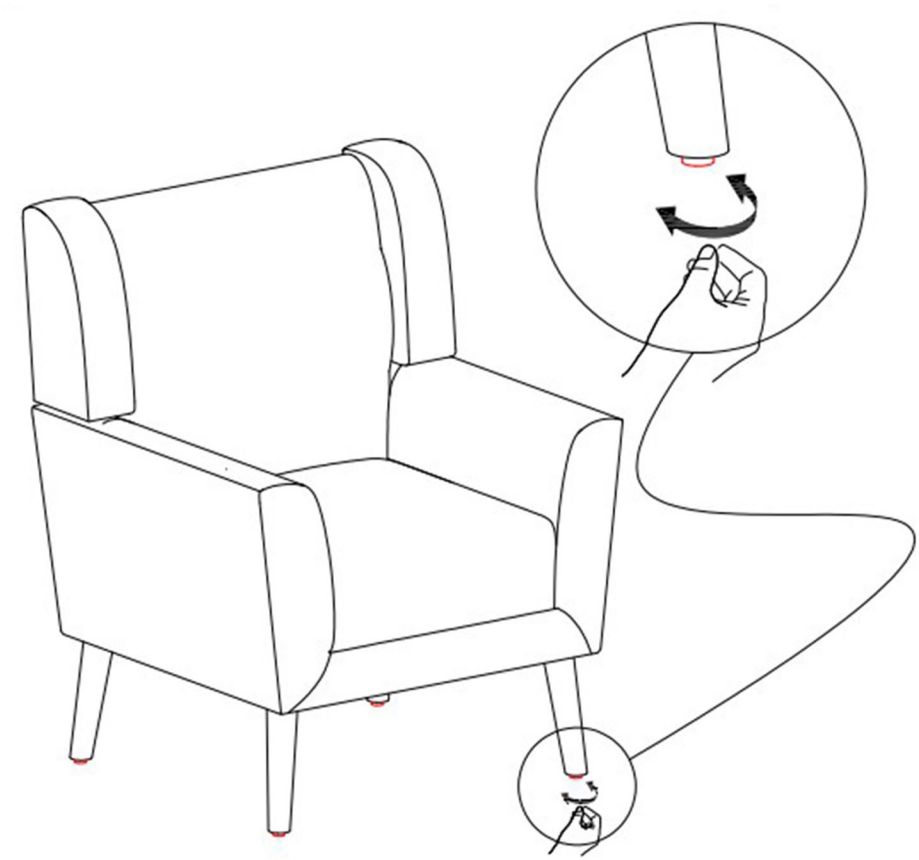

## SF0002(Series)







## SF0003(Series)







## SF0003(Patterned Series)







## SF0003F(Series)









# ASSEMBLY INSTRUCTIONS

Tel.(562)-781-3327

Please contact us:info@firstopintl.com

https://www.dreamsidea.com