ZEN YEMEK ODASI MASA/ZEN DINING ROOM TABLE

MONTAJ TALİMATLARI

ASSEMBLY INSTRUCTION

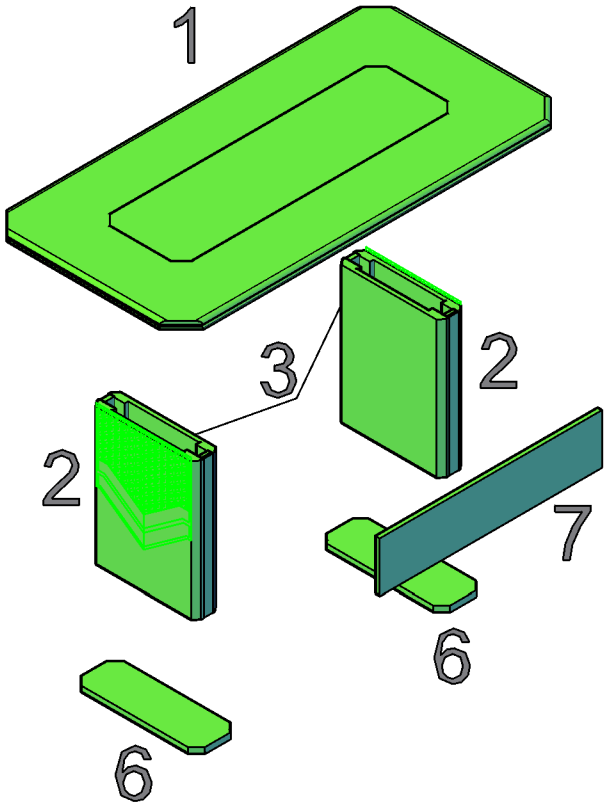

PARCA /PARTS	QUANTITY	PARCA /PARTS	QUANTITY
1-üst tabla	1		
2-ayak	2		
4-ayak taban	2		
5-ara kayıt	1		

AKSESUARLAR/ACCESSORIES



1-Y.MINIFIX GOVDE/MINIFIX (20 ADET)



4-PLS.KAVELA /PLASTIC DOWEL (4 ADET)



7-6*50 VIDA/SCREW (8 ADET)



2-Y.MINIFIX VIDA/BOLT (20 ADET)



5-MINIFIX KAPAMA/ PLASTIC MINIFIX (4 ADET)



3-4*30 VIDA/SCREW (8 ADET)



6-6.3*50 KABİN VIDASI/SCREW (16 ADET)