ASSEMBLY INSTRUCTIONS

DRESSER

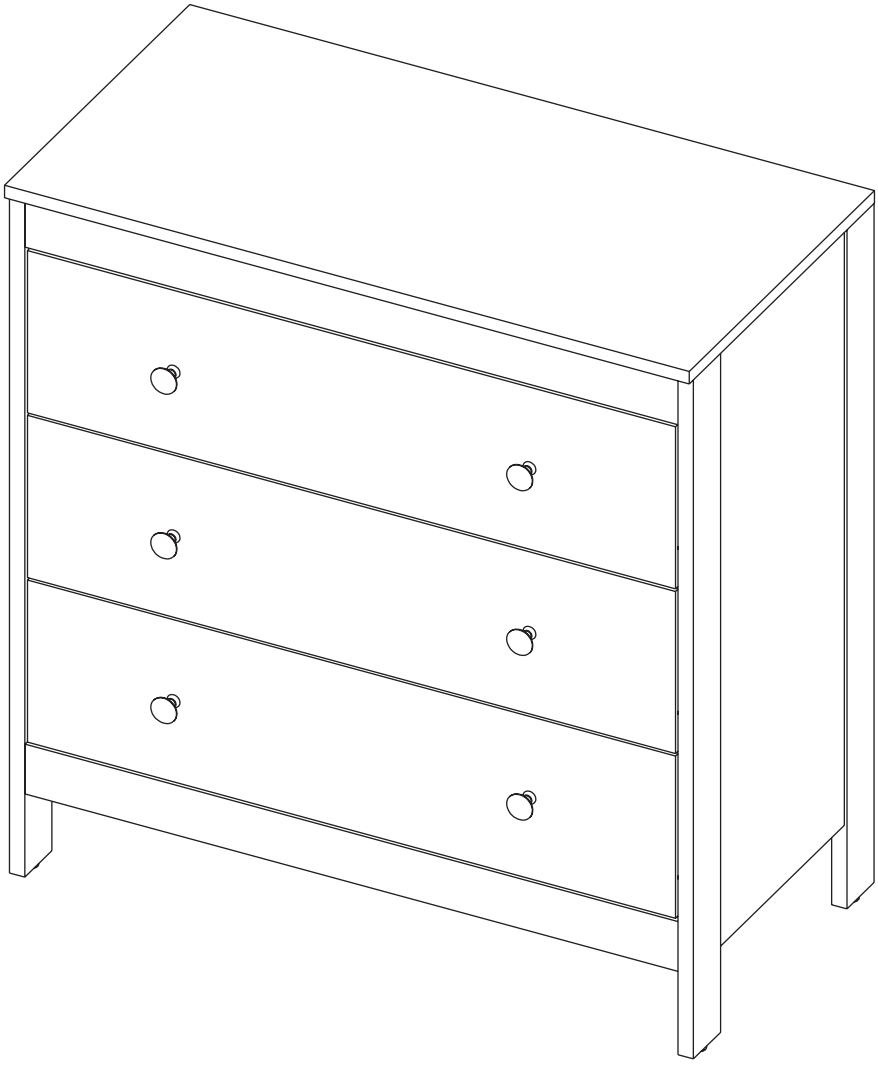

THIS FURNITURE MUST BE FIXED TO THE WALL

To ensure the safety of those using this closet, it is crucial to properly secure it to the wall using a wall anchor . This product includes the necessary items for fixing the furniture to the wall. However, it is important to note that incorrect installation or failure to use the tip-over device can result in serious injury or even death.
For this reason, we highly recommend that a professional installer handle the installation of the closet to the wall.

LOT N°

Index

What will you need?	2
Where should you start?	3
What's in the hardware bag?	4
How do the dowels and Minifix system work? (We also explain what they are)	5
Let's start assembling!	6
How much weight does your closet resist?	20
Our last recommendations for taking care of your closet	21

What will you need?

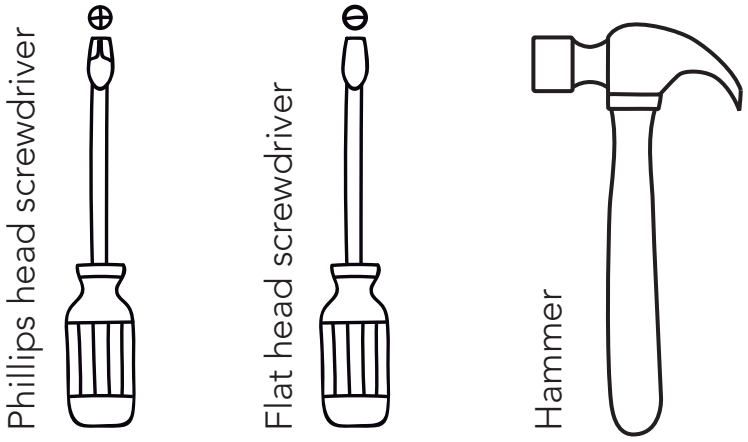

A flat, smooth surface. You can use the cardboard of the box or a rug.



An electric screwdriver isn't necessary, but it can make the work much easier :)

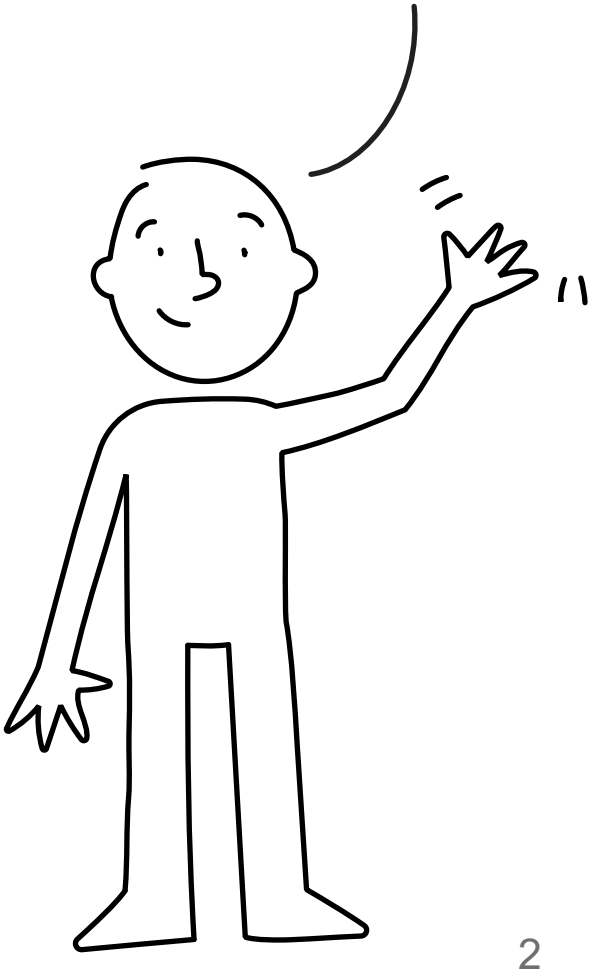

Where should you start?

This is so IMPORTANT!

Over the next few pages is the panel and hardware content for this closet. **Please make sure that the quantity of each one is correct, and that everything is in good shape.**

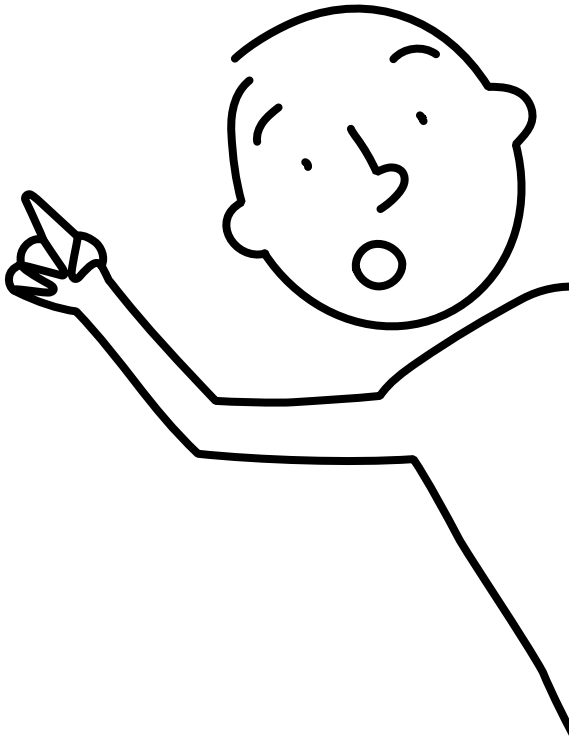

(When the cabinet is already assembled there's no warranty for this)

Panel quantity

A - x1	B - x1	C - x1	D - x1
E - x1	F - x1	G - x1	H - x1
I - x1	J - x1	K - x1	L - x1
M - x1	N - x3	O - x3	P - x3
Q - x6	R - x3	S - x3	T - x2

What's in the hardware bag?

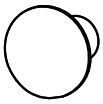 Knob **x6**	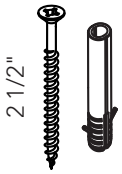 Wall anchor + screw **x2**	 Nail-on glide **x4**	 Minifix cam **x68**
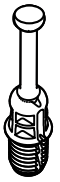 Spreading bolt **x68**	 Nail **x30**	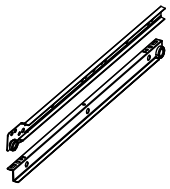 Slides + screws **x3**	 Cover taps **x70**
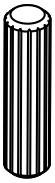 Dowel **x46**	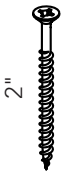 Drywal screw **x12**		



Be careful!, try not to lose anything from this bag, its content is necessary for assembling your closet.

How do the dowels and Minifix system work?

this is so important too!

Everytime you're using one of these connectors during the assembly, you should follow these same steps.

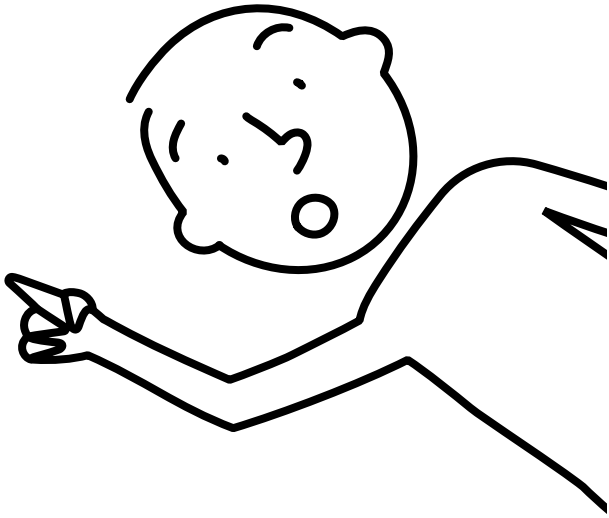

Wood dowels

They are little wooden cylinders.

1

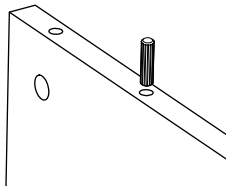

Put in the dowel inside the indicated hole and softly hit it until it's fully inside.

2

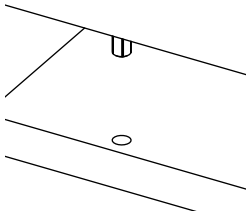

When joining two panels together, don't forget to gently hit the panels to adjust the joint.

Minifix system

It's a joint compound of two parts: a spreading bolt and a Minifix cam.

1

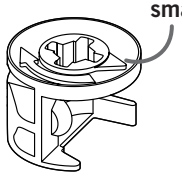

This is a Minifix cam. It has a little arrow on its upper surface.

2

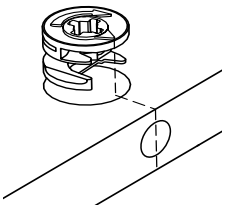

You should insert these cams with the little arrow pointing towards the drilling on the panel's edge (shown on the left).

3

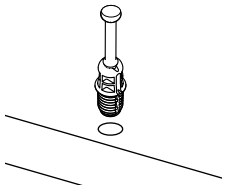

This is a spreading bolt. You should put it with the black plastic part facing down.

4

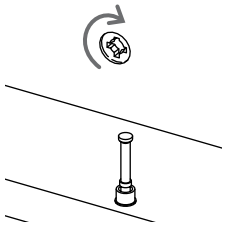

After joining two panels together you should turn the cams 180° with a phillips head screwdriver to adjust and secure the joint.

Let’s start assembling!

1

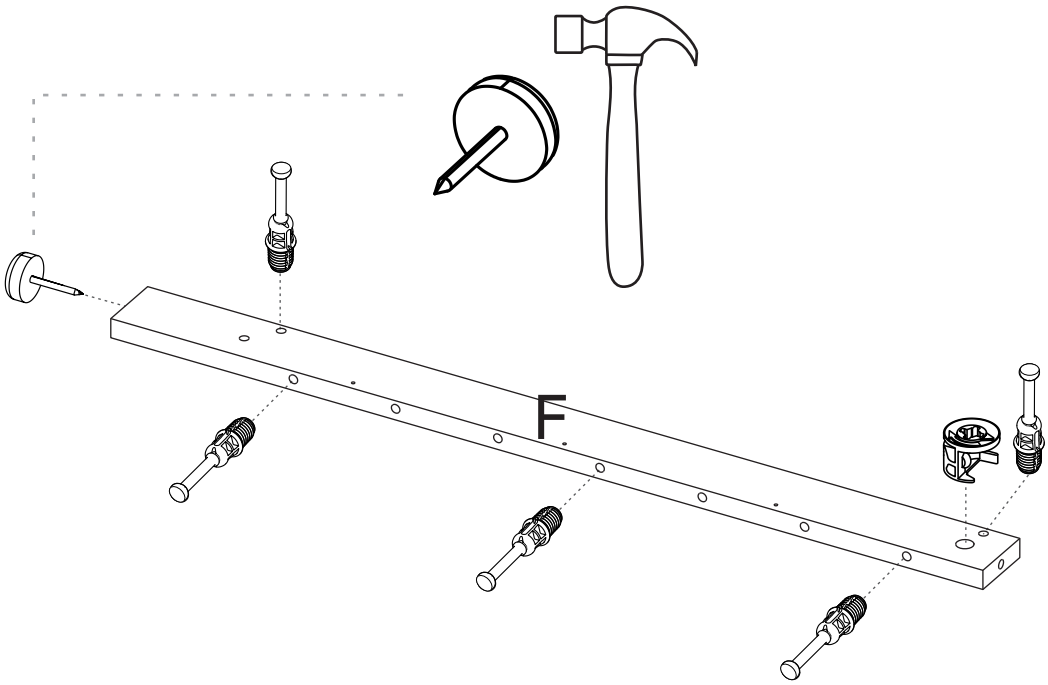

2

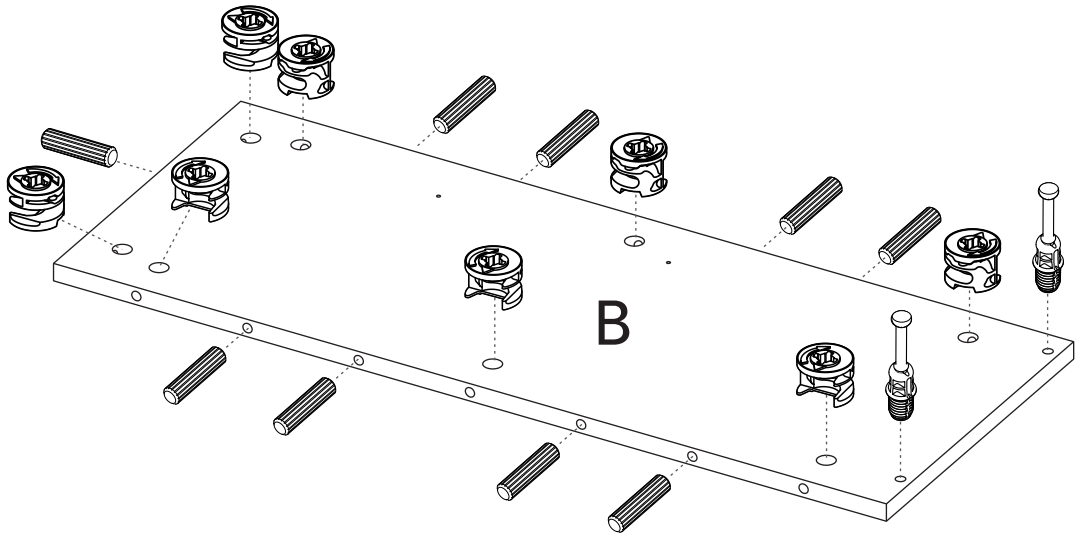

3

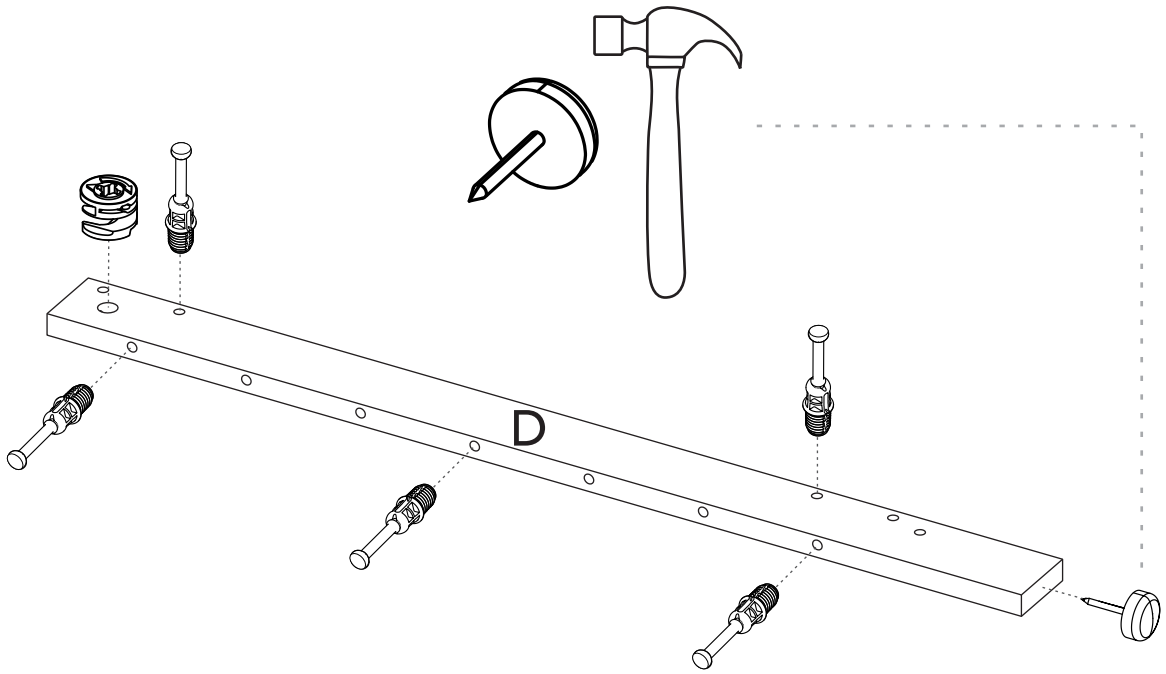

4

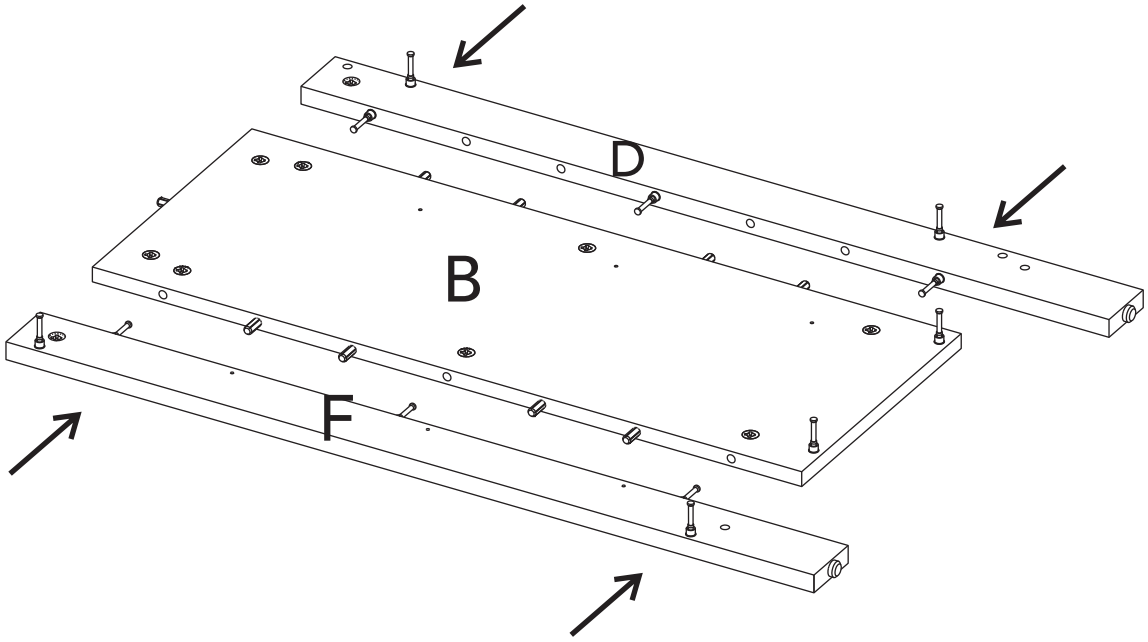

5 Drawer slides installation (apply for steps 5 and 20)

The wheel should go towards the front edge of the panel and facing down, like this:

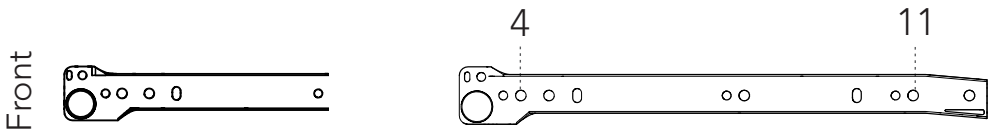

Para más información
escanea AQUÍ
Scan for more info

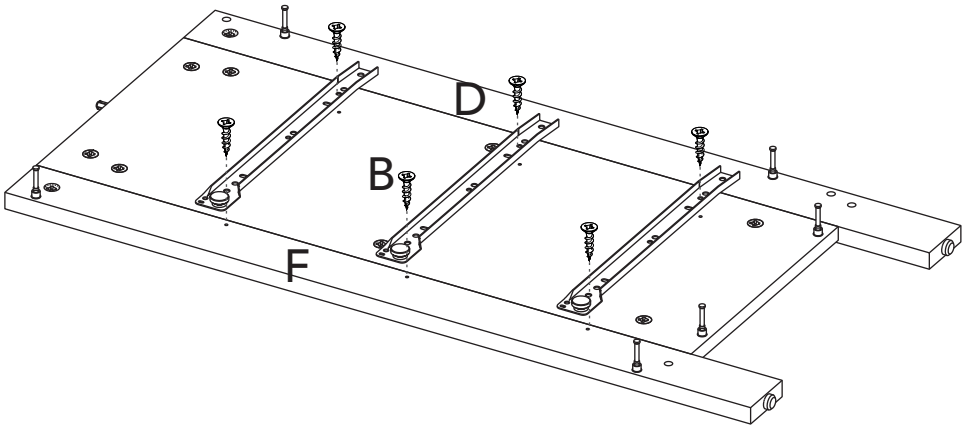

6

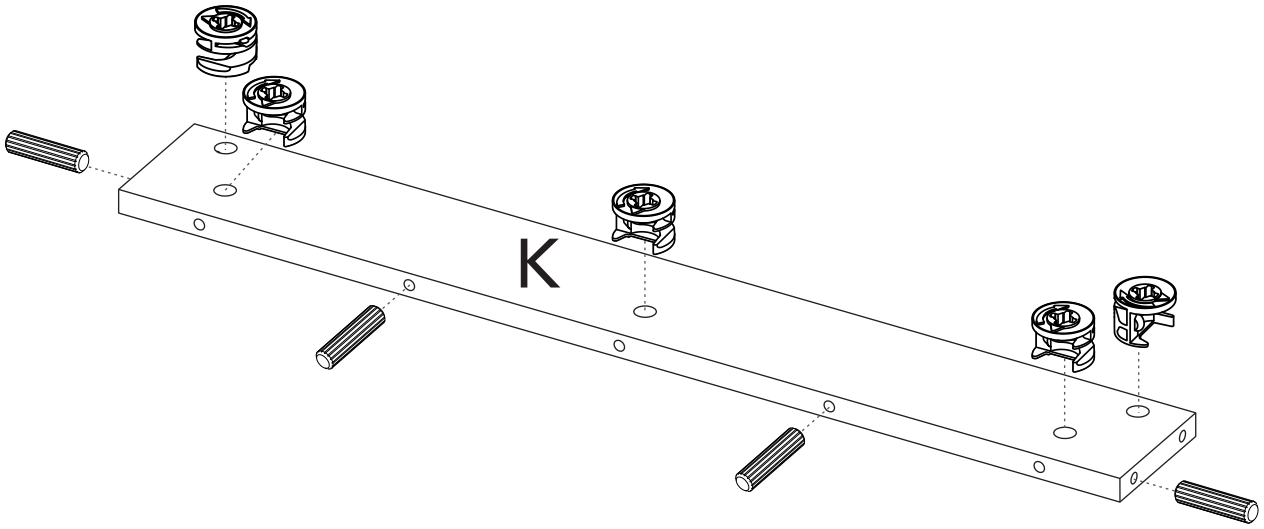

7

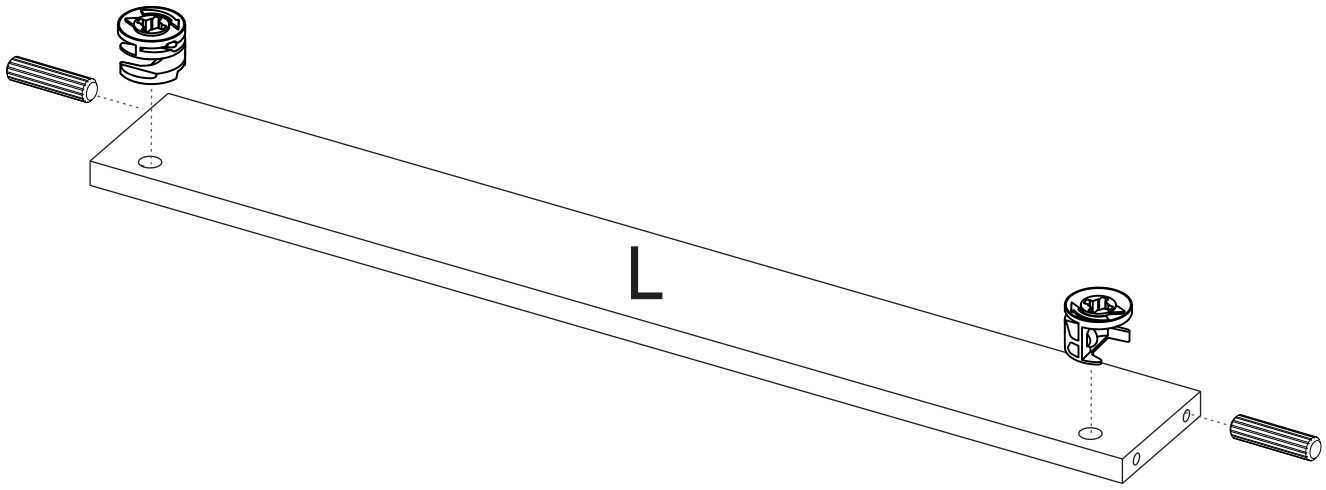

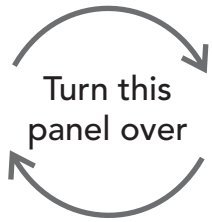

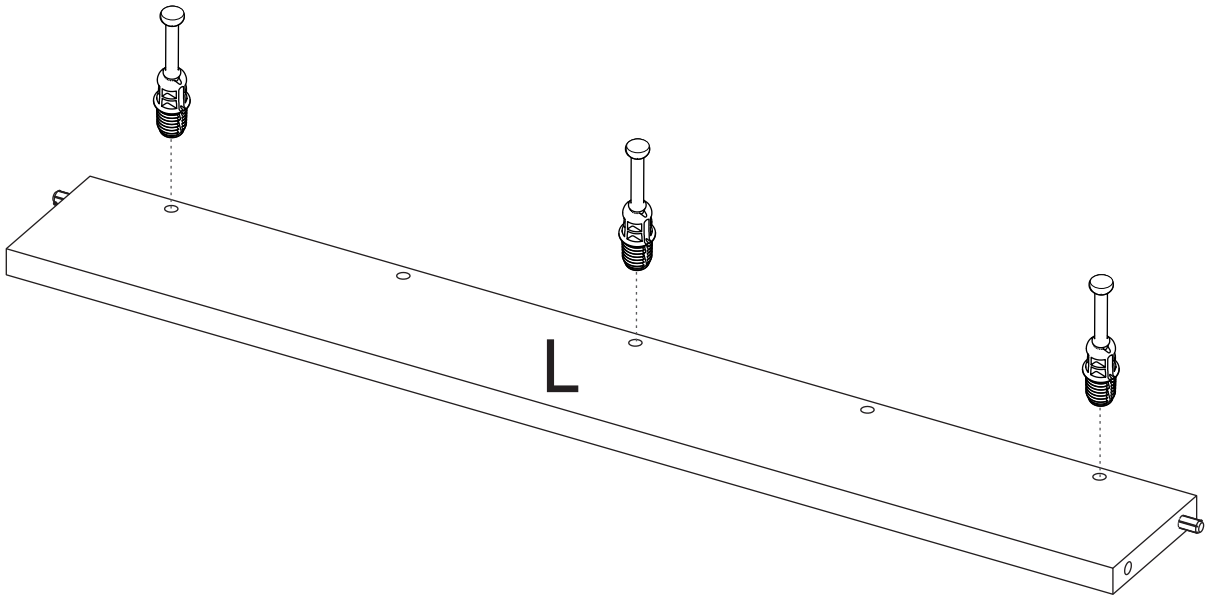

8

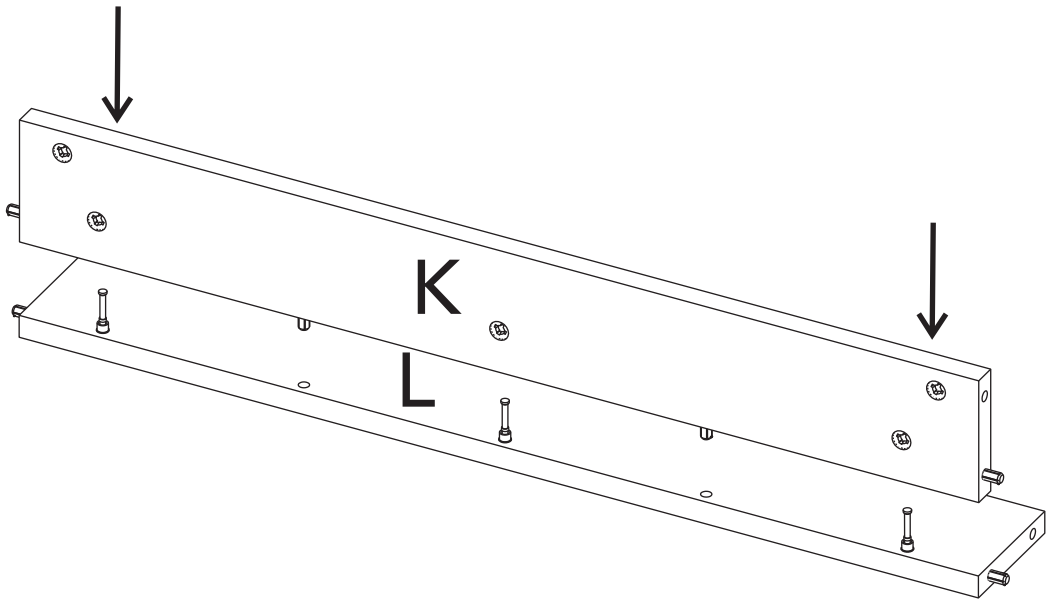

9

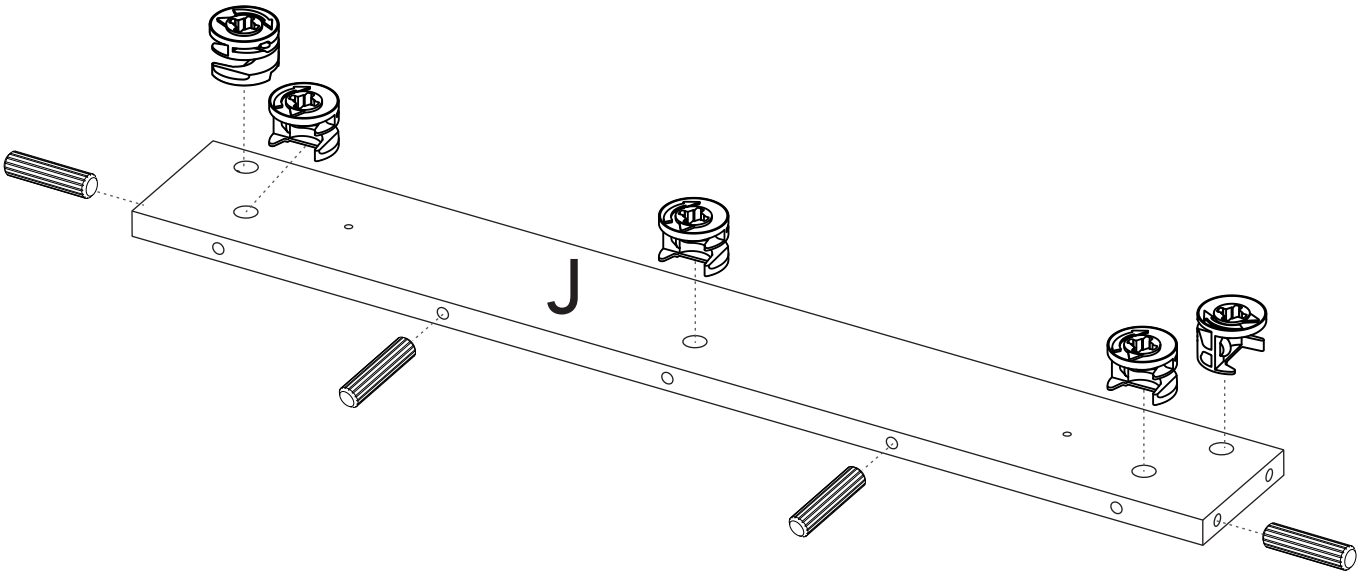

10

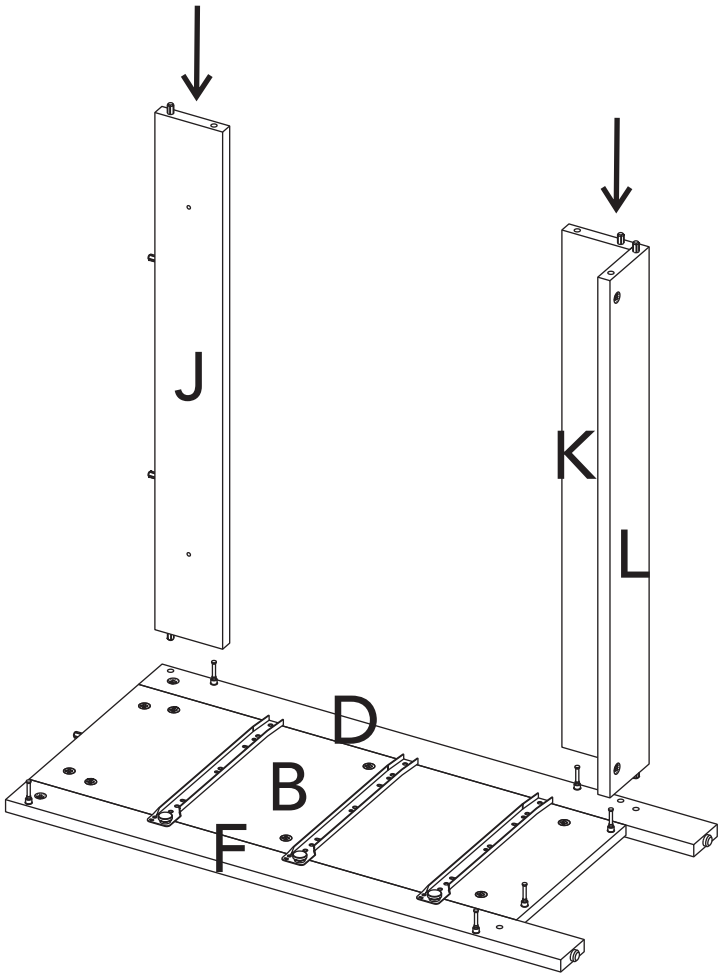

11

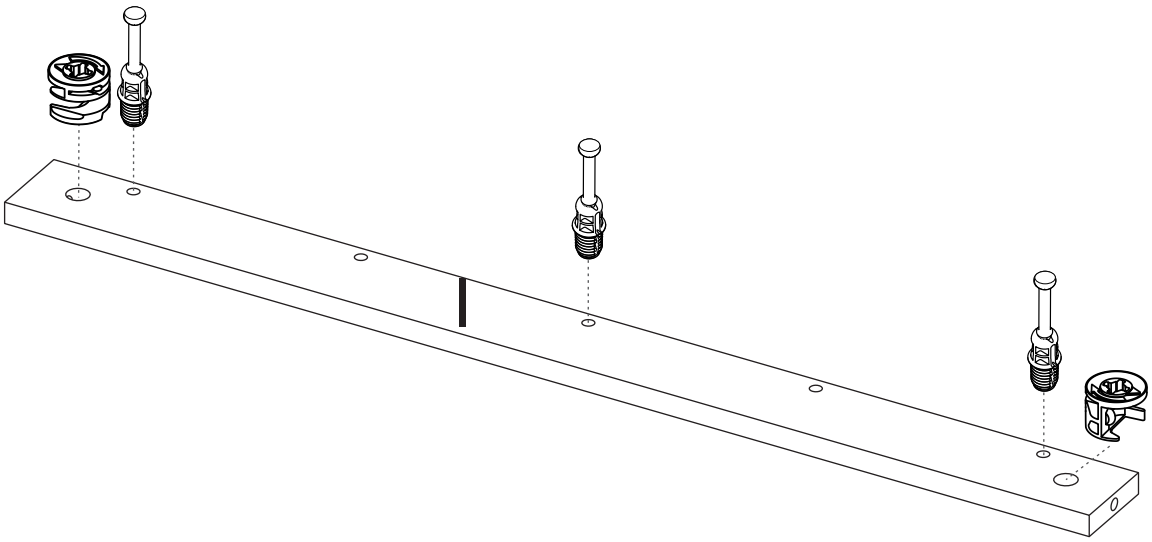

12

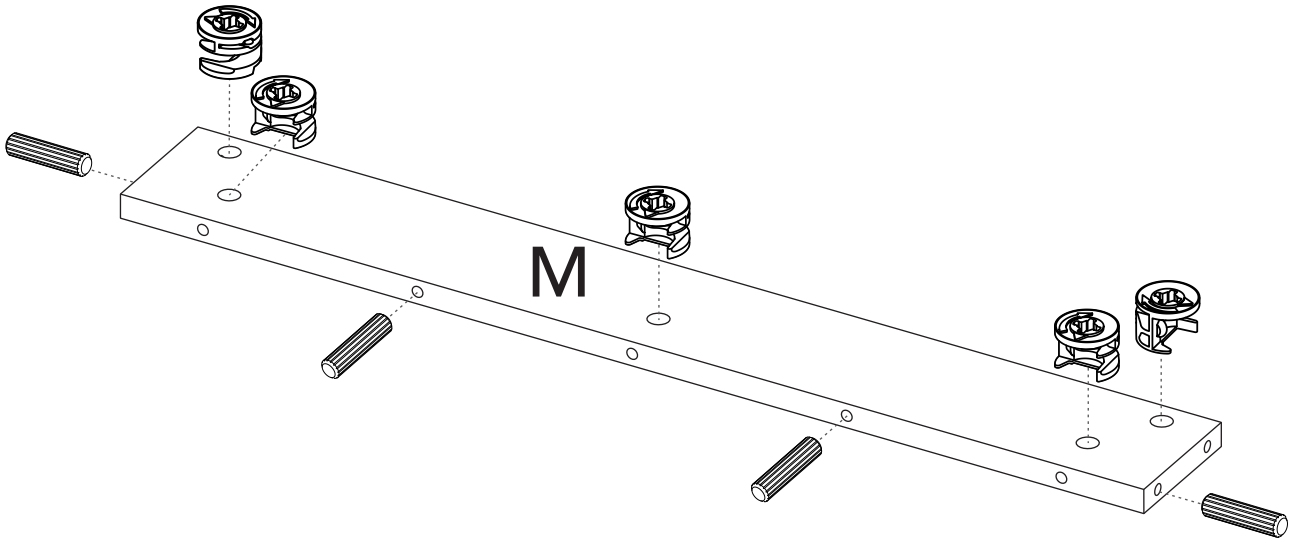

13

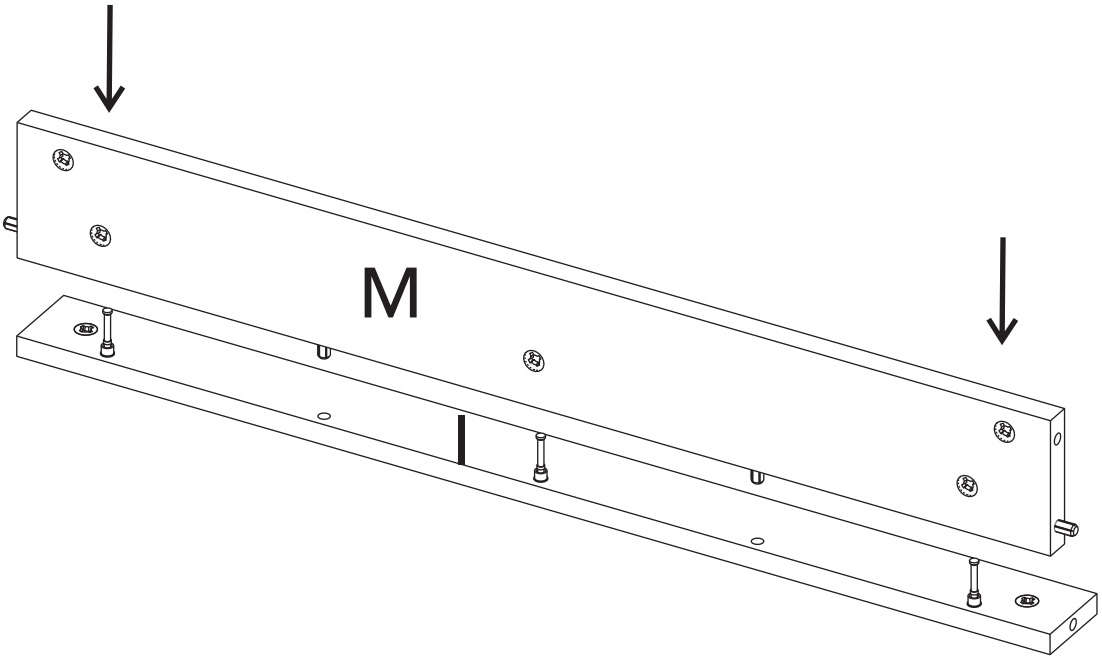

14

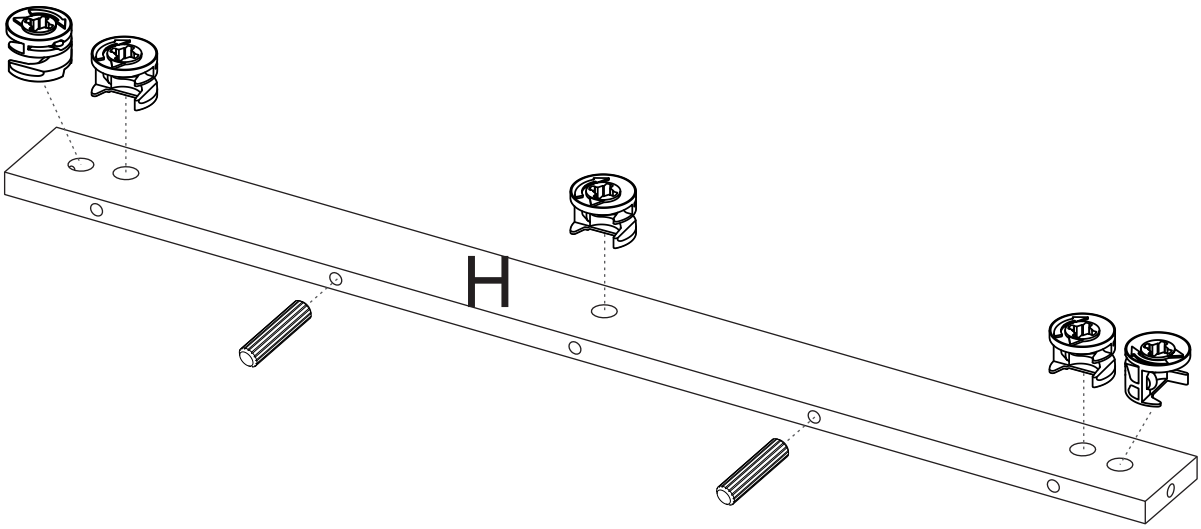

15

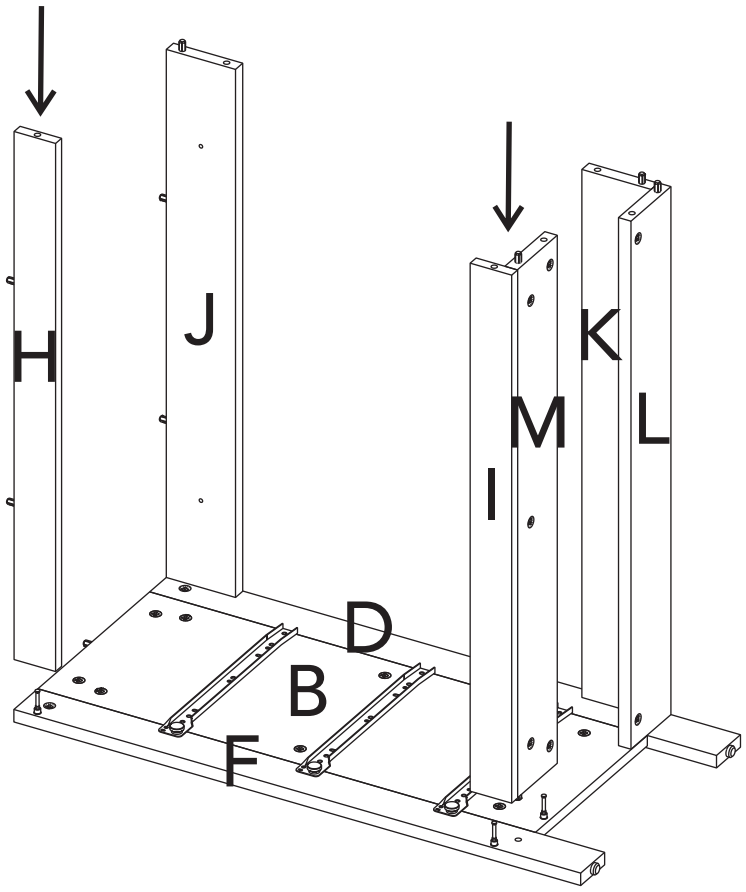

16

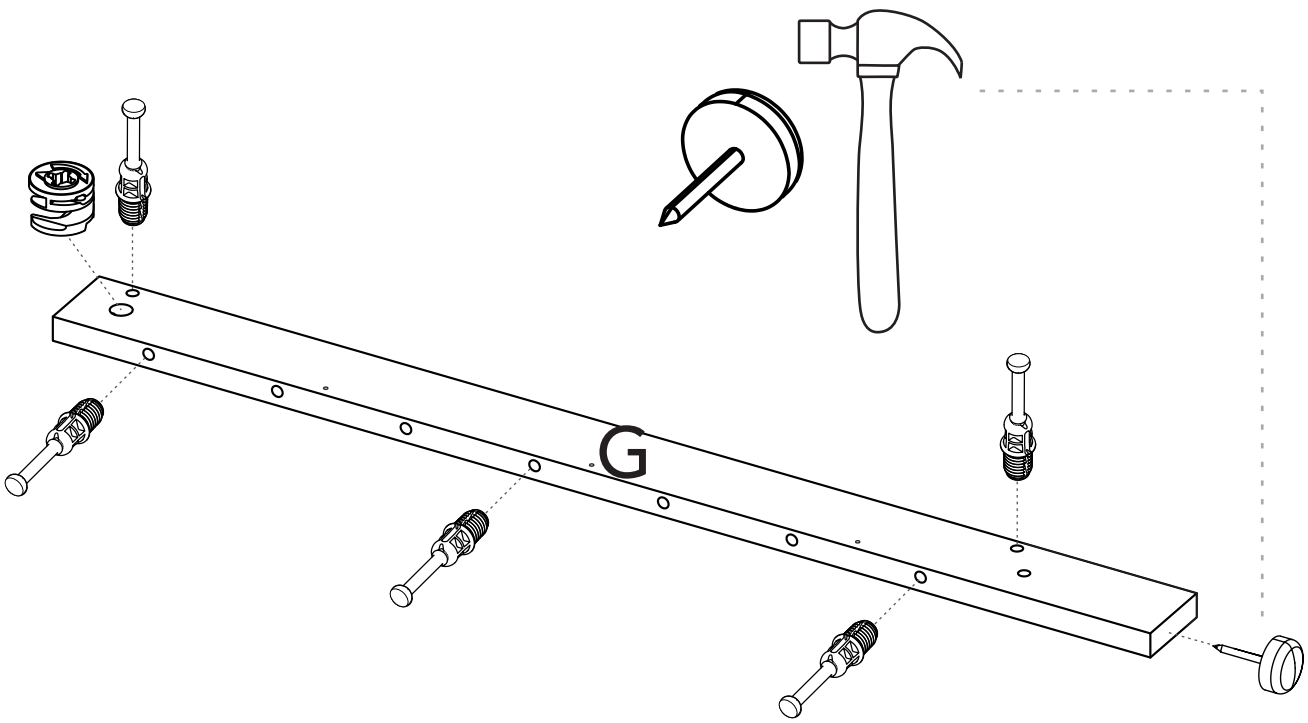

17

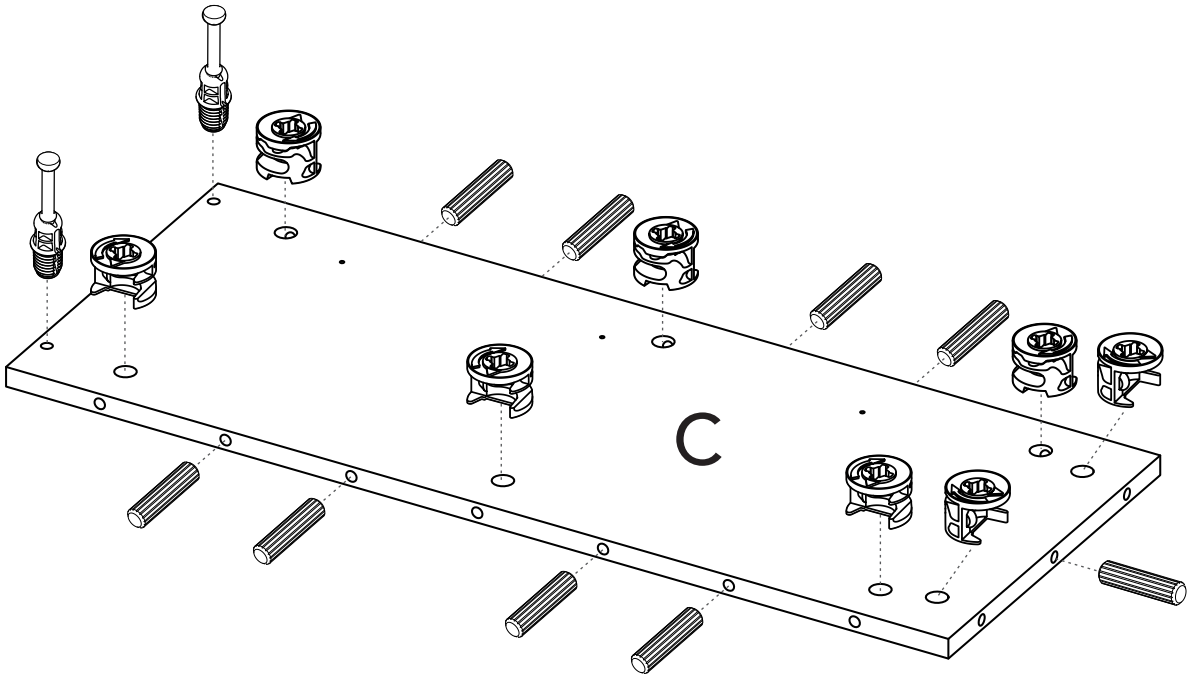

18

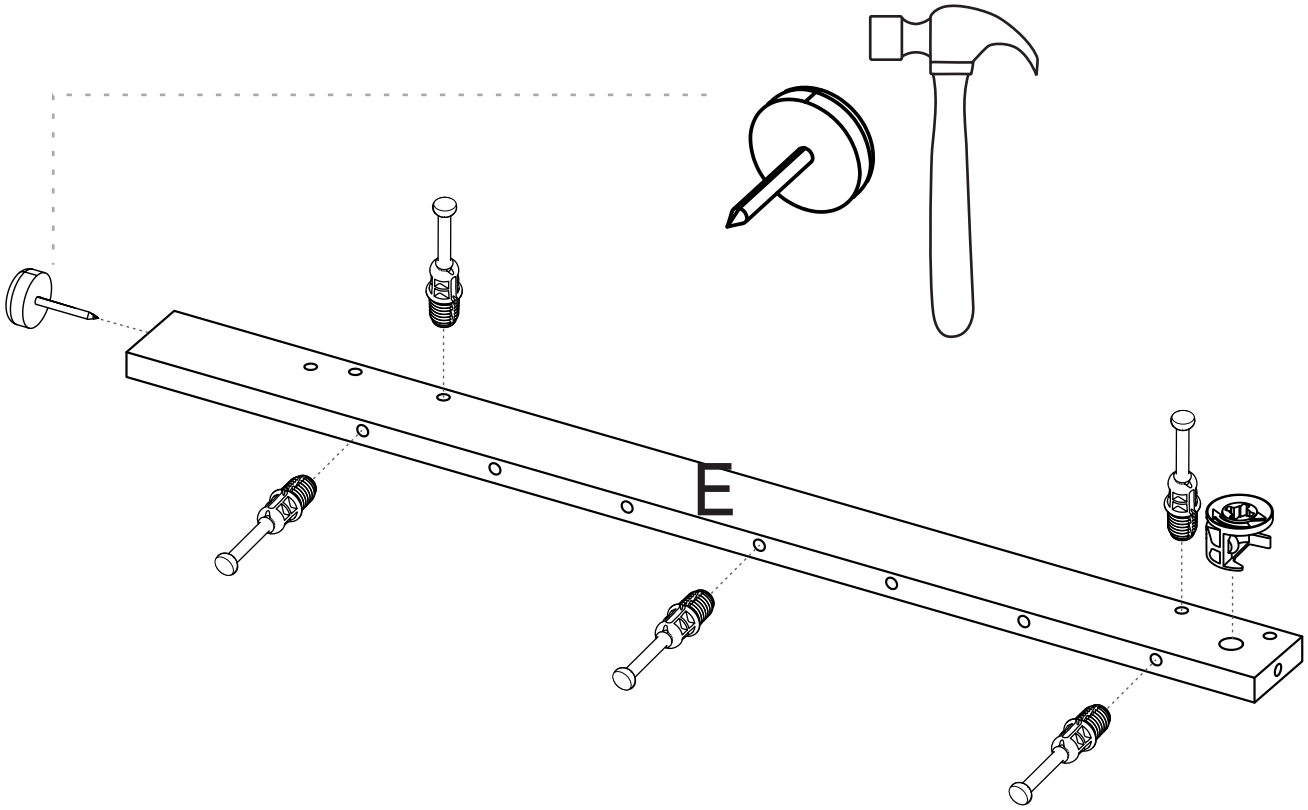

19

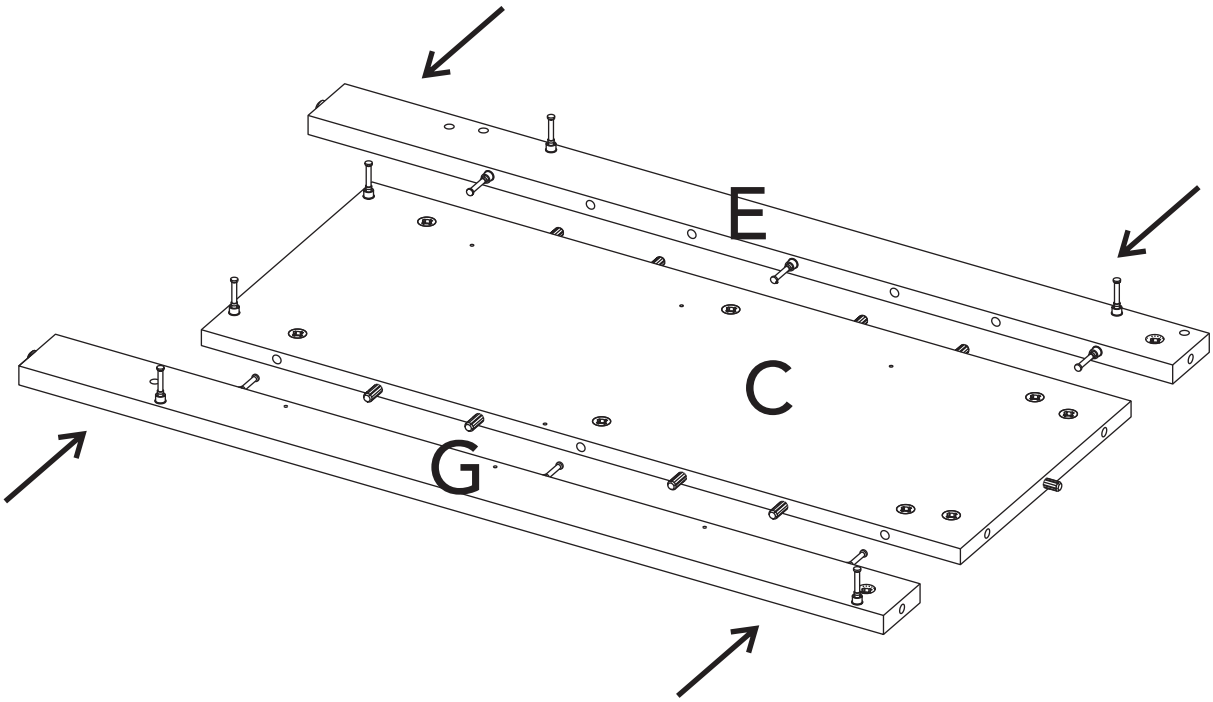

20 To recall the slides installation you can go to the 5Th step again.

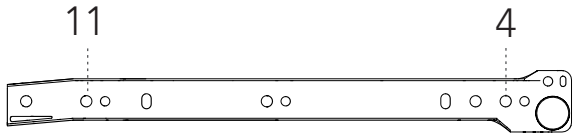

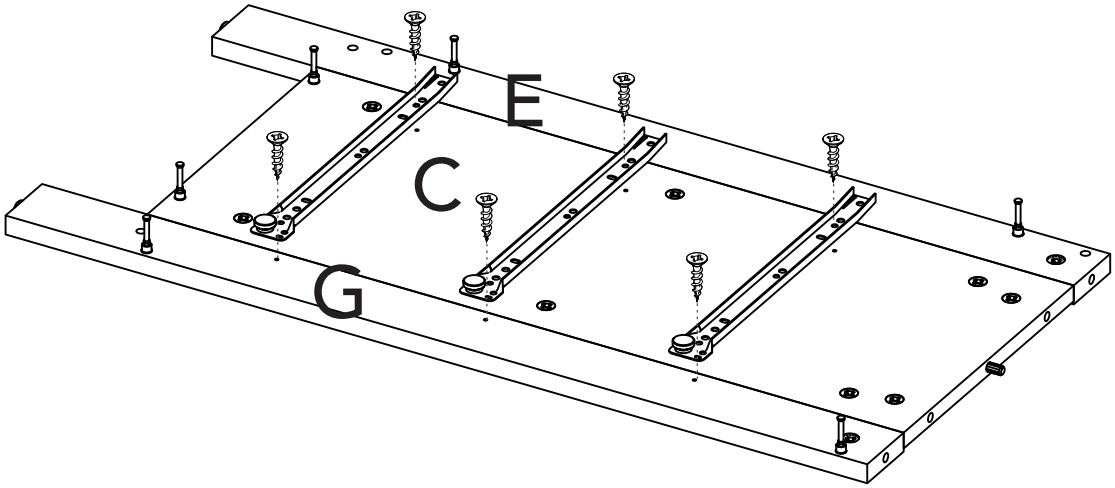

21

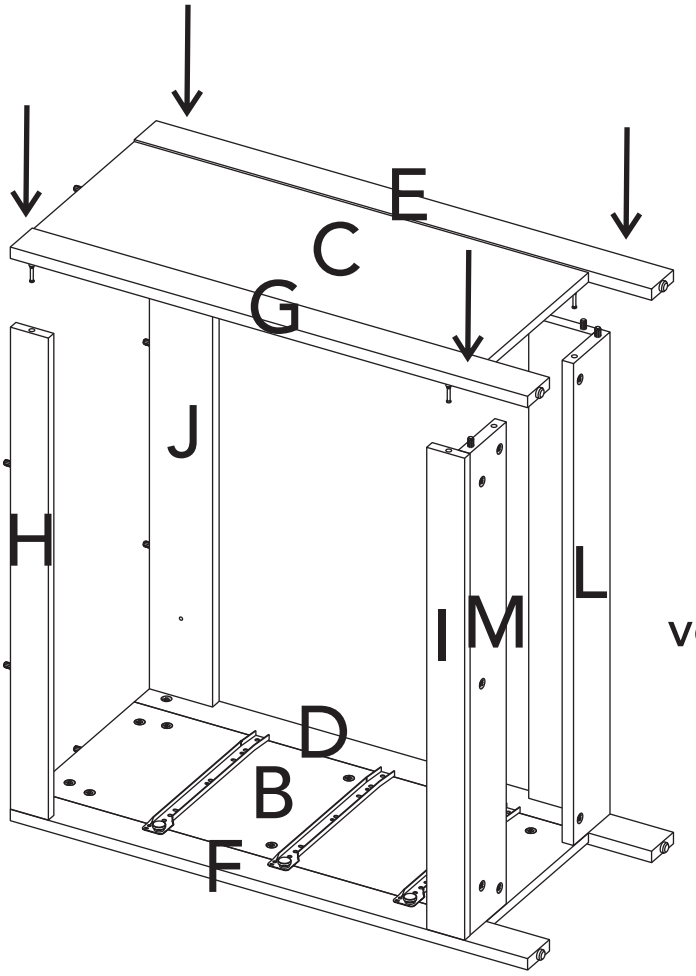

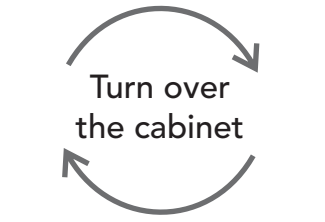

very carefully!

22

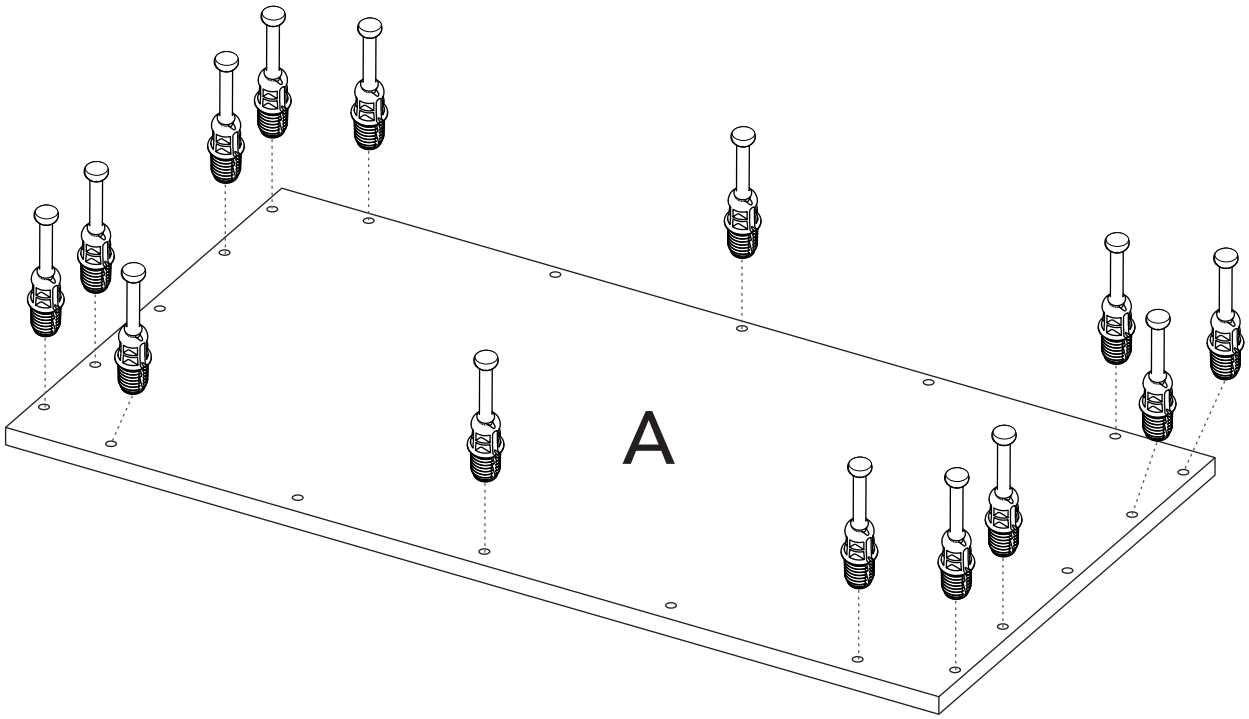

23

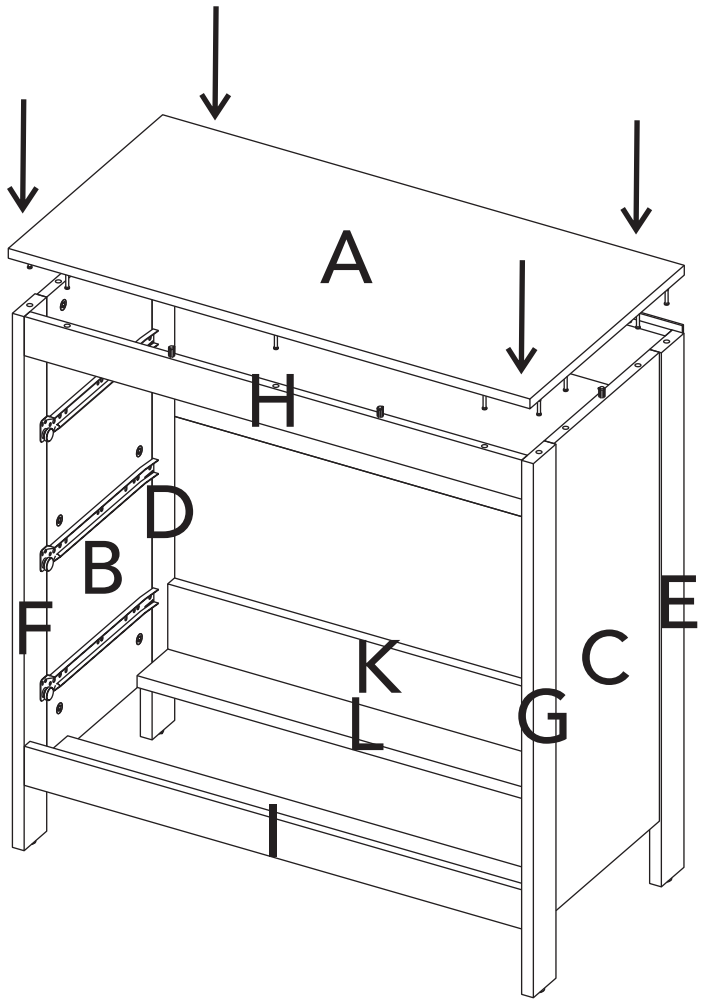

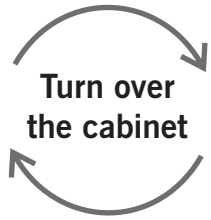

24

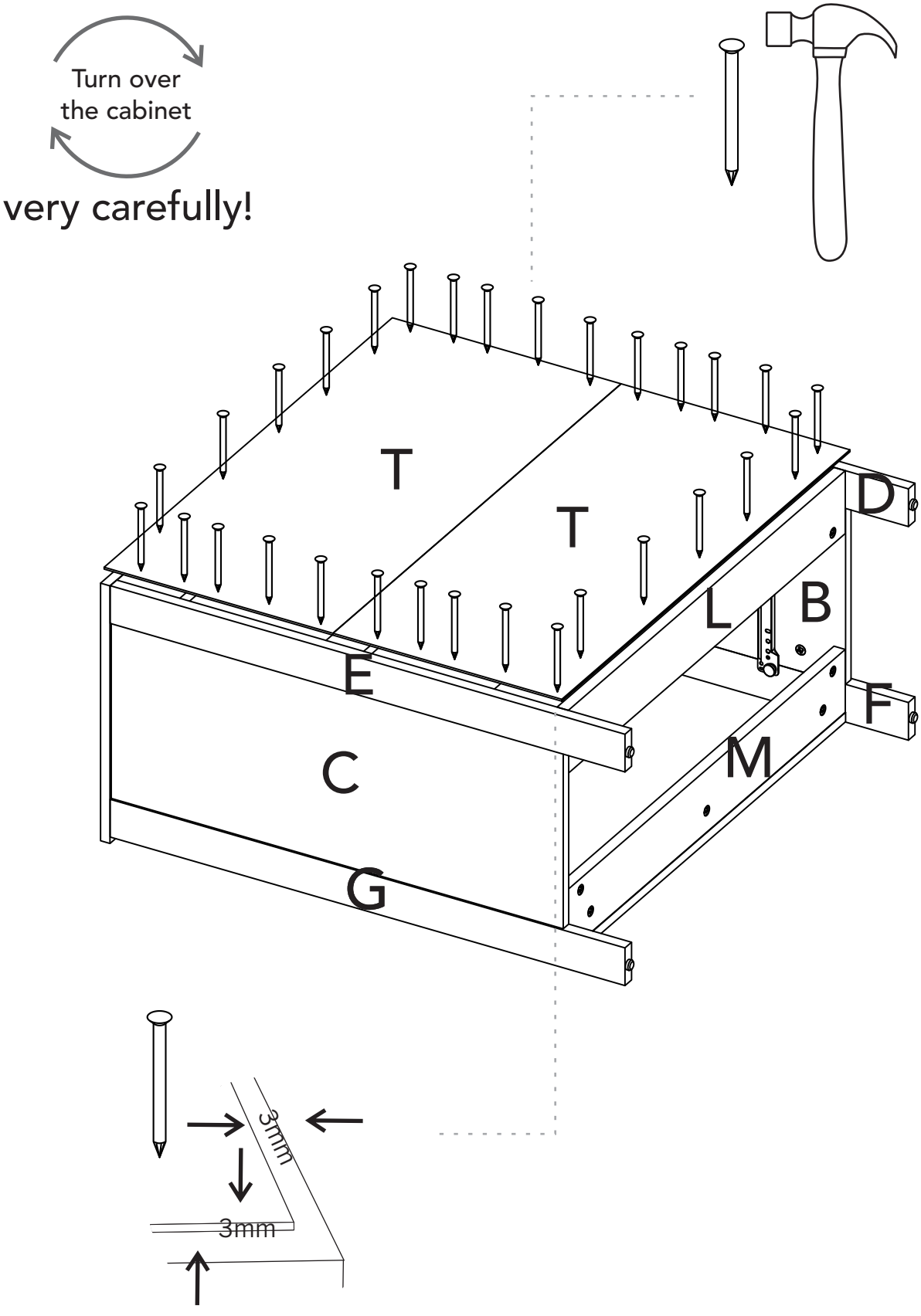

25

CHAZOS

Fix your cabinet to the wall

1 You must drill the bottoms guided by the holes in the structures wiht a 3/16" drill bit.

2 On the wall, measure and mark the points shown below.



3 Drill on the markings with a 5/16" drill bit.

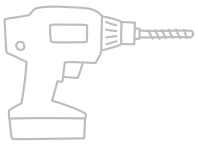

4 Insert the wall anchors inside the drillings.



5 Place the cabinet and secure it with the screws.



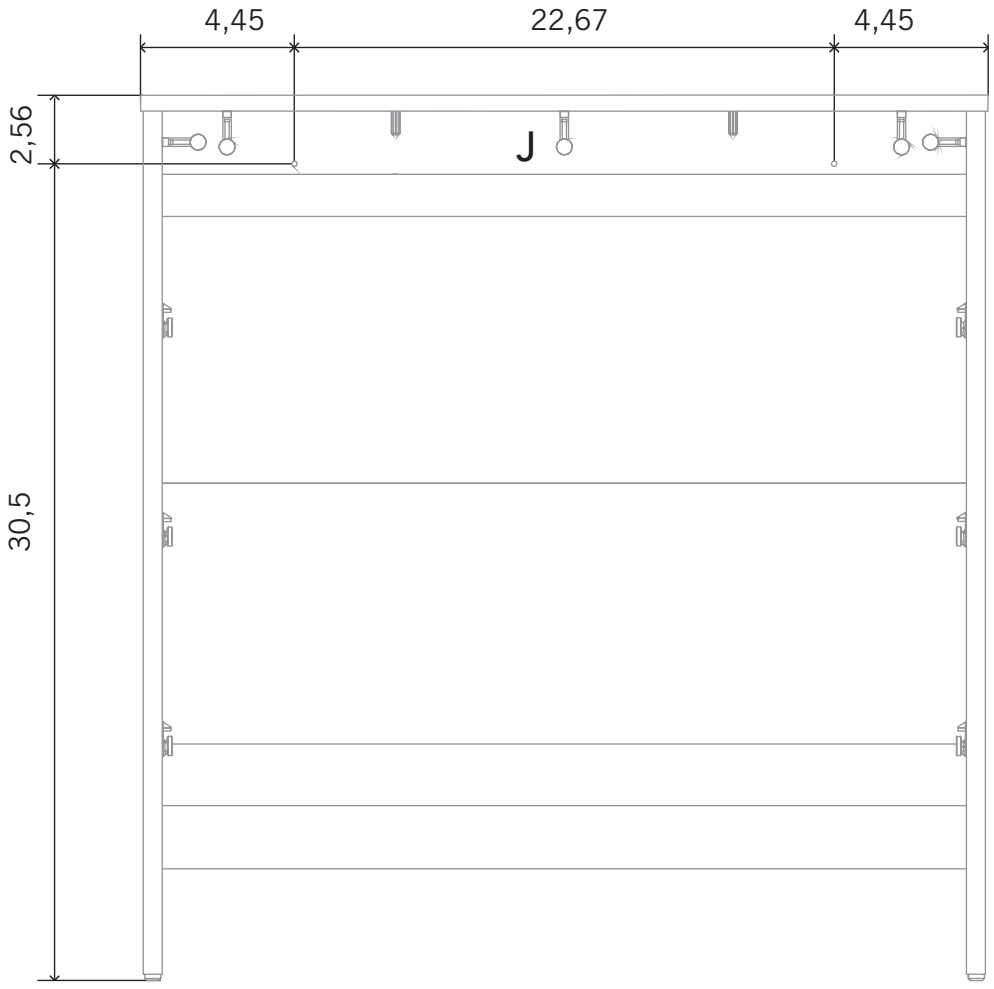

*Dimensions in inches

26

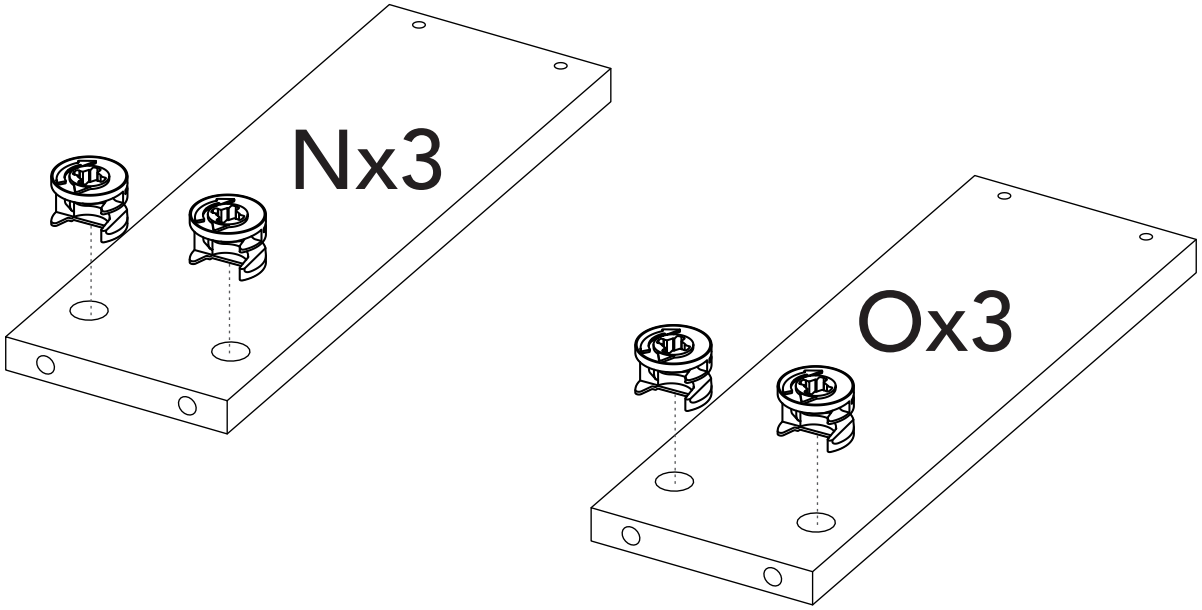

27

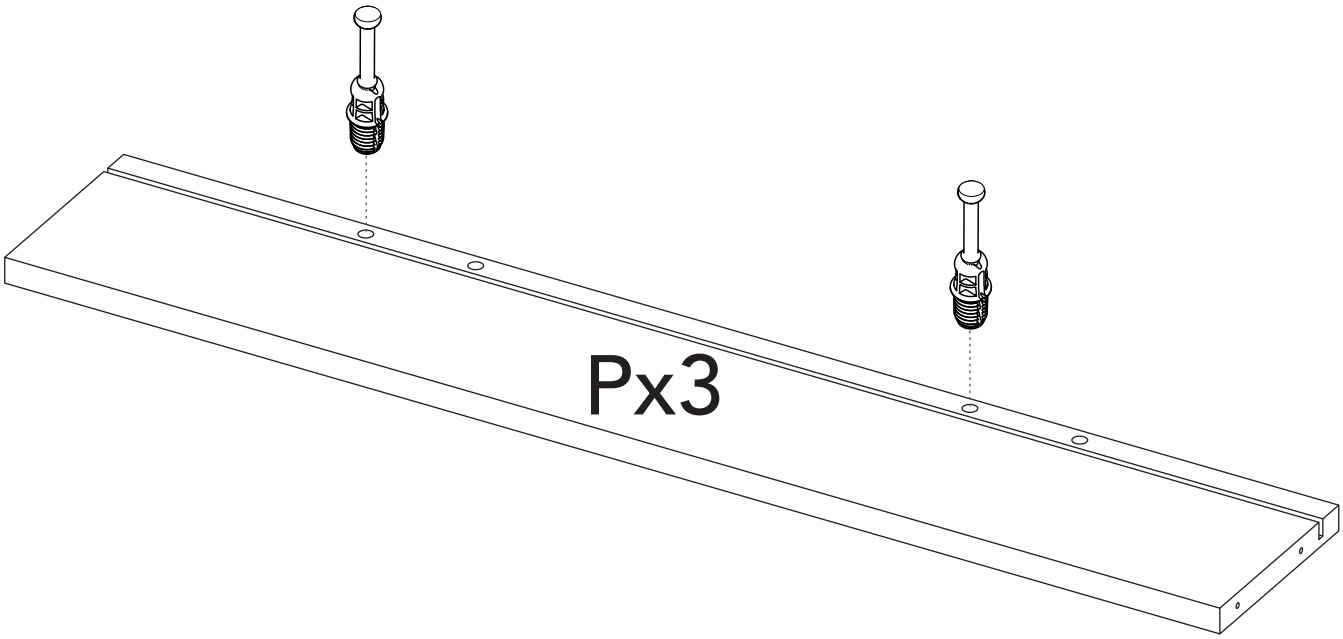

28x3

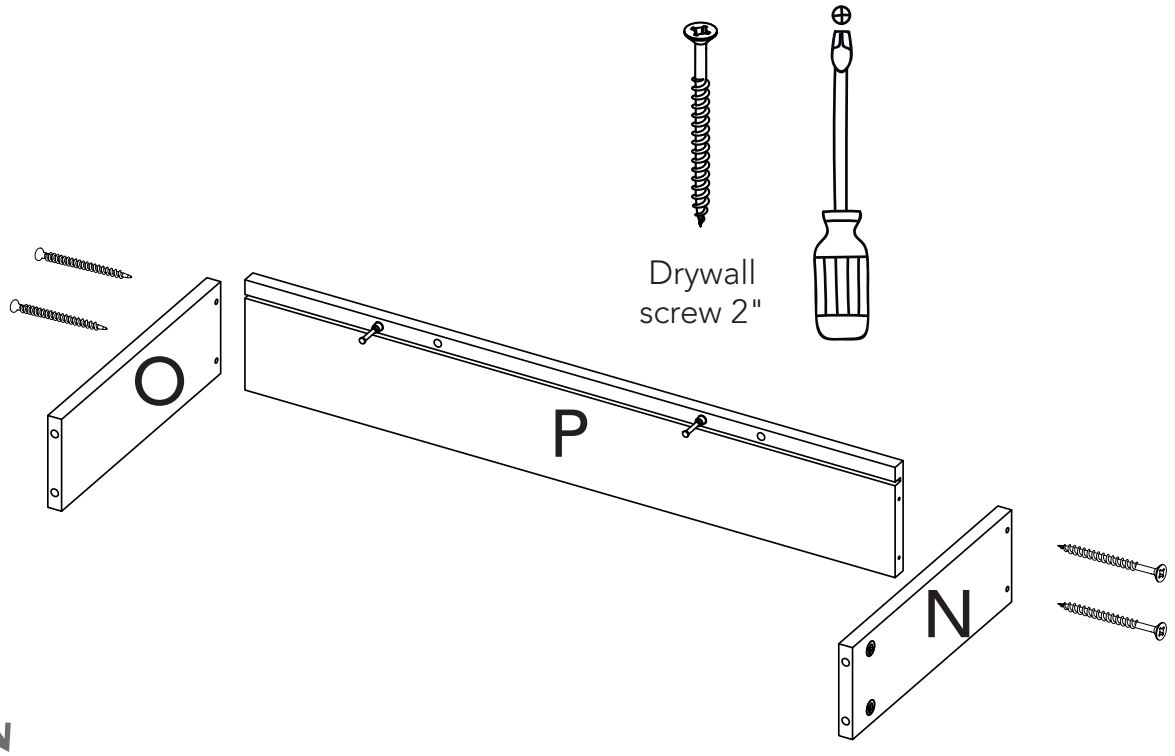

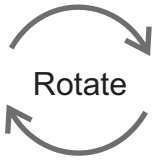

29

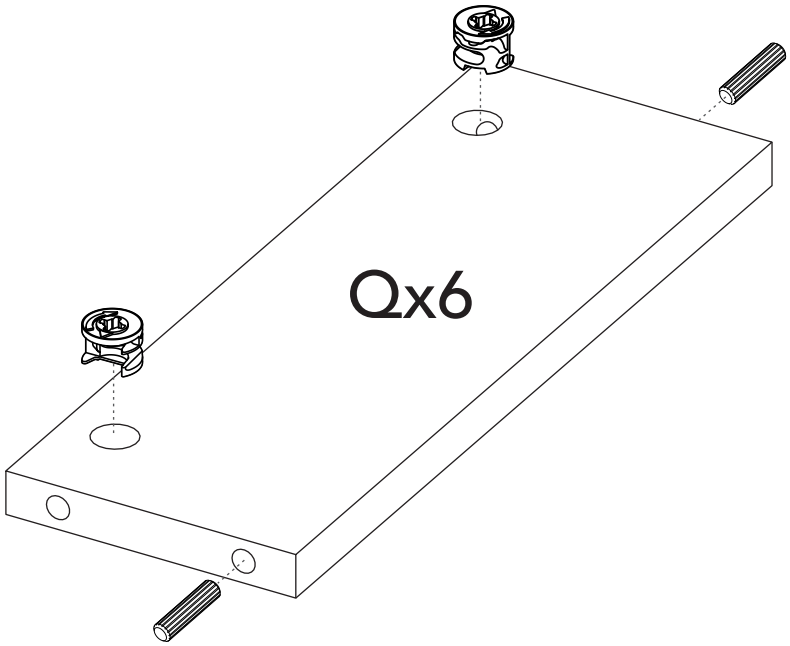

30x3

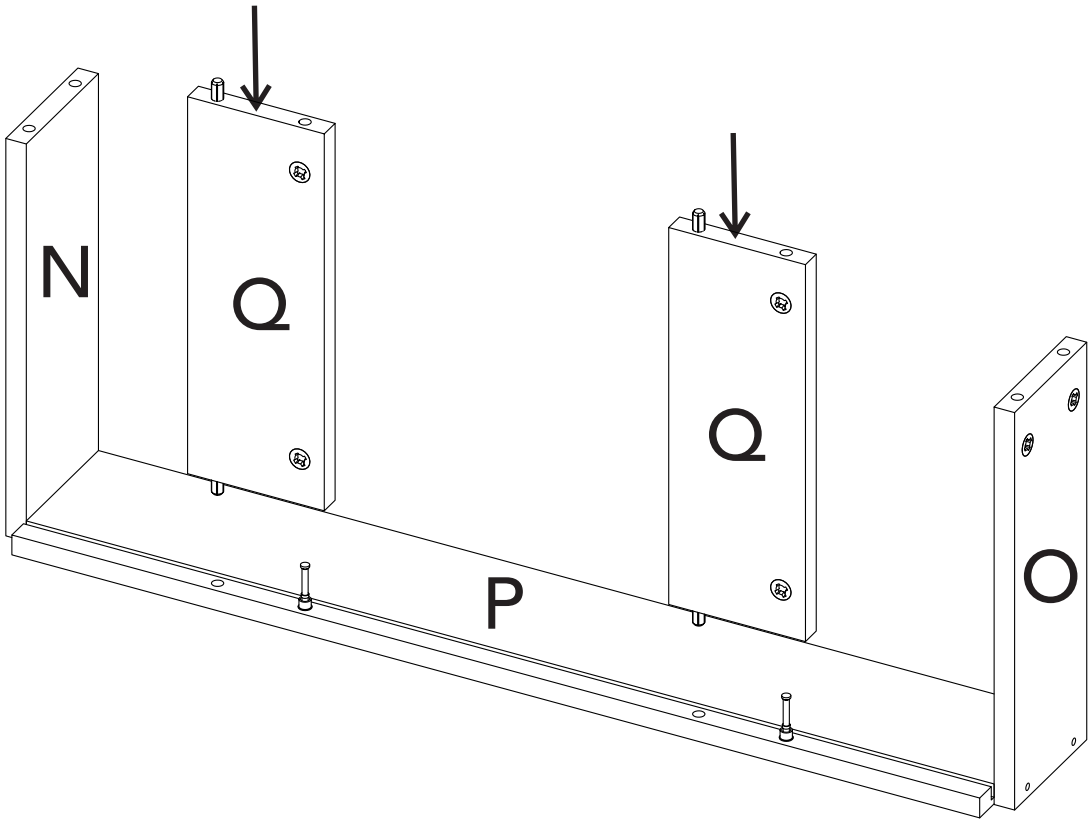

31x3

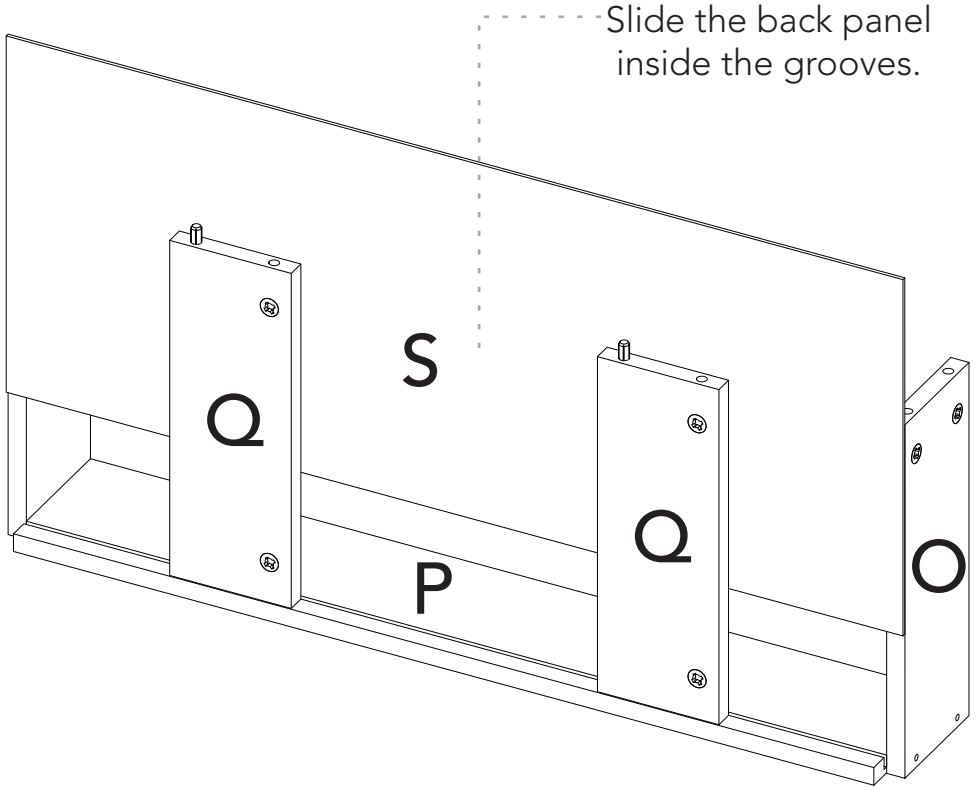

32

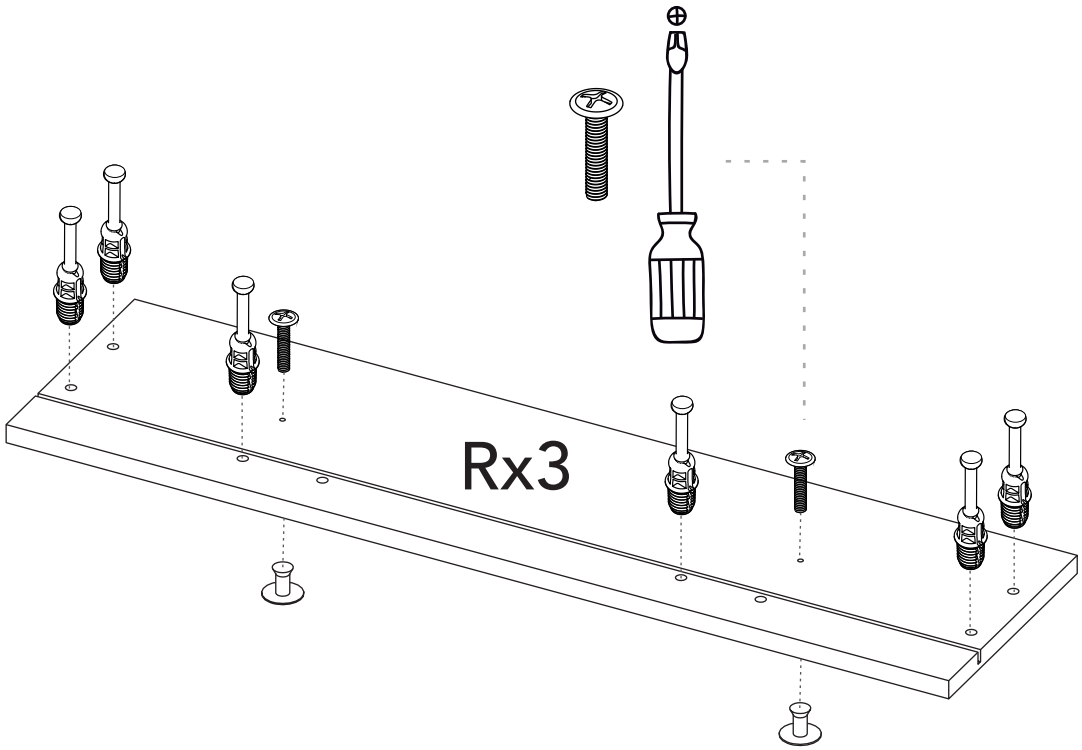

33x3

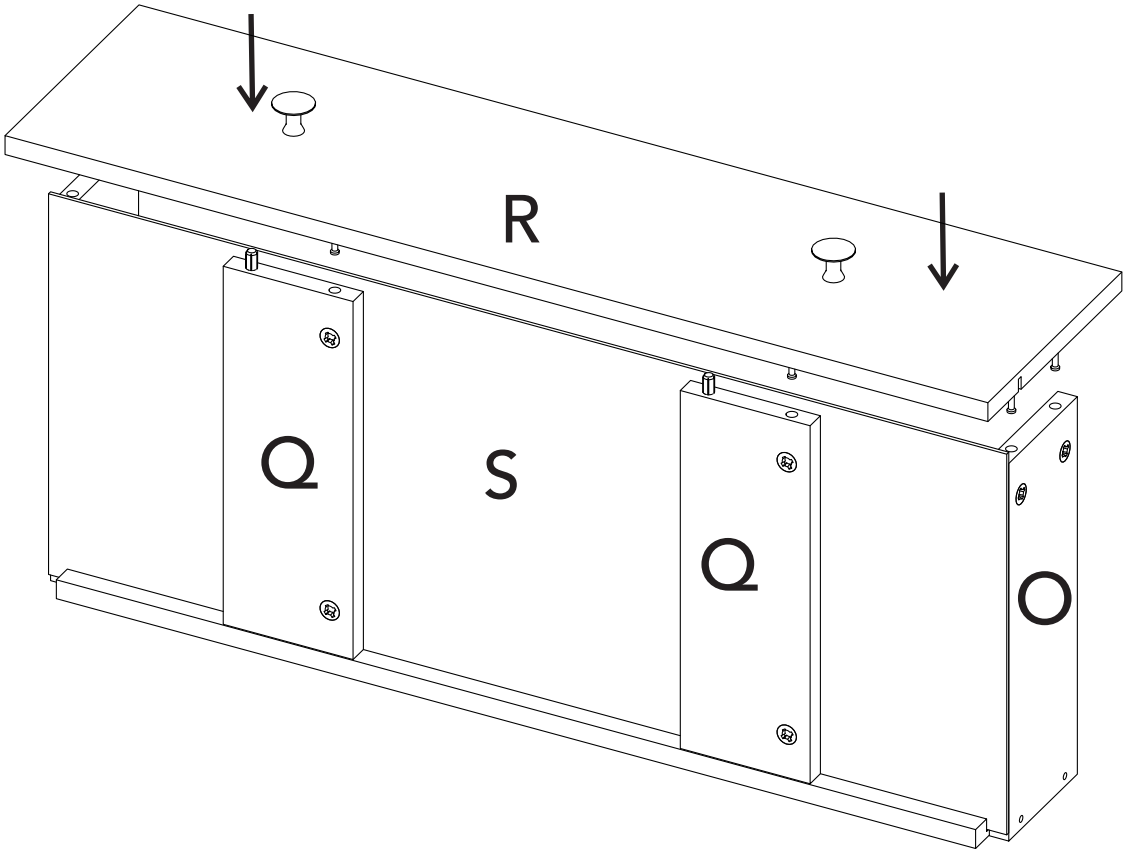

34x3

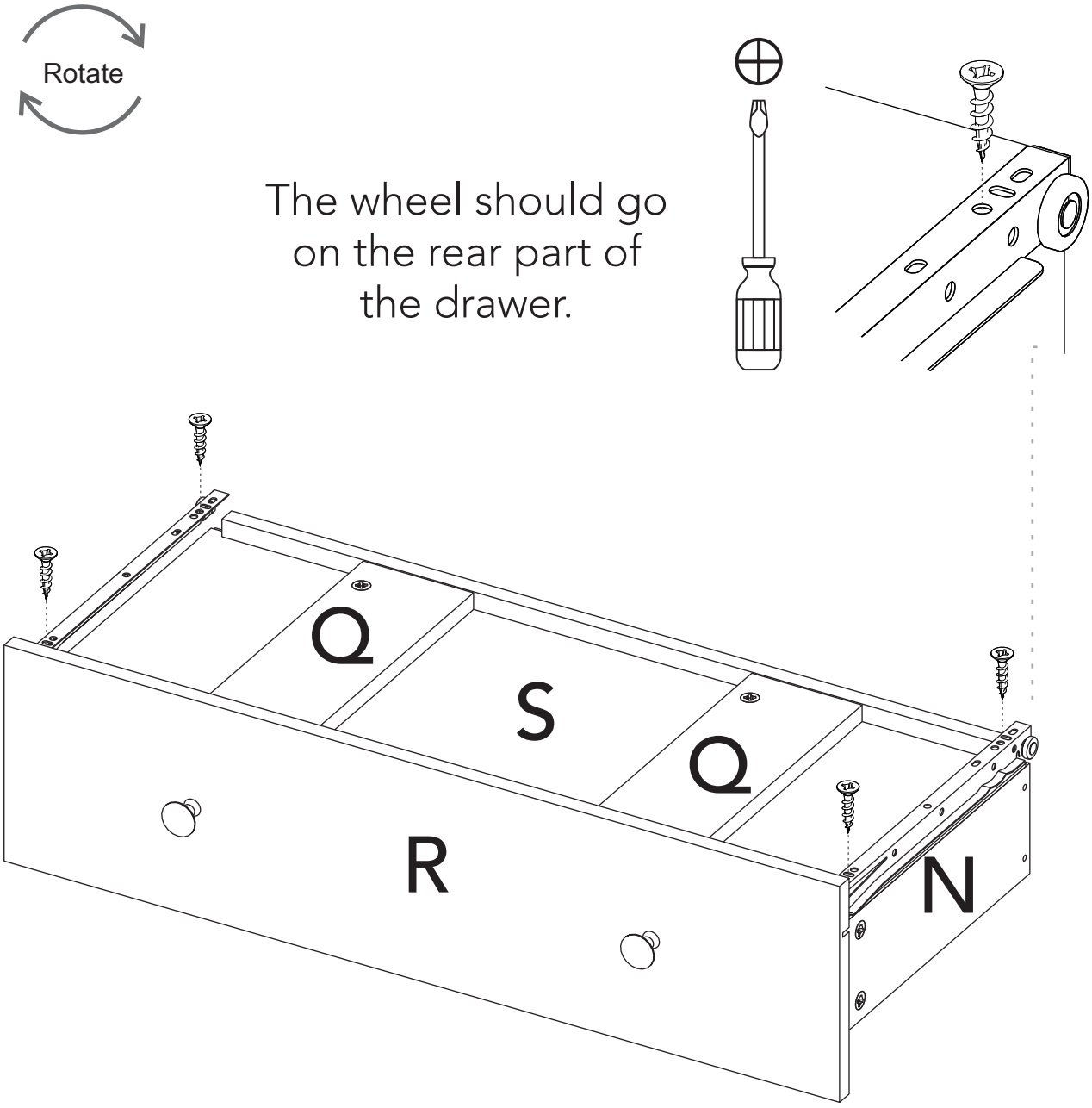
Rotate
The wheel should go on the rear part of the drawer.
Q
S
Q
R
N

35

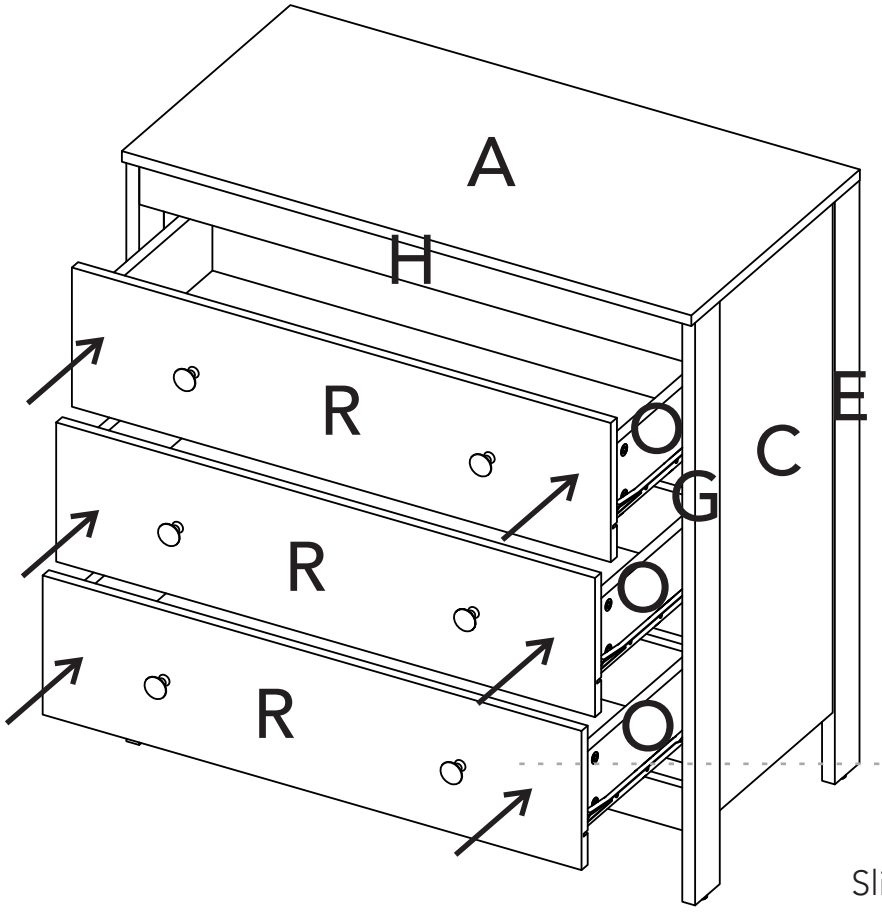

Slide the drawers inside the cabinet.

minix caps

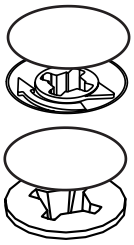

After you finish the adjustment of the cams and screws, cover them with the cover caps.

A

After you finish assembling the cabinet, take off the adhesive letters.

How much weight does my dresser resist?

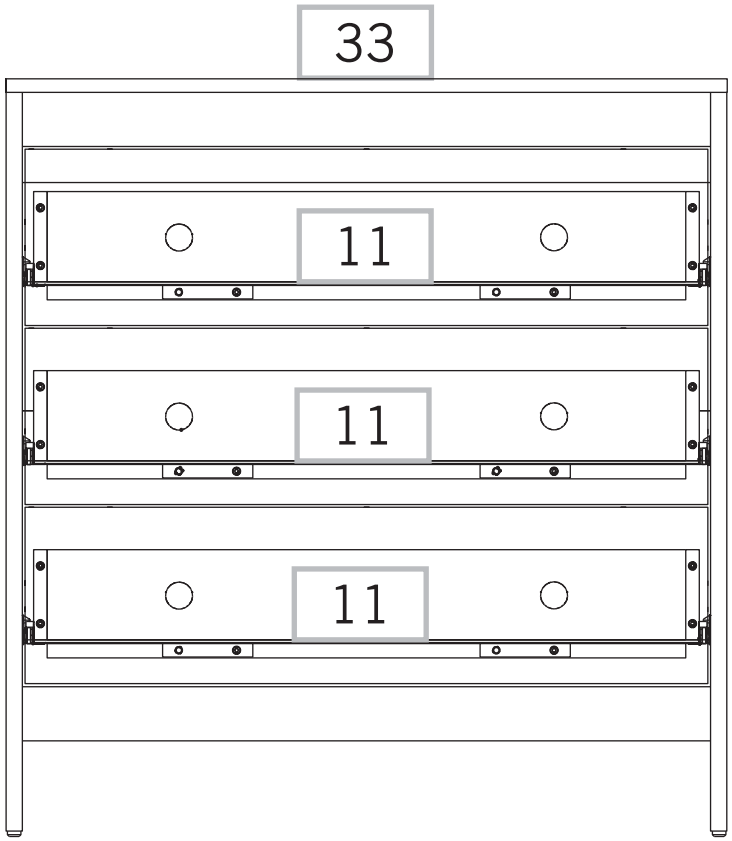

*weight in pounds

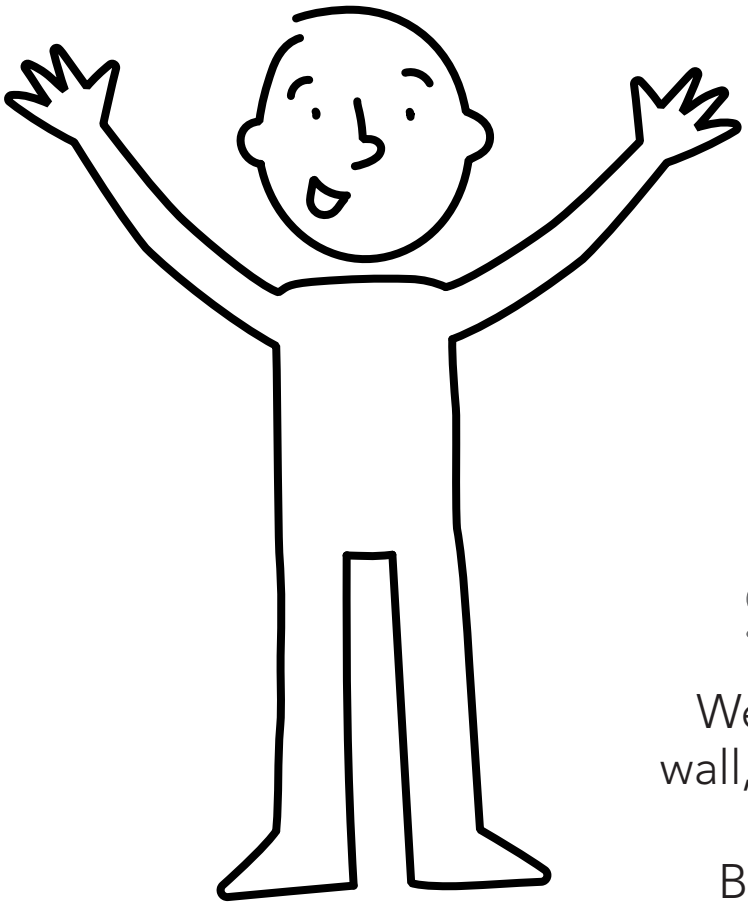

Congratulations! It's done

But don't go yet!

There are some recommendations left for you to take care of your table correctly from now on.

SUPER IMPORTANT!

We suggest fixing the closet to the wall, so we can avoid the table tipping and harming anyone.
Be specially careful with the kids.

Taking care of your dresser:

— Do not paint the dresser.

— The table it's exclusively for indoor spaces. Do not expose it to the direct sun.

— Clean the metallic hardware with a dry cloth.

— DO NOT overload the dresser (see suggested loads)

— Do not hit or hammer the dresser (only when indicated here).

— Clean it with thinner, a soft soap solution or simply a damp cloth.

— Don't drag the dresser, lift it up with other people.

— Avoid direct contact with water, fire or exposing it to high heat.

Dresser panels

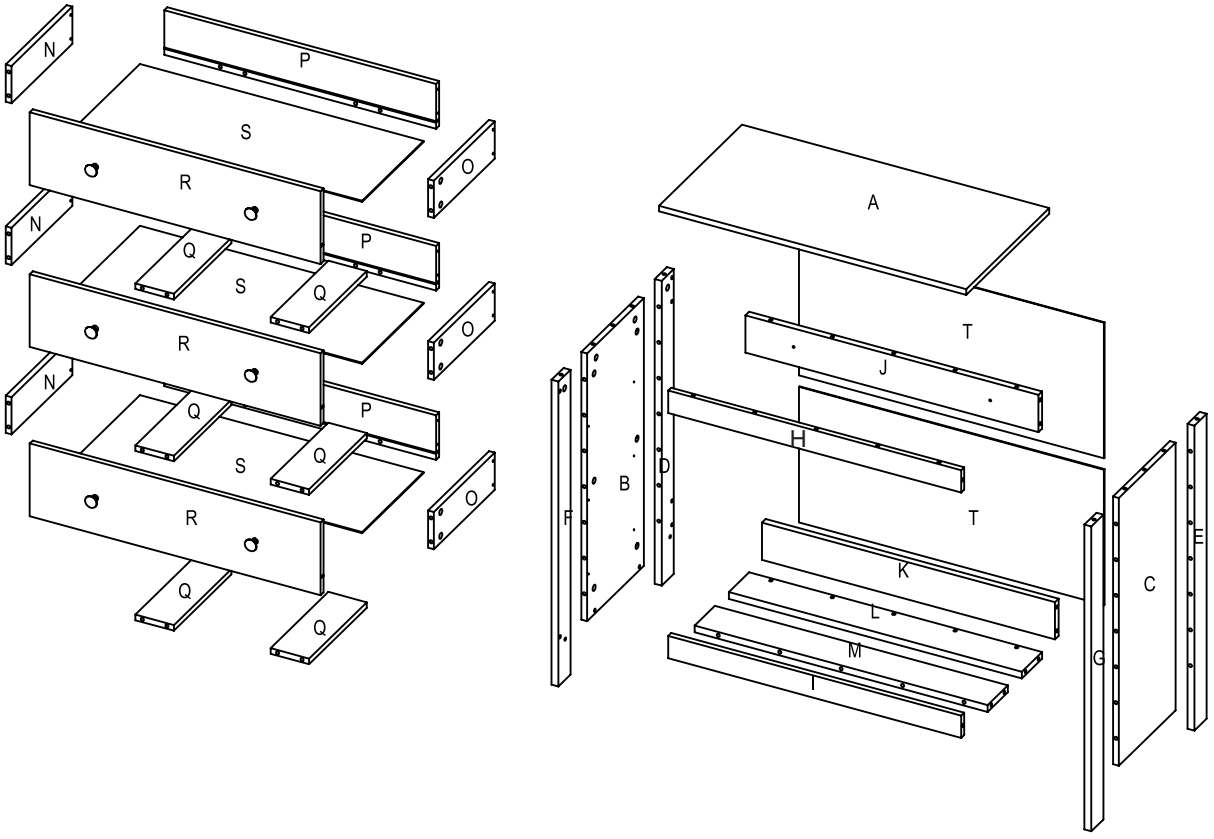

WARRANTY POLICY

Furniture has a 1 year warranty coverage in wooden parts and hardware pieces since its manufacturing date, which you can see in the lot number printed on the product box and the assembly instructions leaflet.

Warranty covers materials and workmanship imperfections which impair the assembly or correct functioning of the closet.

This warranty is not valid if the defects or imperfections are caused by the incorrect following of the assembly instructions, warnings and recommendations, misuse, intentional damage, fire or flood, or after modifications or any kind of alteration, or repaired by someone not authorized, when it´s been assembled 3 months after the date of purchase. These defects MUST be reported before the warranty coverage period ends. Once the product has been assembled, the company will not be responsible for defective and/or damaged parts.

This warranty is ONLY valid for the ORIGINAL PURCHASER, it doesn't apply if the product has been resold, rented, etc.

Furniture will take no liability for incidental or consequential damages caused to or by the product (This may not apply in your state).

To make this warranty valid you must write to our customer service email describing the product defect, lot number and submitting your sales reciept or proof of purchase, or contact us at our customer service line. Replaced parts will be under the product´s original warranty coverage period. Damaged parts will become property of the company.

There are no other warranties applicable to this product.