ASSEMBLY INSTRUCTIONS

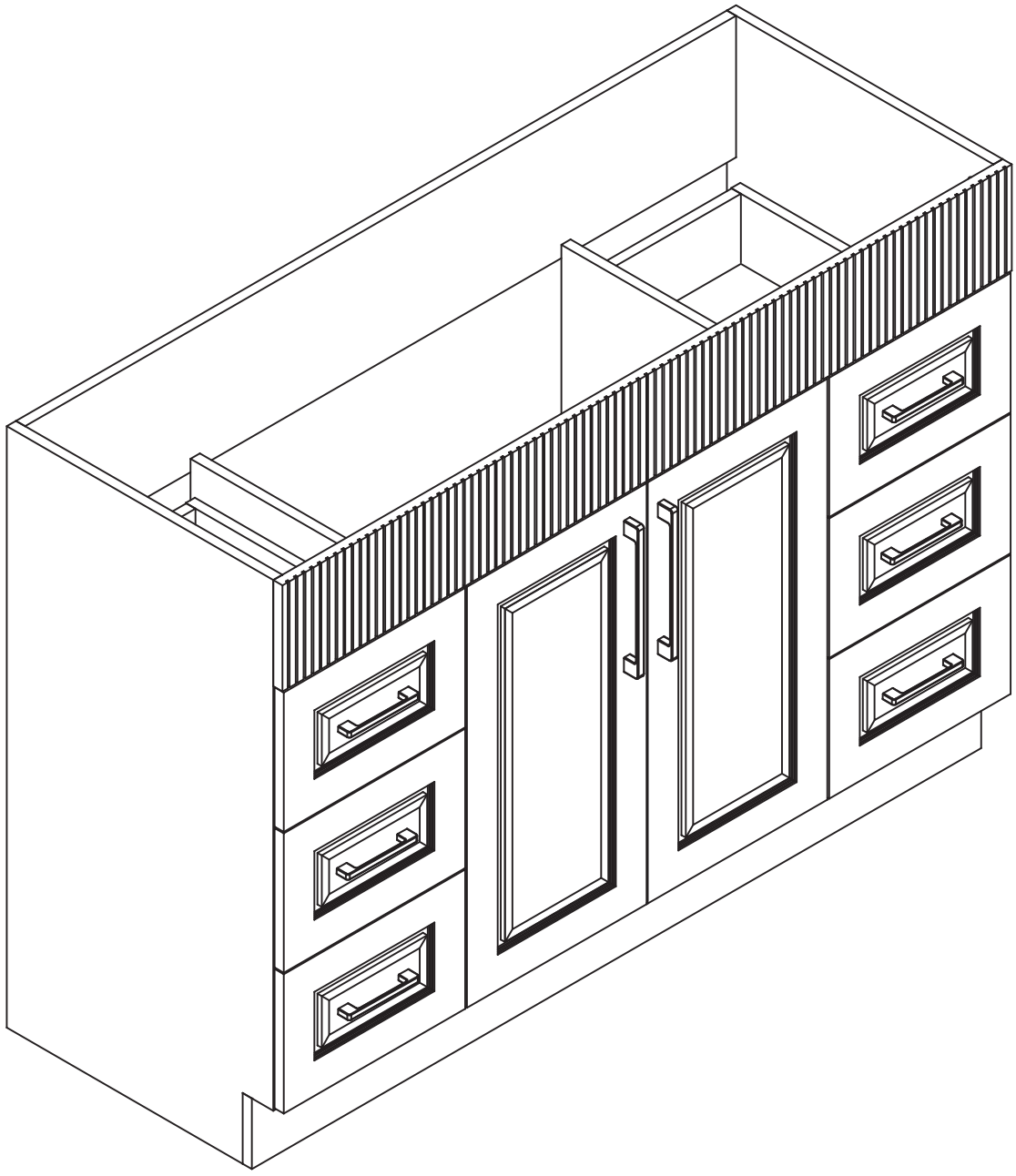

1 Thank you for purchasing in our store:

2 Recommendations Before Beginning Assembly:

- Read instructions, cover to cover.
  Have 2-4 adults on hand for assembly depending on product size.
  Do not assemble directly on flooring or carpet.
  Assemble on a clean non-marring surface. (example: packing foam)
  Save all packaging until finished.

3 Return Policy:

- If the board is damaged, you can tell us in time and we will send you a replacement or offer a free return. Please provide picture evidence/board number and send it to us for faster processing.
- If your product□s quality does not meet your expectations or you have found any sort of defect,please contact our customer service department and let us know the details of your order and any issues encountered, we will try our best to provide you with a solution.

4 Assembly Notice:

- As the cabinet are shipped in the form of boards, please check the condition of the item first, then refer to the instructions to ensure no parts are missing. If any pieces are found missing, please carefully look in the box first, as the hardware packaging might have torn making the hardware spill in the box.
- When setting up your product, DO NOT INSTALL THE SCREWS ALL THE WAY IN THE BEGINNING. Place each screw into their proper hole and use your hand to twist the screw halfway. Twist all the screws in halfway to ensure the holes will match up properly and the product is level on the ground. When everything seems fitted, then tighten the screws.
- When you have completed assembly, we suggest you have more than one person to assist you with lifting and placing the product.
- Caution: This product contains small components. Please ensure that they are kept away from small children.

ASSEMBLYINSTRUCTIONFOR
MODEL:VANITY-NO SINK-ELY48

ASSEMBLY

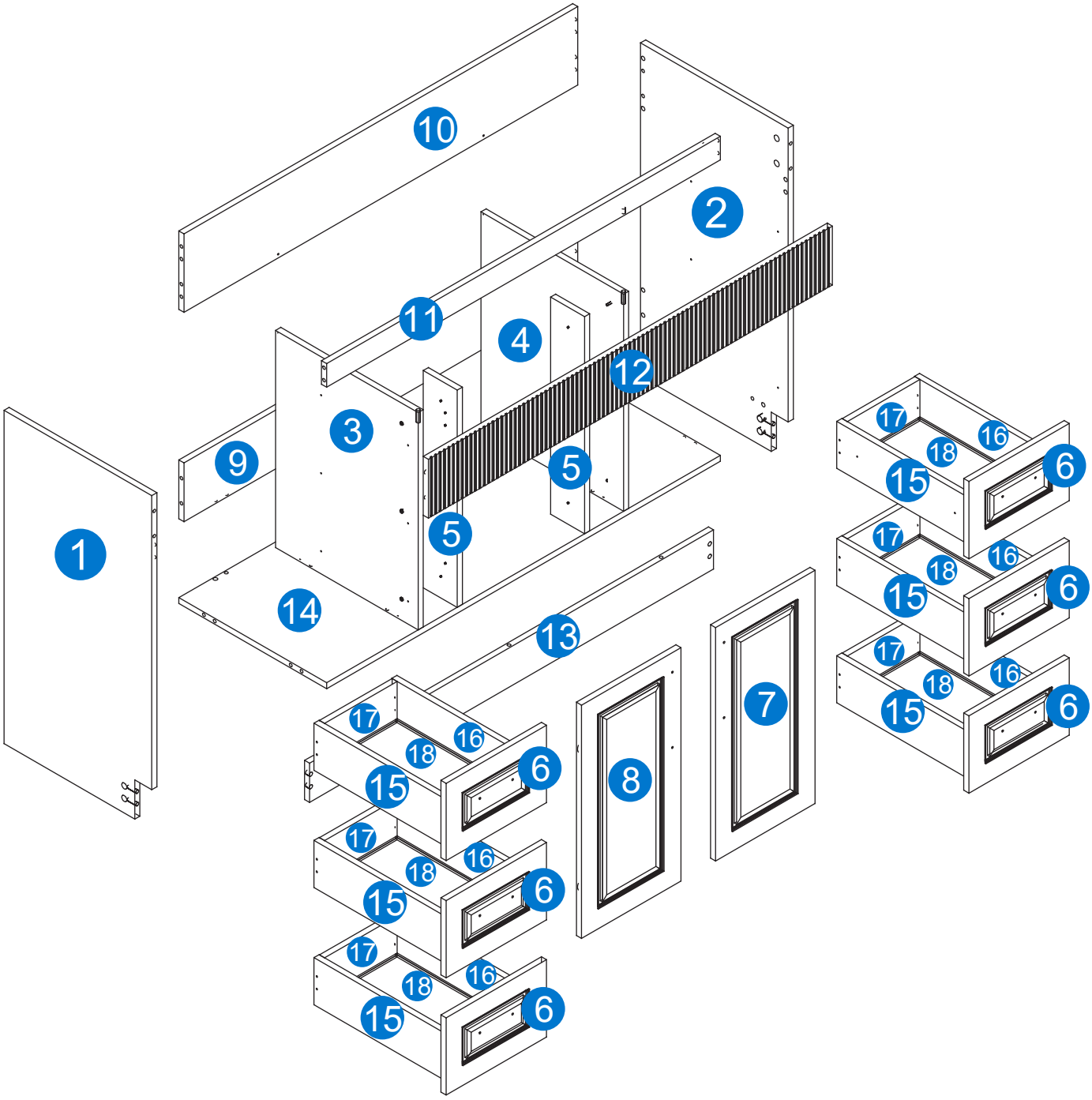

ASSEMBLYINSTRUCTIONFOR
MODEL:VANITY-NO SINK-ELY48

PARTS LIST

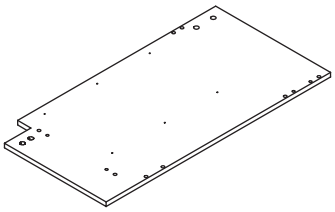

1 x1

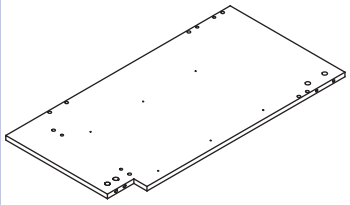

2 x1

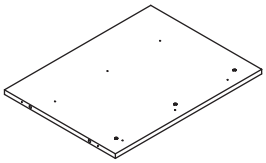

3 x1

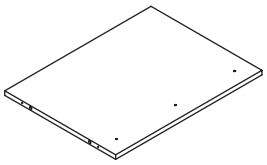

4 x1

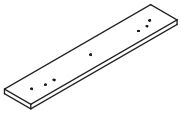

5 x2

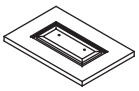

6 x6

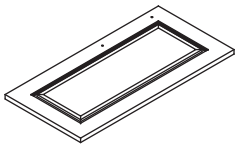

7 x1

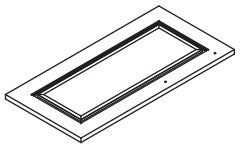

8 x1

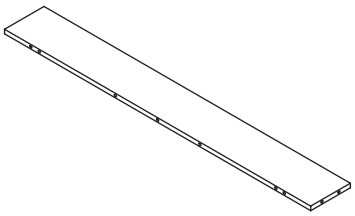

9 x1

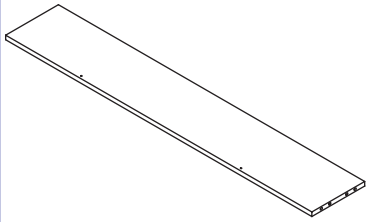

10 x1

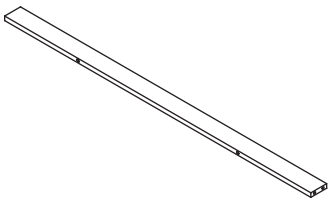

11 x1

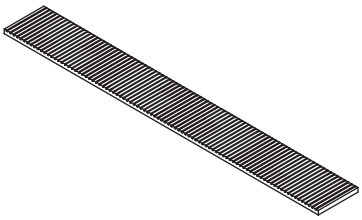

12 x1

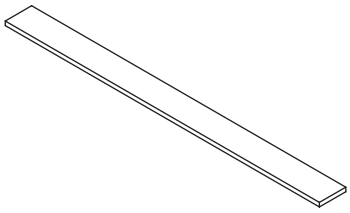

13 x1

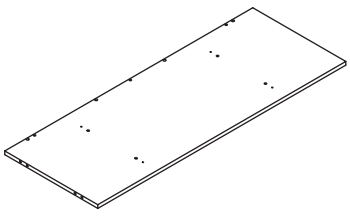

14 x1

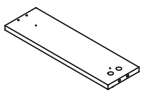

15 x6

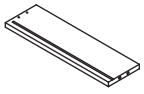

16 x6



17 x6

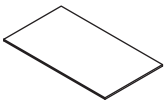

18 x6

HARDWARE

PART	DESCRIPTION	PICTURE	QTY
A	Screw / Connector Bolt	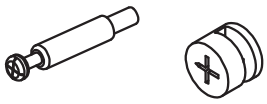	52
B	Dowel Pin	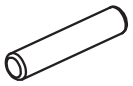	20
C	Hinges	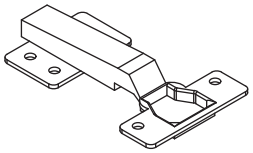	4
D	Screws 3.5x14	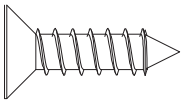	72
E	Handle 192#	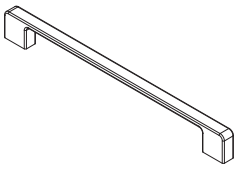	2
F	Touch-up patch		52
G	Screws 3.5x35	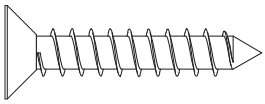	30
H	Screws 3.5x25	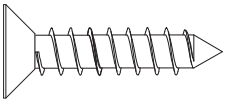	6
I	Handle 96#	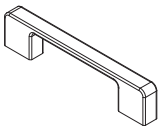	6
J	Drawer rail set	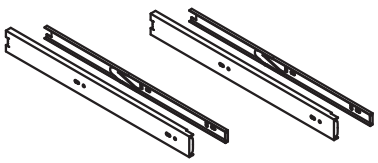	6
K	Handle screw		16

ASSEMBLYINSTRUCTIONFOR
MODEL:VANITY-NO SINK-ELY48

STEP 1

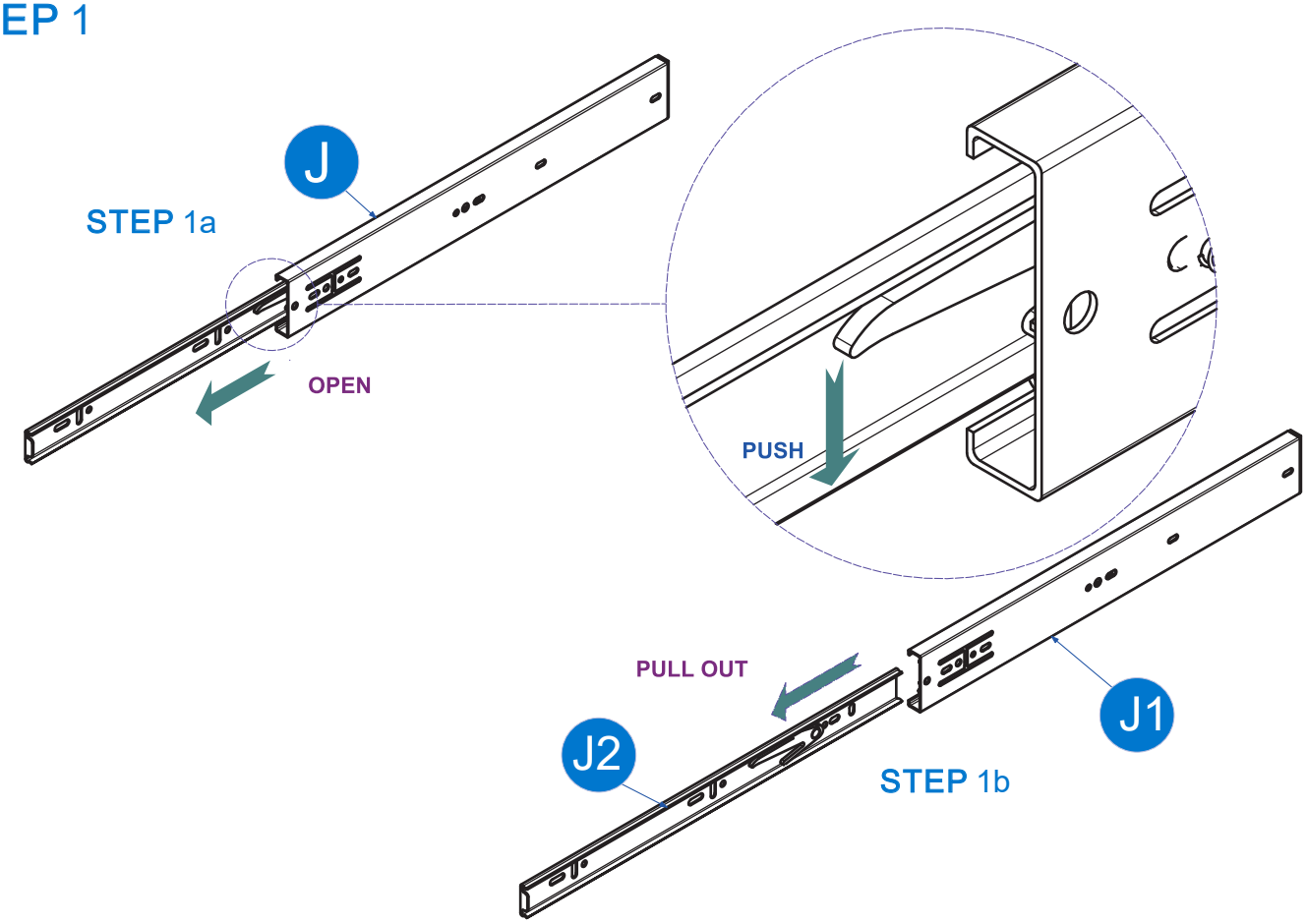

STEP 2

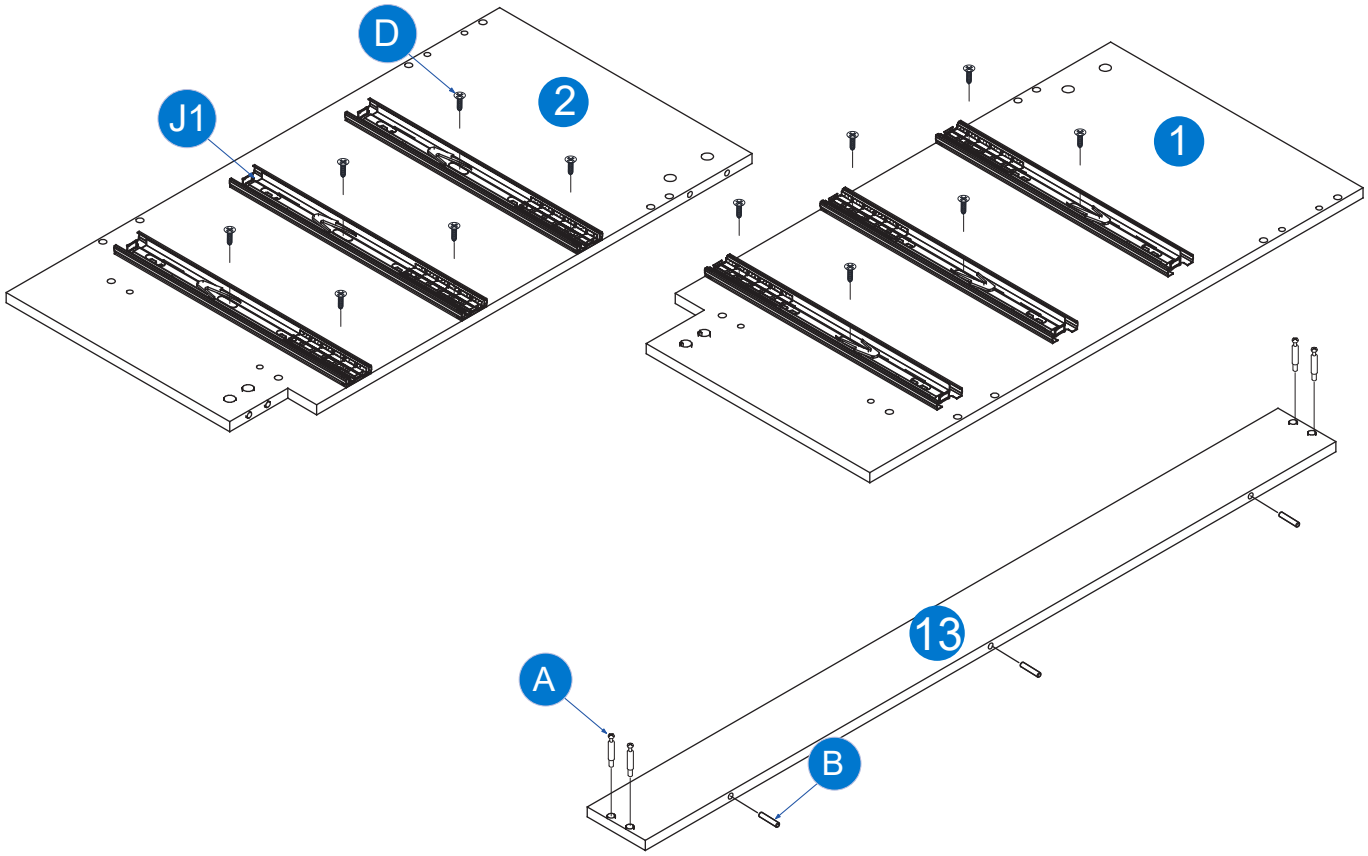

STEP 3

STEP 3a

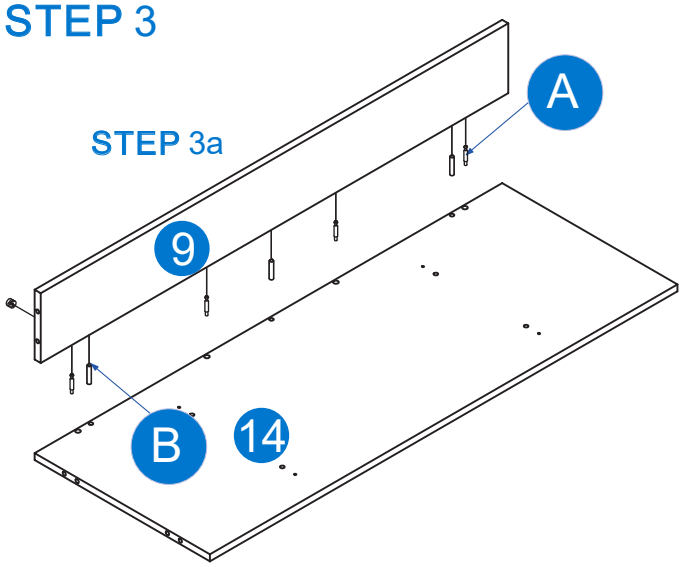

STEP 3b

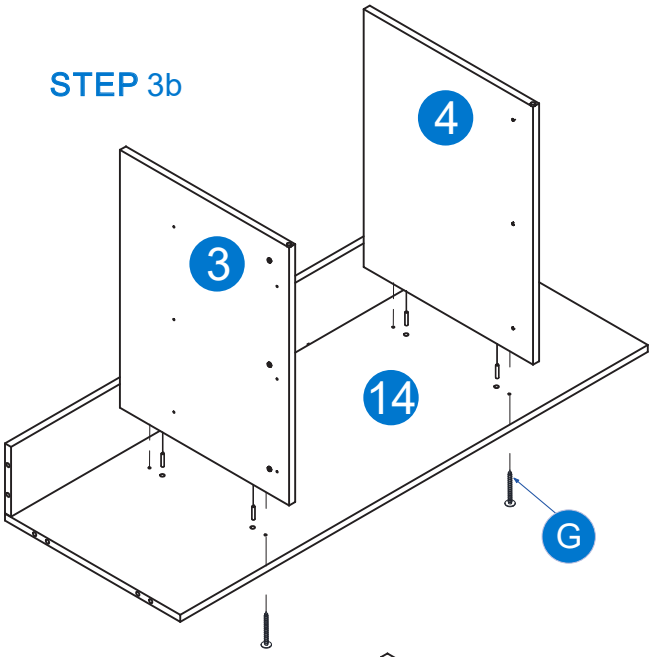

STEP 3c

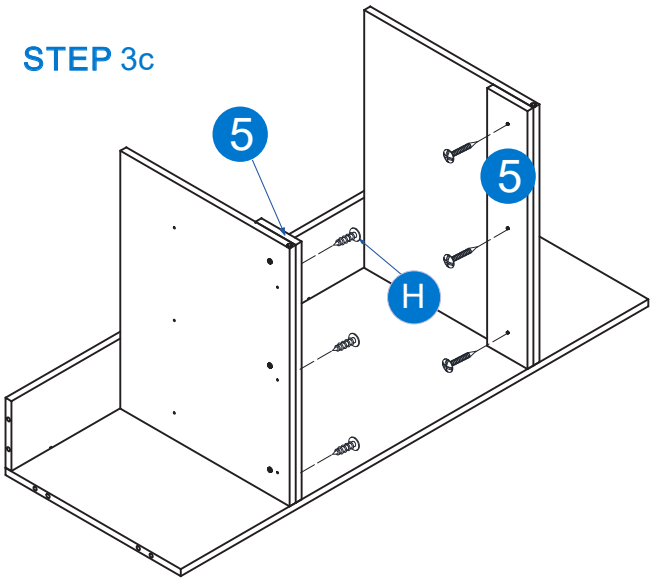

STEP 3d

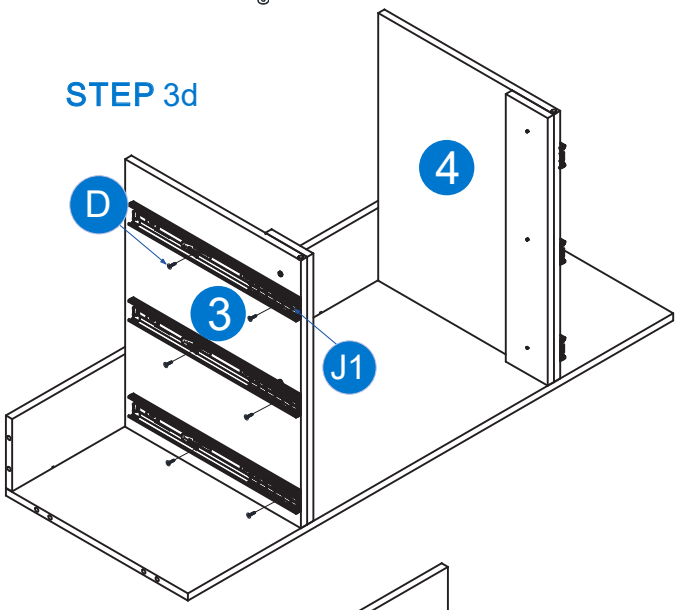

STEP 3e

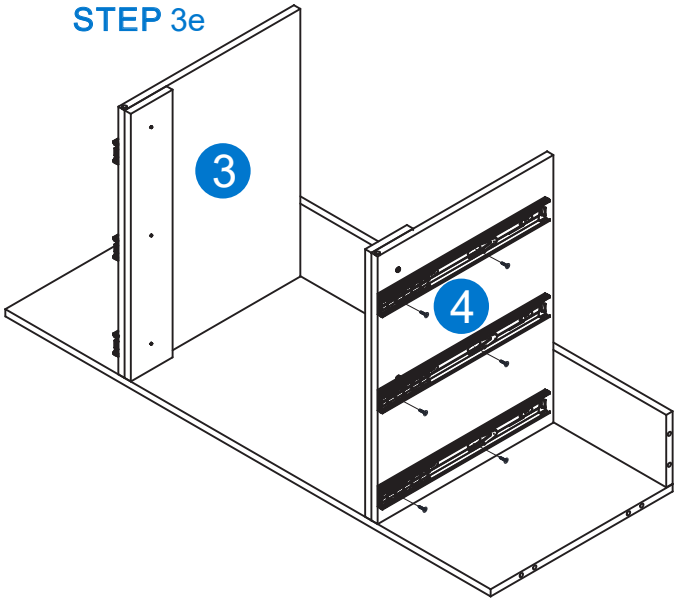

STEP 3f

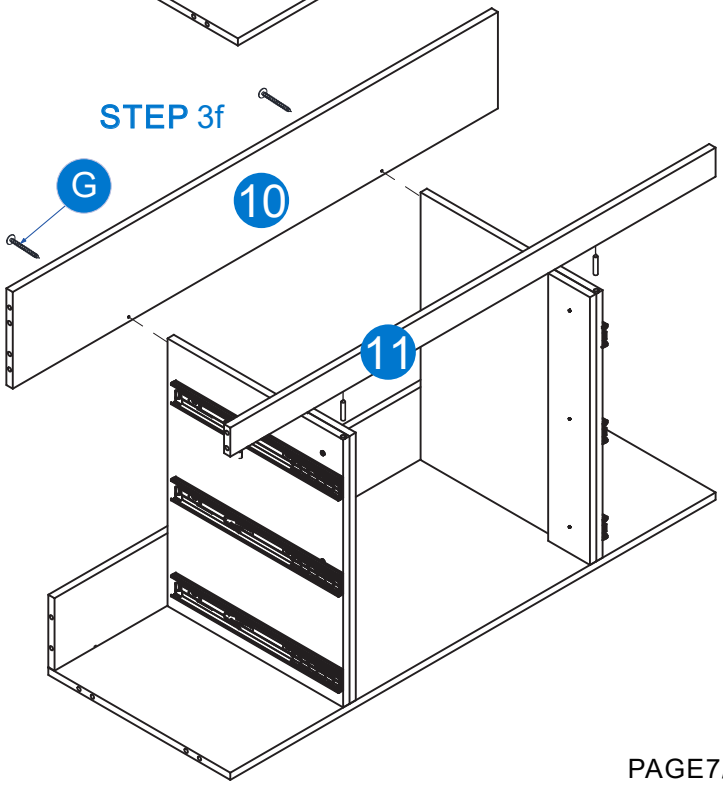

STEP 4

STEP 4a

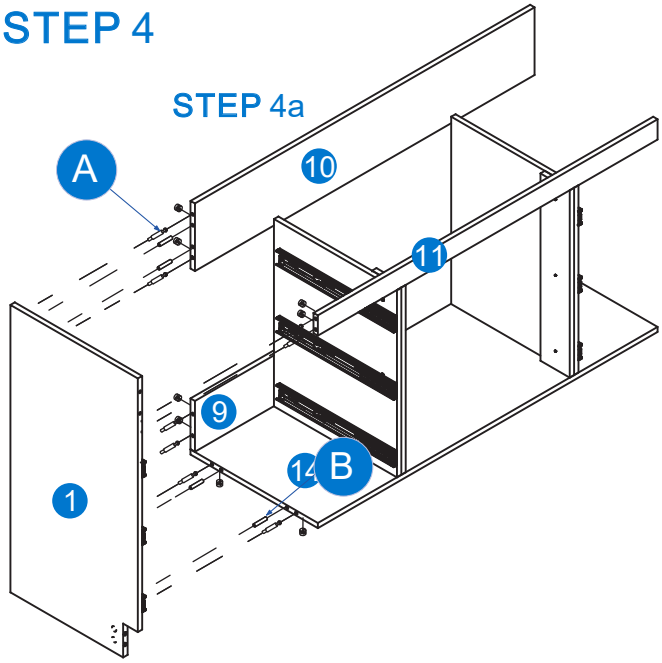

STEP 4b

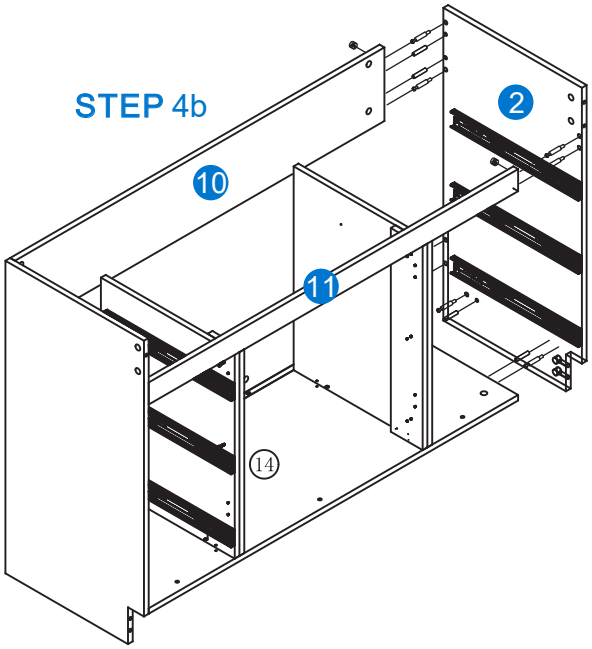

STEP 4c

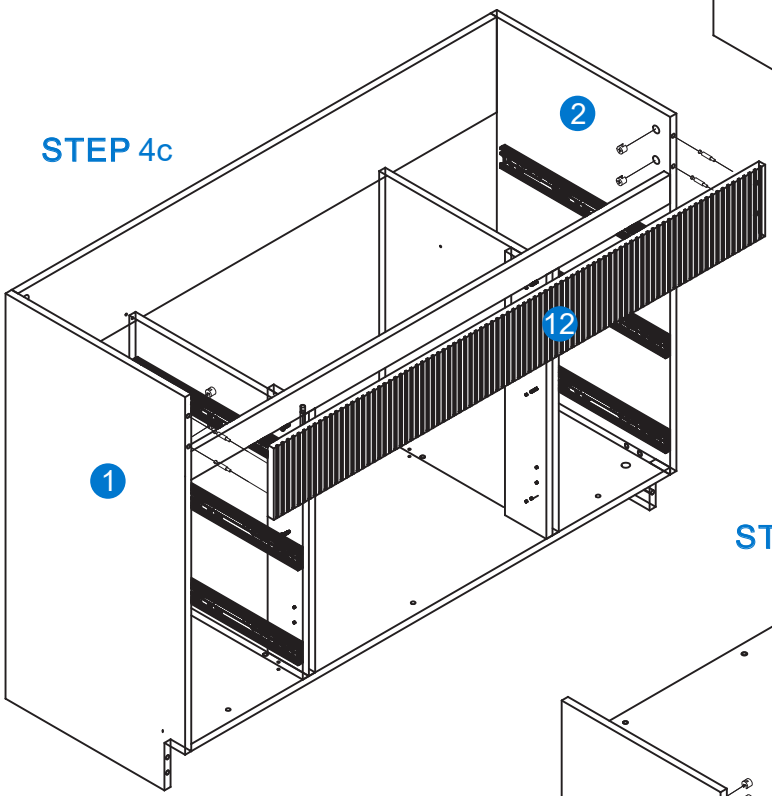

STEP 4d

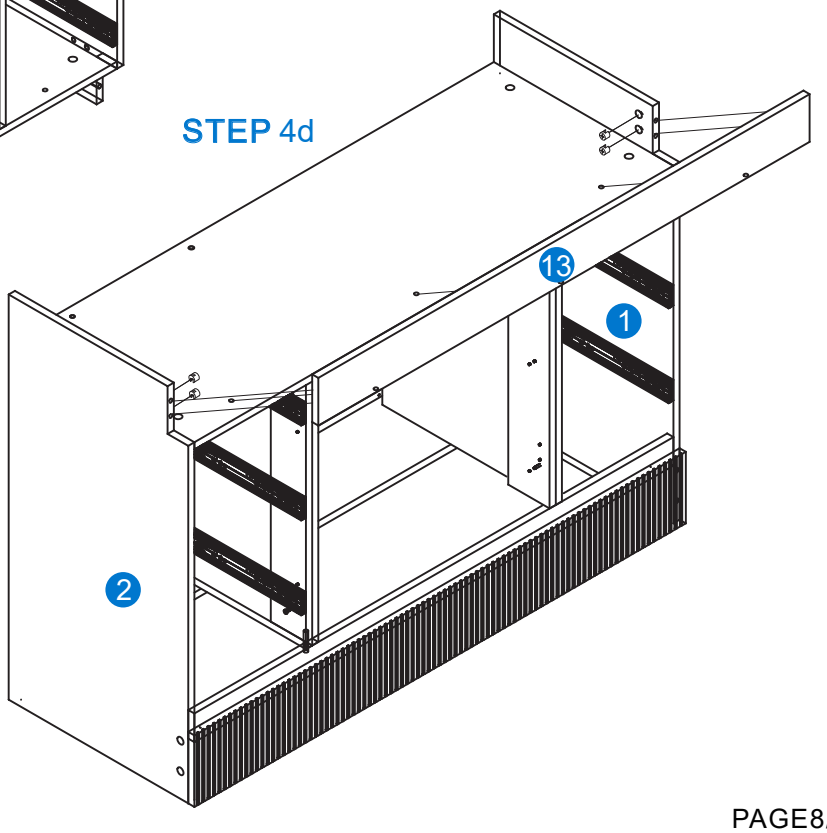

ASSEMBLYINSTRUCTIONFOR
MODEL:VANITY-NO SINK-ELY48

STEP 5

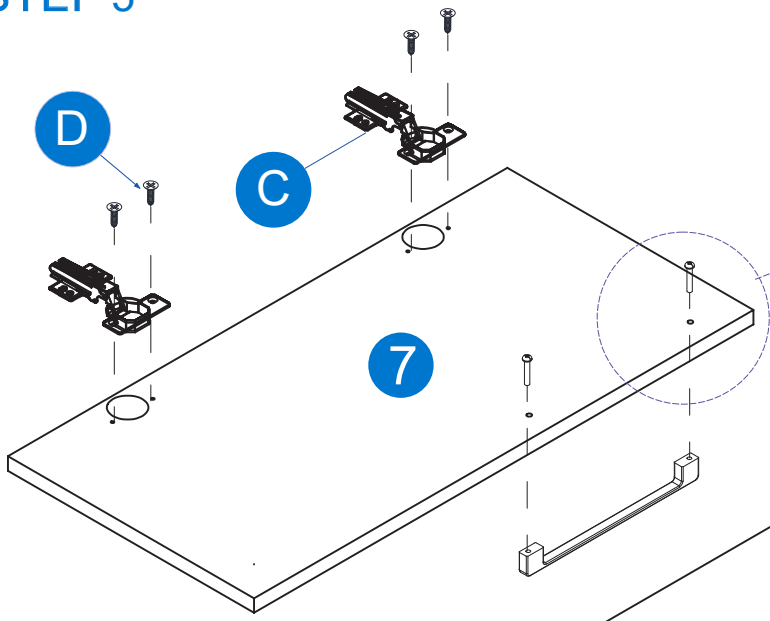

STEP 5a

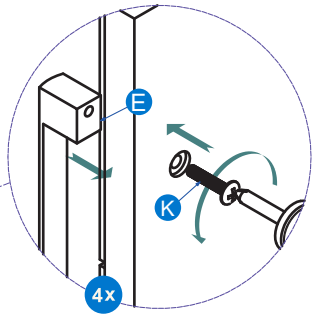

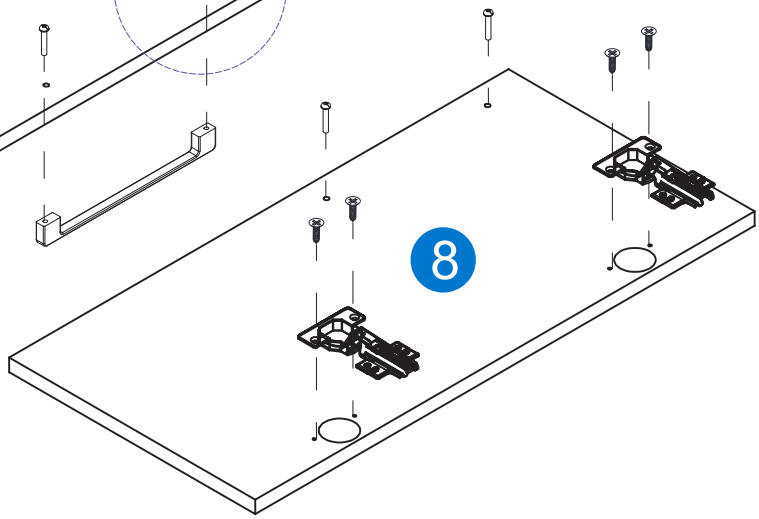

STEP 5b

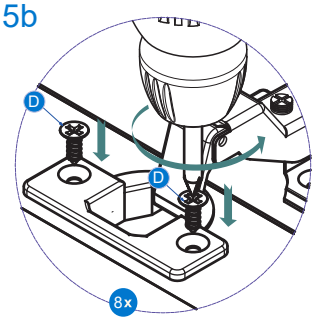

STEP 5c

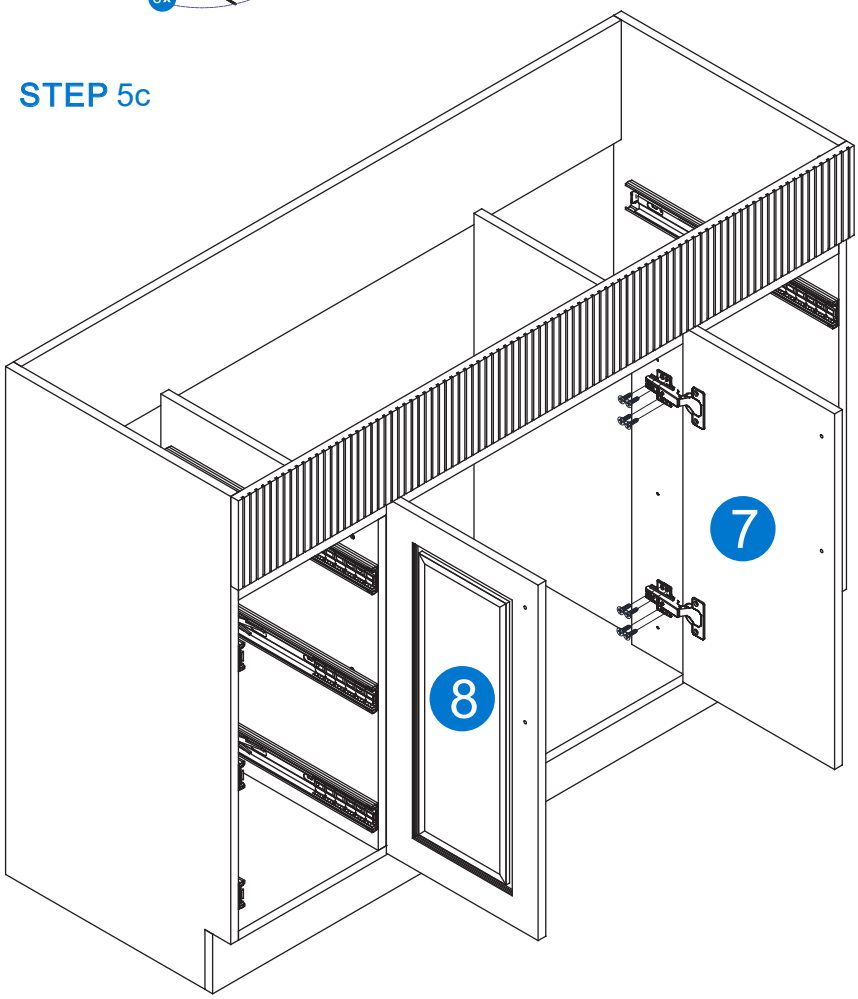

DOOR ADJUSTMENT

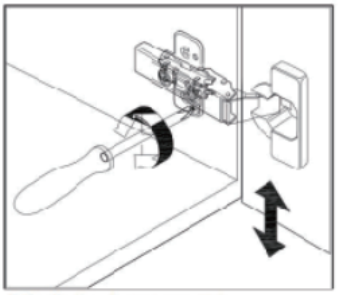

Adjusts the door vertically

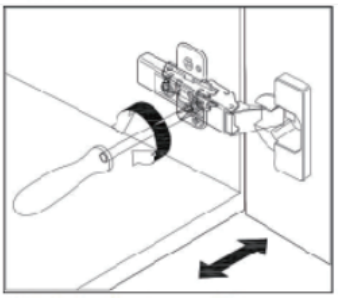

Adjusts the door horizontaly

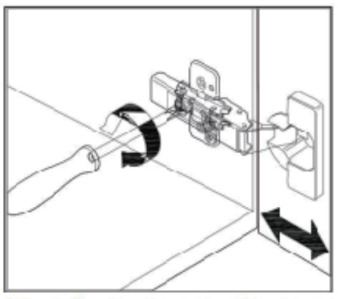

Adjusts the door forward and backwards

STEP 6

STEP 6a

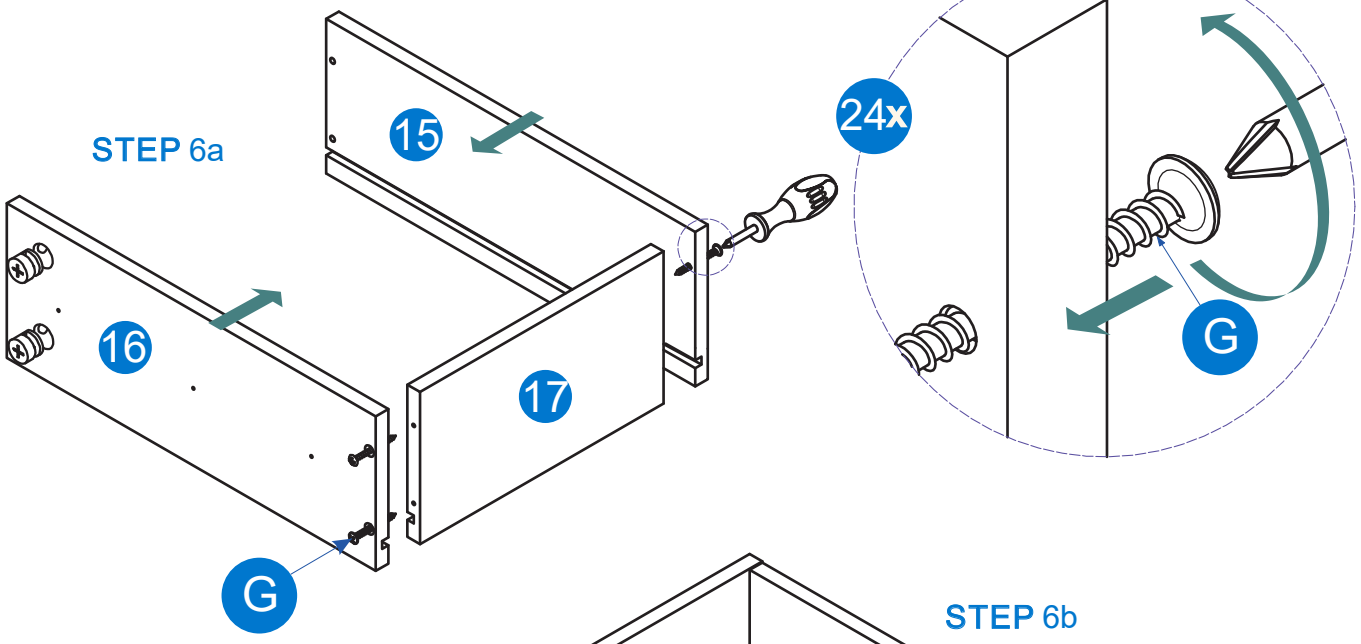

STEP 6b

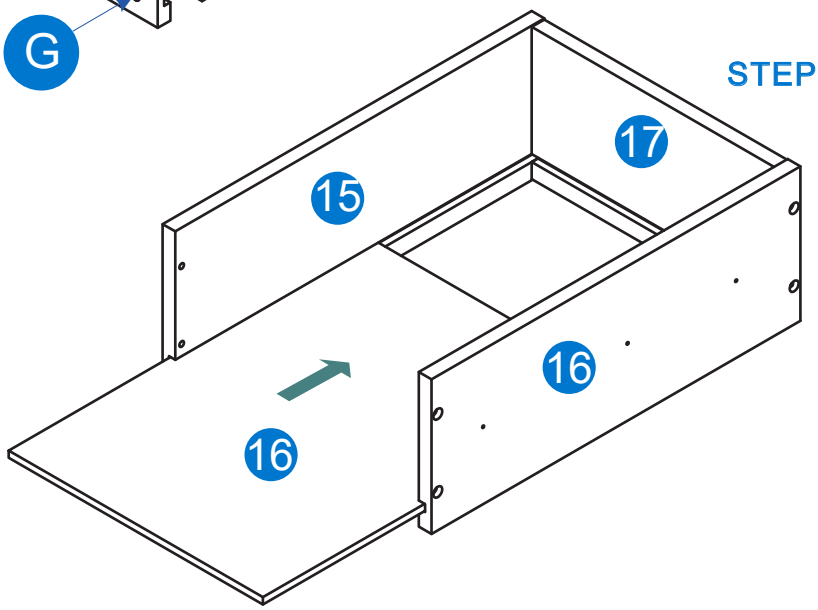

STEP 6c

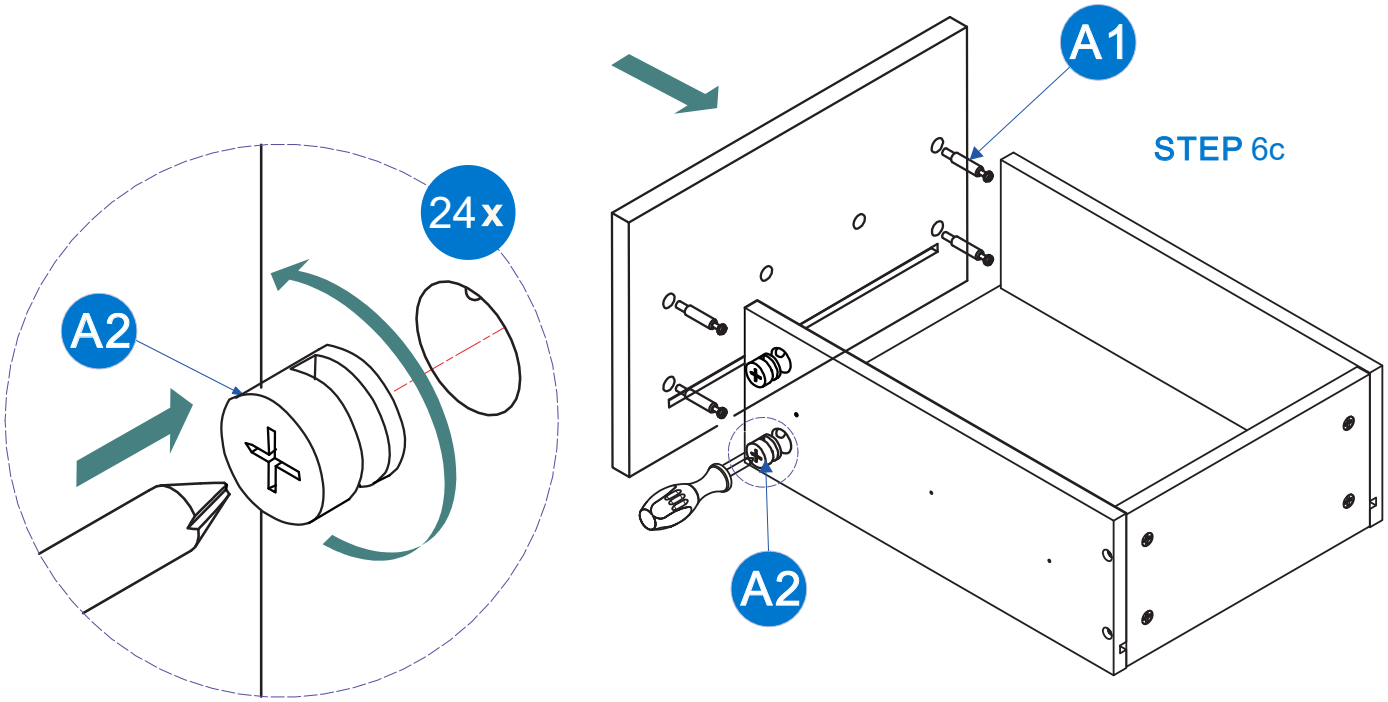

STEP 7

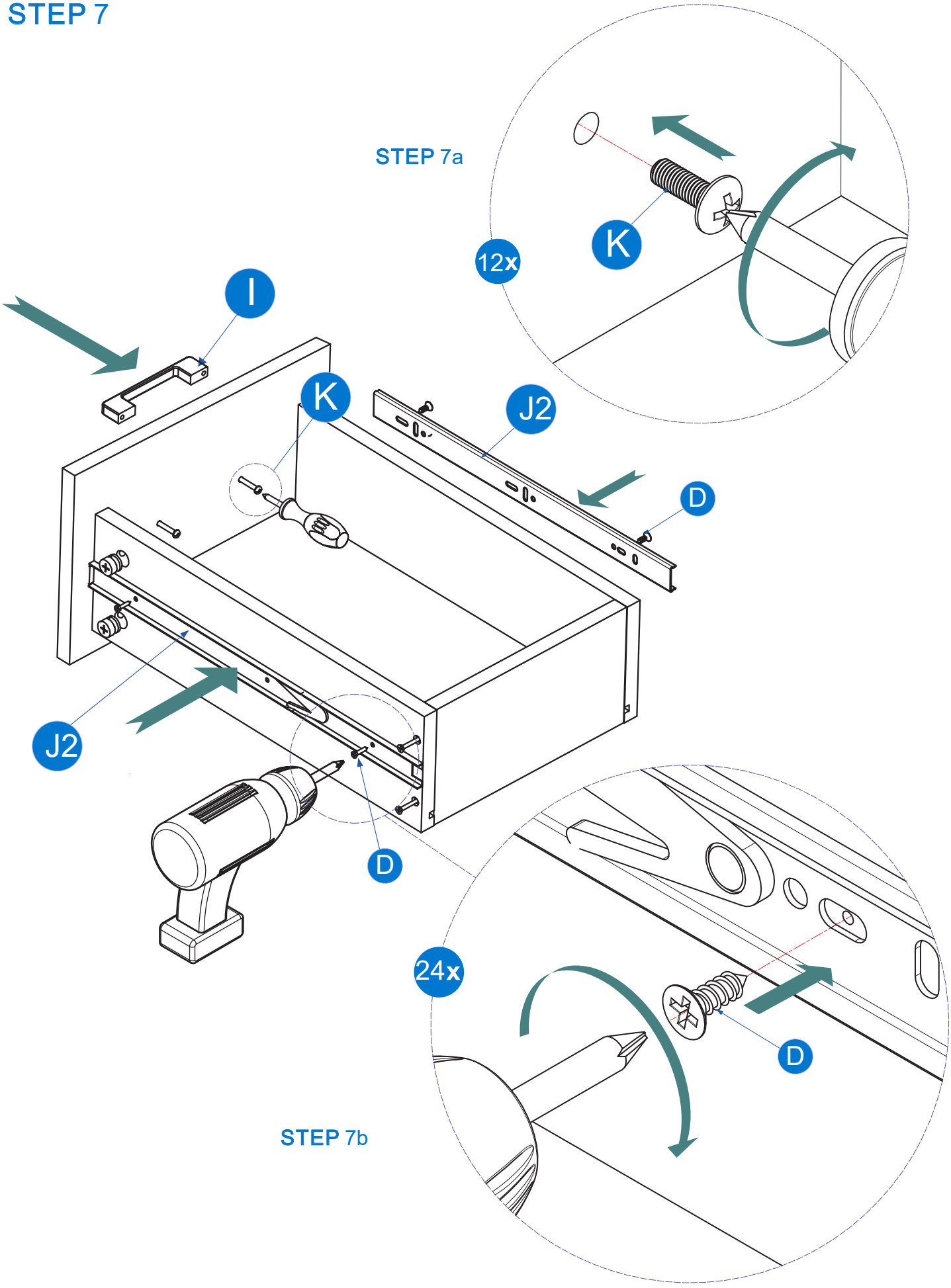

STEP 8

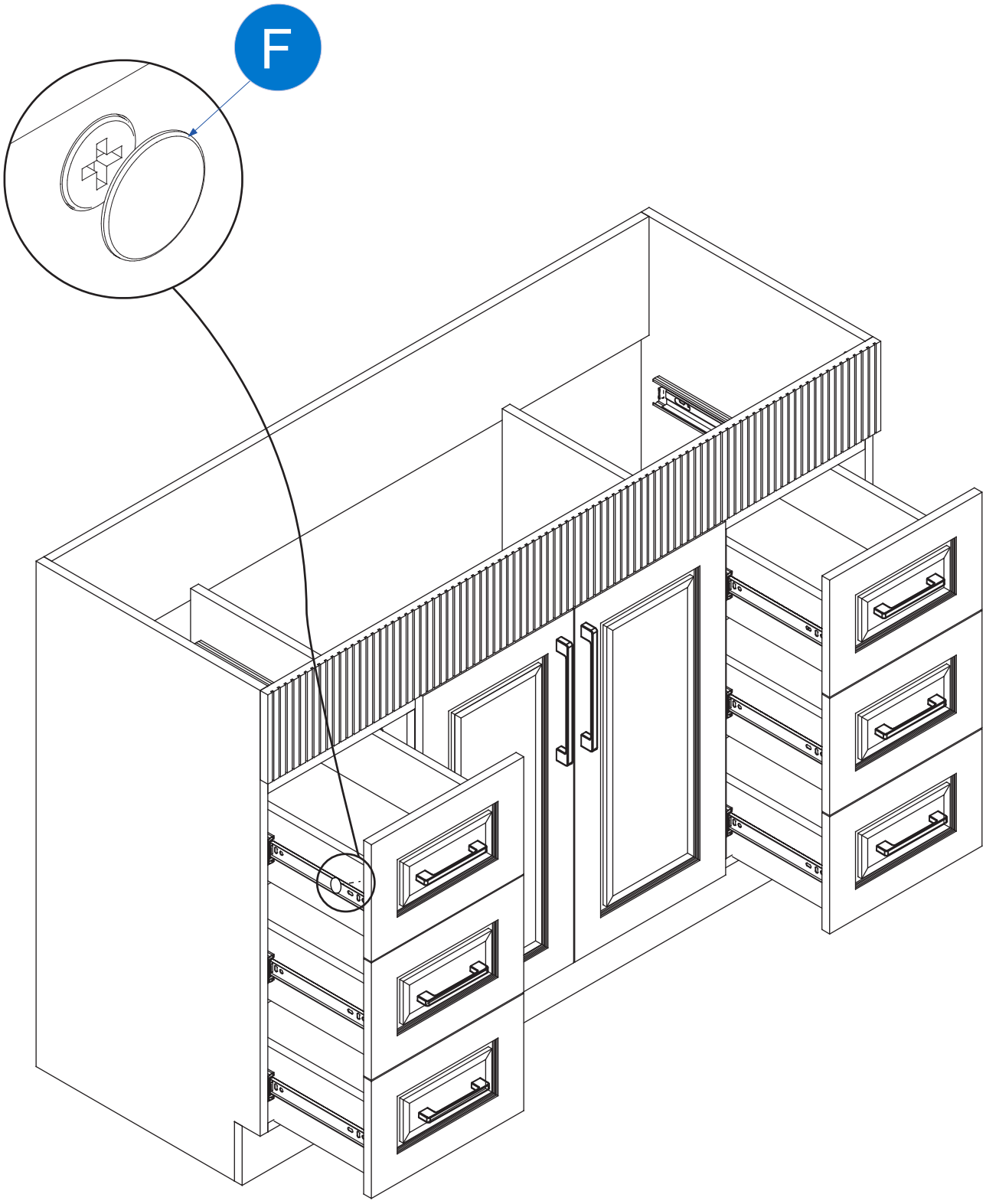

STEP 9

