ASSEMBLY INSTRUCTION

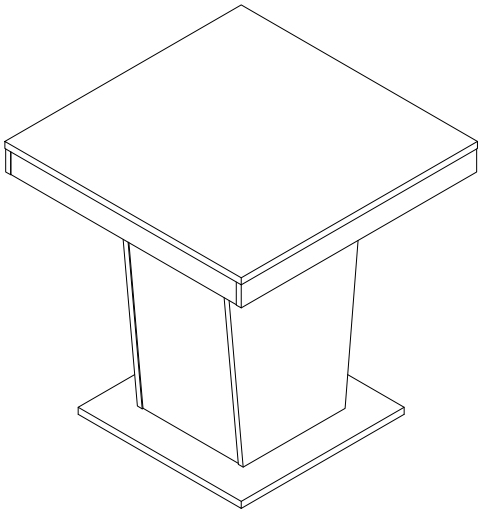

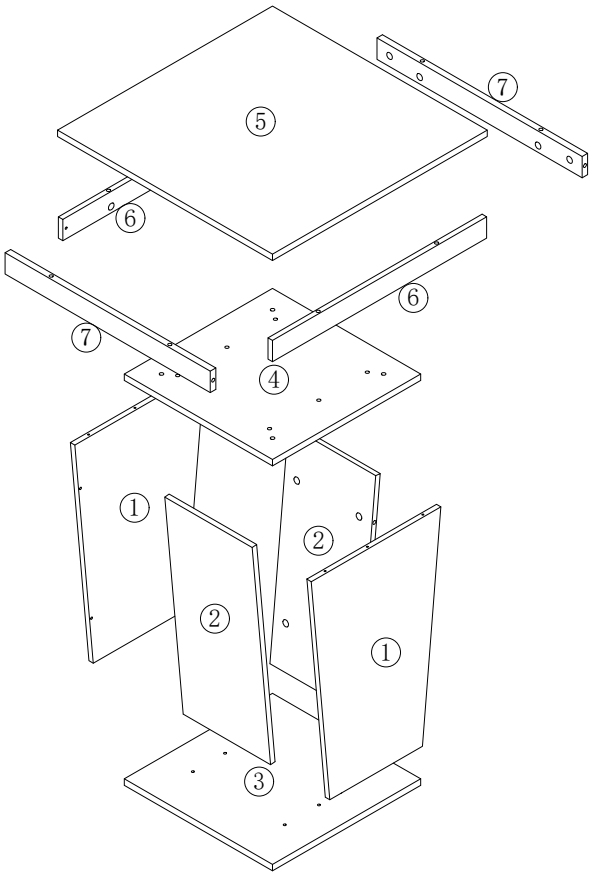

ASSEMBLY INSTRUCTION

① 2PCS 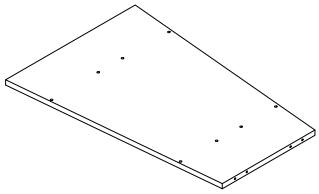	② 2PCS 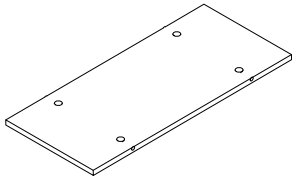	③ 1PC 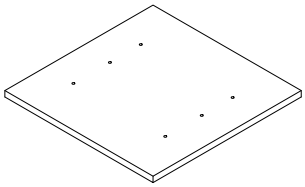	④ 1PC 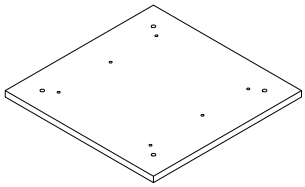
⑤ 1PC 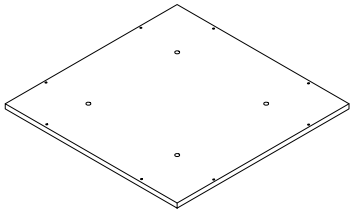	⑥ 2PCS 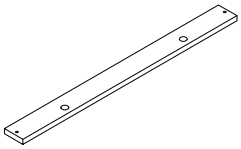	⑦ 2PCS 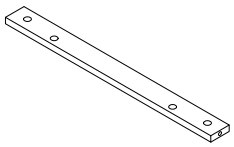	1PC

ASSEMBLY INSTRUCTION

A 20PCS  M6*40	B 20PCS  ϕ15*9.5	C 12PCS 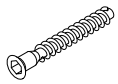 M5*38	D 4PCS  M6*25
E 4PCS  40*20*2	F 20PCS 	 M3  M4 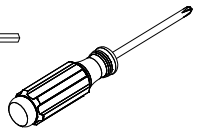	

Tools Required:



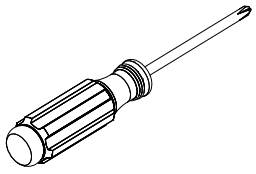

(Not included)

ASSEMBLY INSTRUCTION

Installation of Cams and Pins

Screw the pin into the hole. To set the cams correctly, ensure that the arrow on the cam is opening to the hole of the pin it is locking. Lock the cam by turning the cam head with a screwdriver until it is tightened. Please do not use an electric screwdriver to assemble the unit.

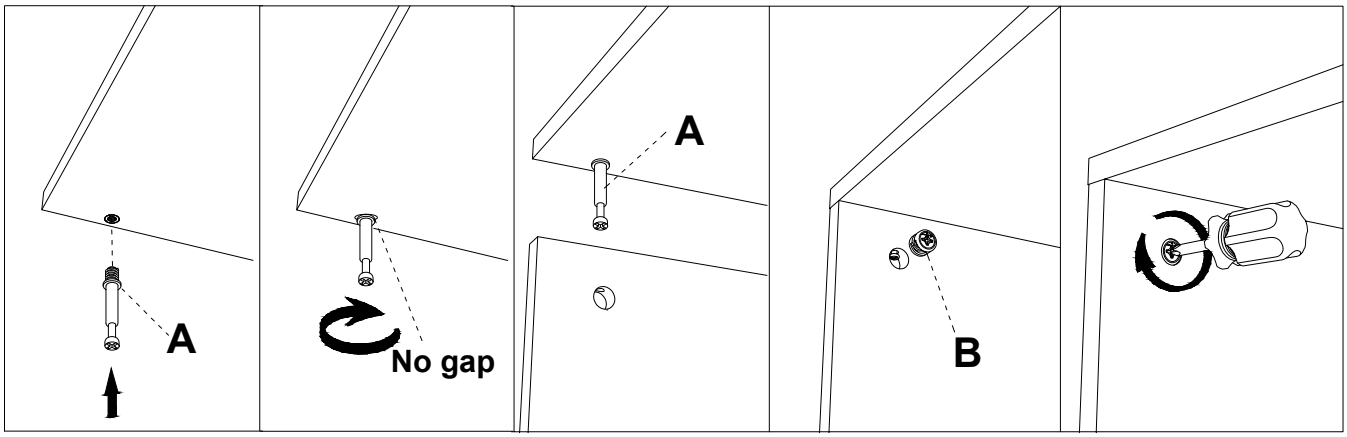

Read each step carefully before starting. It is very important that each step of instruction is performed in the correct order. If these steps are not followed in sequence, assembly difficulties will occur.

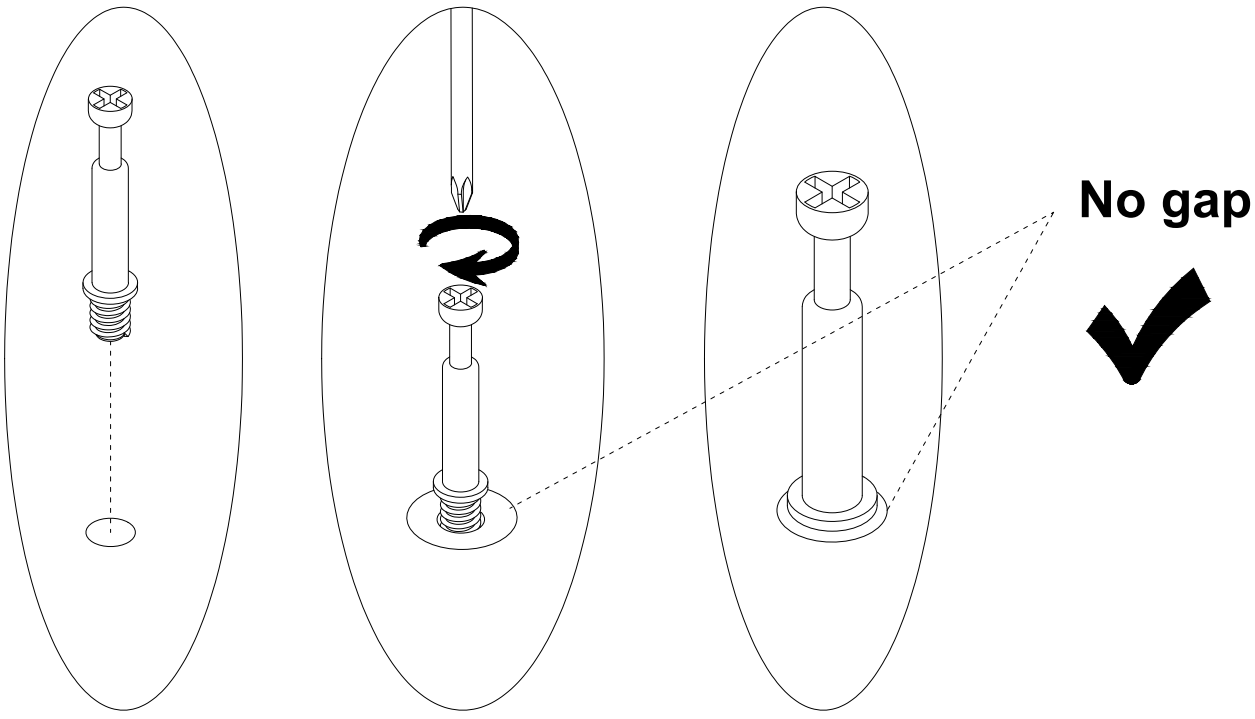

ASSEMBLY INSTRUCTION

Step 1

A 20PCS

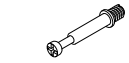

M6*40

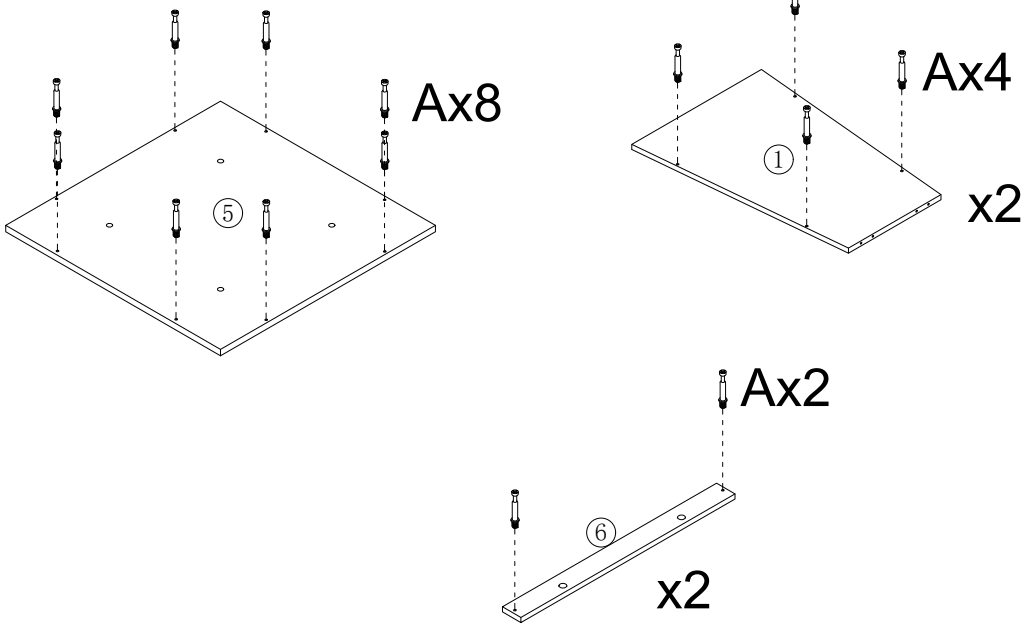

Step 2

B 8PCS



Ø15*9.5

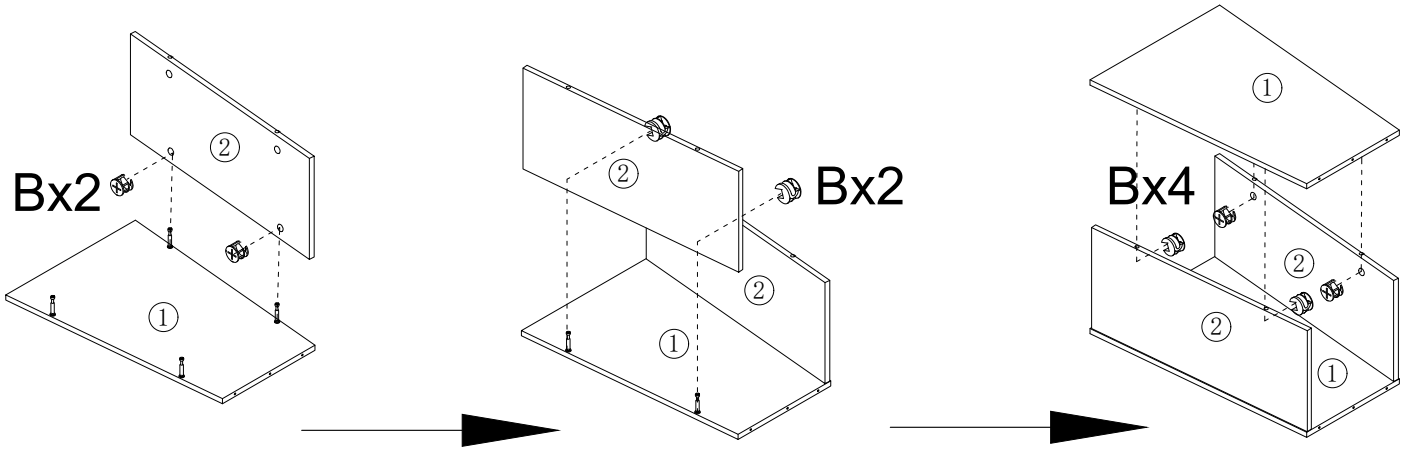

ASSEMBLY INSTRUCTION

Step 3

C 6PCS



M5*38

E 4PCS



40*20*2

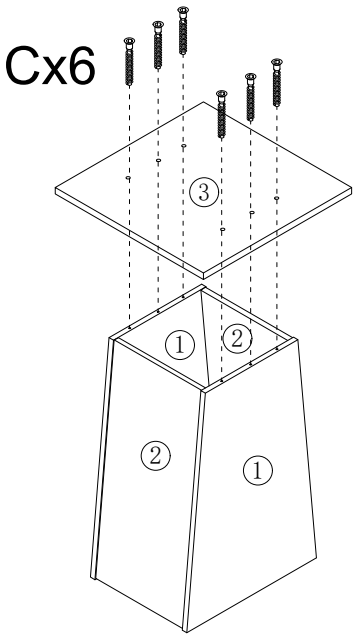

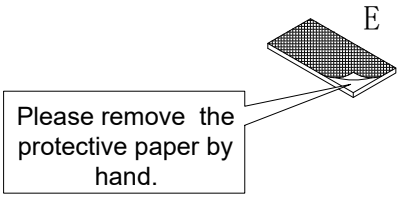

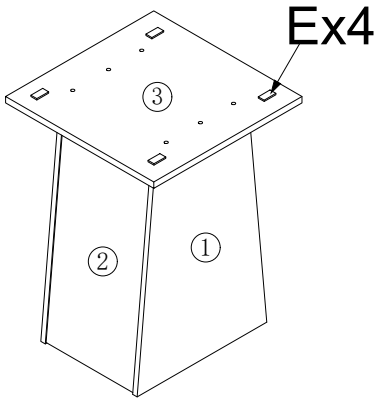

Step 4

C 6PCS



M5*38

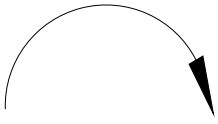

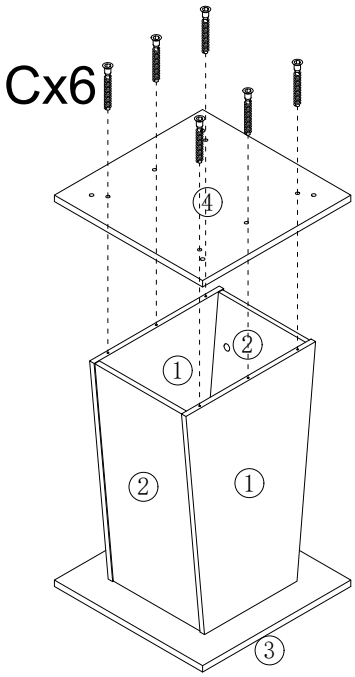

ASSEMBLY INSTRUCTION

Step 5

B 12PCS



Ø15*9.5

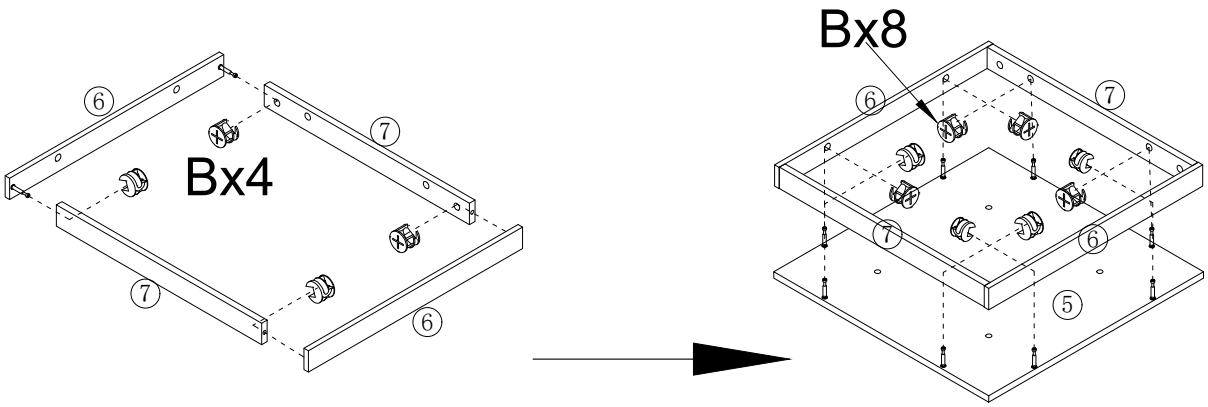

Step 6

D 4PCS



M6*25

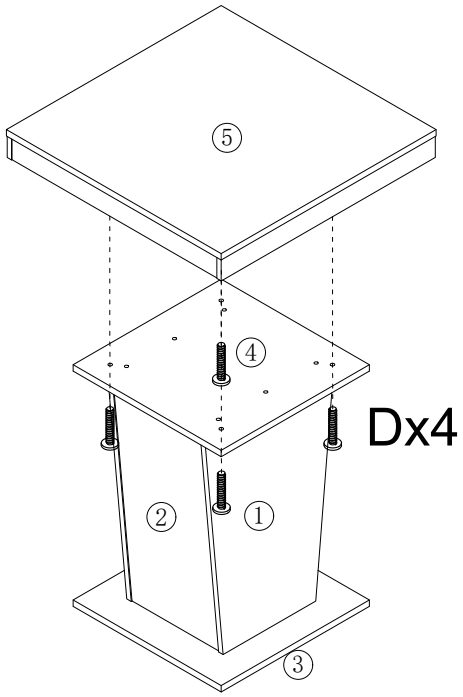

ASSEMBLY INSTRUCTION

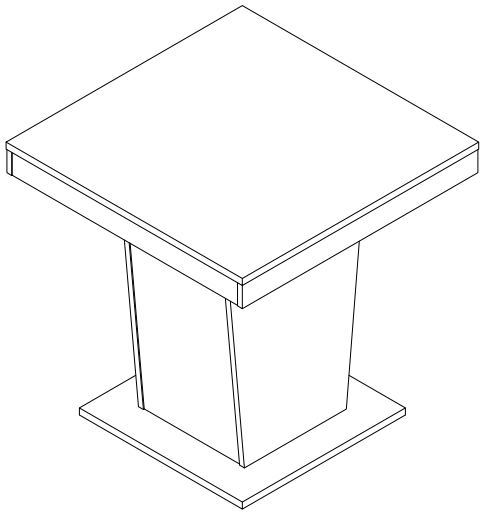

OK

Contact our customer service team

fbm.13579@outlook.com

1-888-200-6302
1-888-885-4112

Working time: Monday-Friday 10 AM-7 PM (PDT) / 11 AM-8 PM (PST)