THE BED
ASSEMBLY INSTRUCTIONS

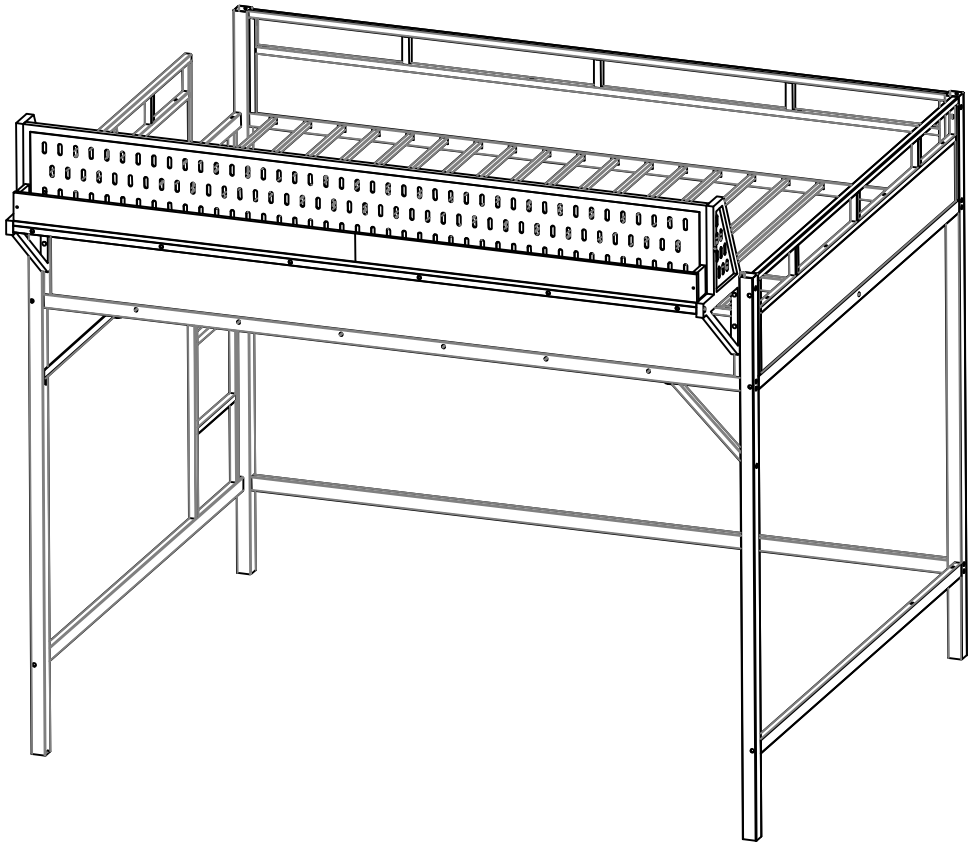

Attention

Please use the screws correctly according to the instructions. Thank you.

SAFETY WARNINGS AND GENERAL NOTES:

1. Follow the information on the warnings on the bunk bed end structure and on the carton. Do not remove the warning label from the bed.
2. Always use the recommended size mattress on mattress support, or both, to help prevent the likelihood of entrapment or falls.
3. Do not allow children under 6 years of age to use the upper bunk.
4. Periodically check and ensure the guardrail, ladder and other components are in their proper position, free from damage, and all connectors are tight.
5. Do not allow horseplay on or under beds.
6. Always prohibit jumping on the bed.
7. Prohibit more than one person on upper bunk.
8. Always use the ladder for entering and leaving the upper bunk.
9. Do not use substitute parts. Contact the manufacturer or dealer for replacement parts.
10. Use of a night-tight may provide added safety precaution for a child using the upper bunk.
11. Always use guardrails on both long sides of the upper bunk.
12. If the bunk bed will be placed next to a wall, the guardrail that runs the full length of the bed should be placed against the wall to prevent entrapment between the bed and the wall.
The use of water or sleep flotation mattresses is prohibited.
13. **STRANGULATION HAZARD**-Never attach or hang items to any part of the bunk bed that are not designed for use with the bed; for example, but not limited to, hooks, belts and jump ropes.
14. Keep these instructions for future reference.
15. We recommend assembling your bunk bed on the shipping carton to protect your floor or carpet.
16. Be certain all staples are out of the box before beginning assembly on the shipping carton.
17. USE ONLY MATTRESSES WHICH ARE AS THE TABLE BELOW ON UPPER AND ON LOWER BUNKS.

Up bed (bunk bed and tribed included)

Mattress size	Length	Width	Thickness
QUEEN Standard	79"-80"	59"-60"	6"max

18. SURFACE OF MATTRESS MUST BE AT LEAST 5"(127MM) BELOW THE UPPER EDGE OF GUARDRAILS.
19. Replacement Parts:
Replacement Parts, including additional guardrails, may be obtained from any of our dealers.

Bed parts view

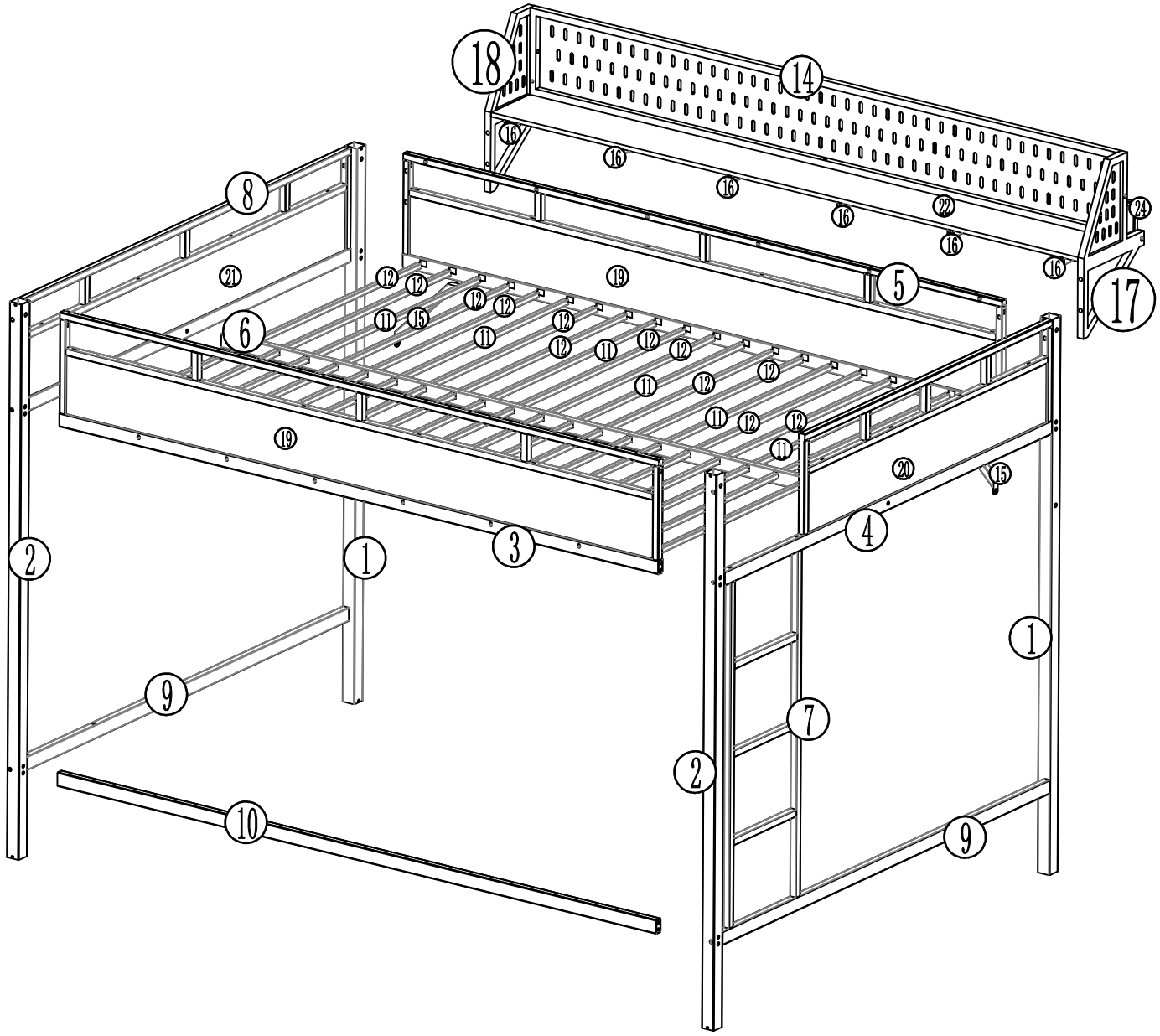

Part List

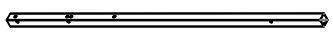 1-2pcs	 2-2pcs	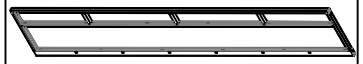 3-1pcs	 4-1pcs	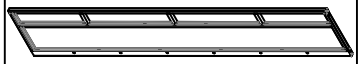 5-1pcs	 6-1pcs
 7-1pcs	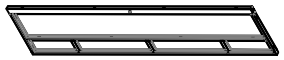 8-1pcs	 9-2pcs	 10-1pcs	11-6pcs	12-14pcs
13-1pcs	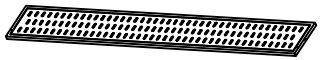 14-1pcs	 15-2pcs	 16-6pcs	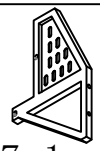 17-1pcs	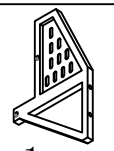 18-1pcs
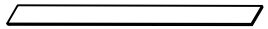 19-2pcs	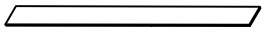 20-1pcs	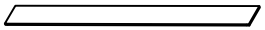 21-1pcs	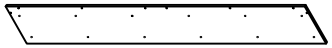 22-1pcs	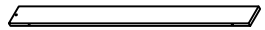 23-2pcs	 24-2pcs

Hardware List

 A 4*10-2PCS	 B-M8*15 2PCS	 D 8*55-31PCS	H 4*50-26PCS	W 4*25-14PCS	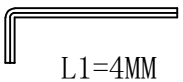 L1=4MM	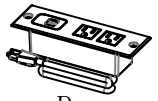 P Socket-1pcs	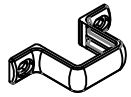 U 2PCS
 K-40PCS	 C 8*35-24PCS	 F 8*18-15PCS	G 4*35-22PCS	 E 6*25-13PCS	 L2=5MM  M	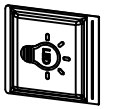 Q Light strips 1pcs	T 4PCS

Step 1

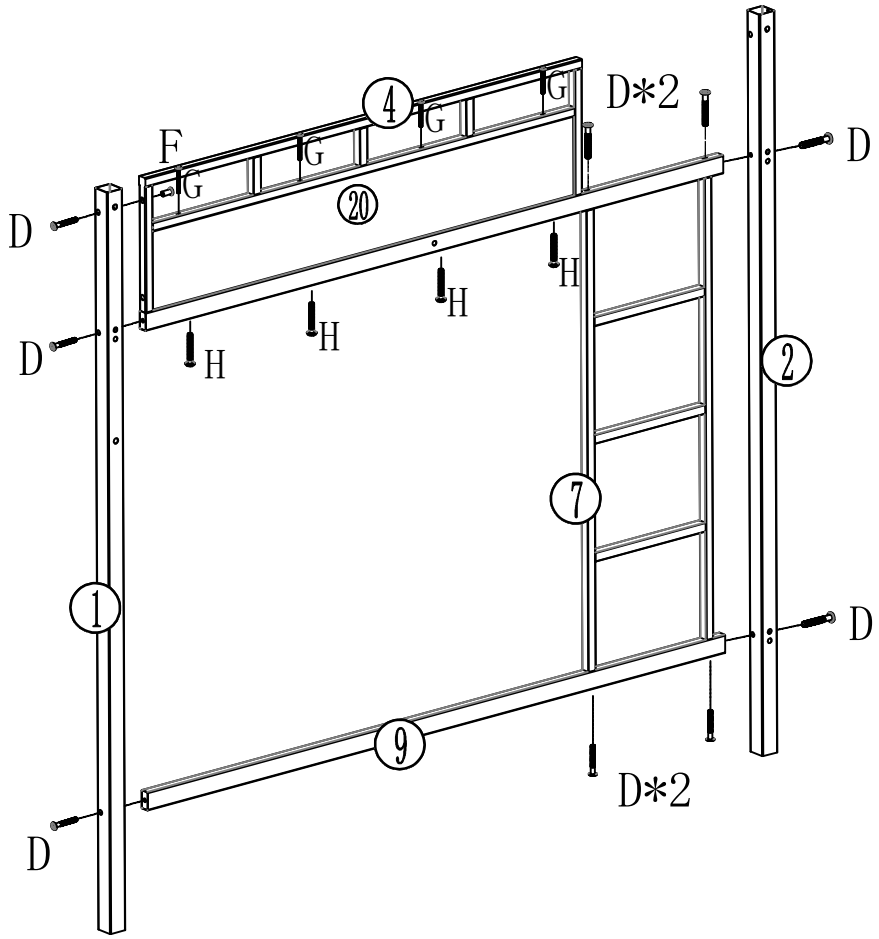

D 8*55-9PCS	F 4*18-1PCS	H 4*50-4PCS	G 4*35-4PCS	L M	D 8*55-6PCS	F 4*18-2PCS	H 4*50-4PCS	G 4*35-4PCS	L M

Step 2

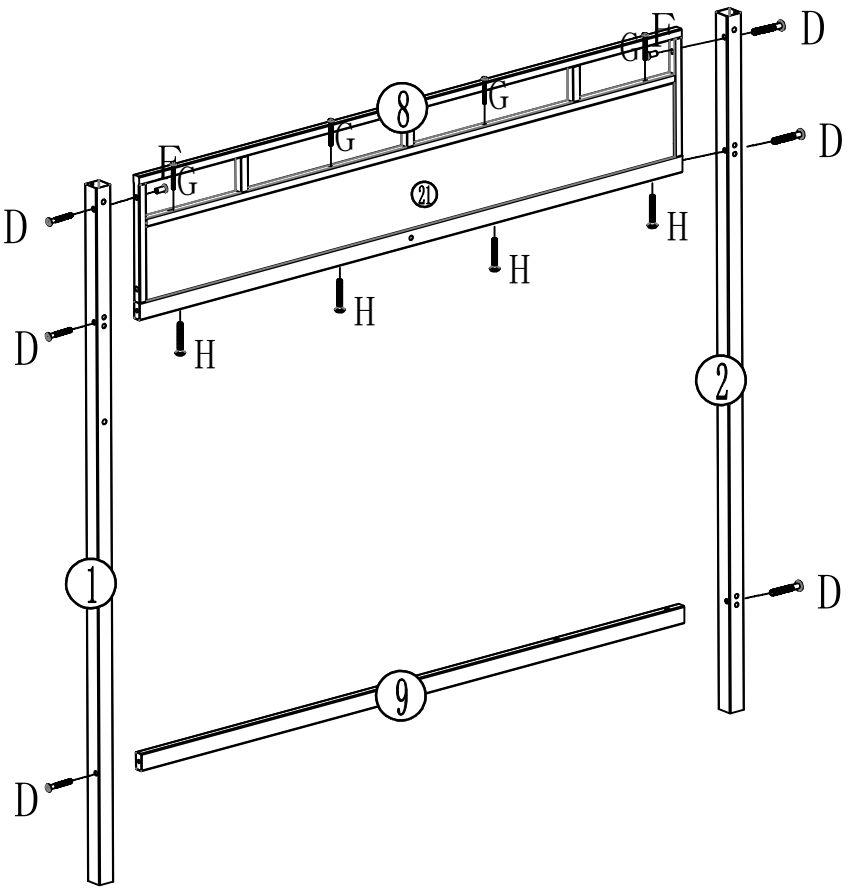

Step 3

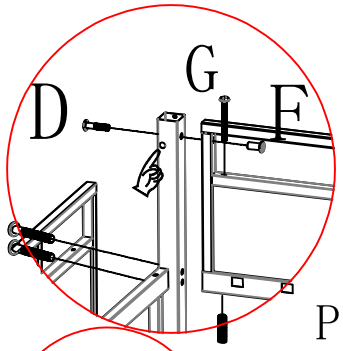

Attention

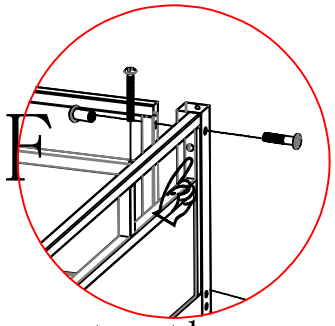

Pay attention to the position of this hole.

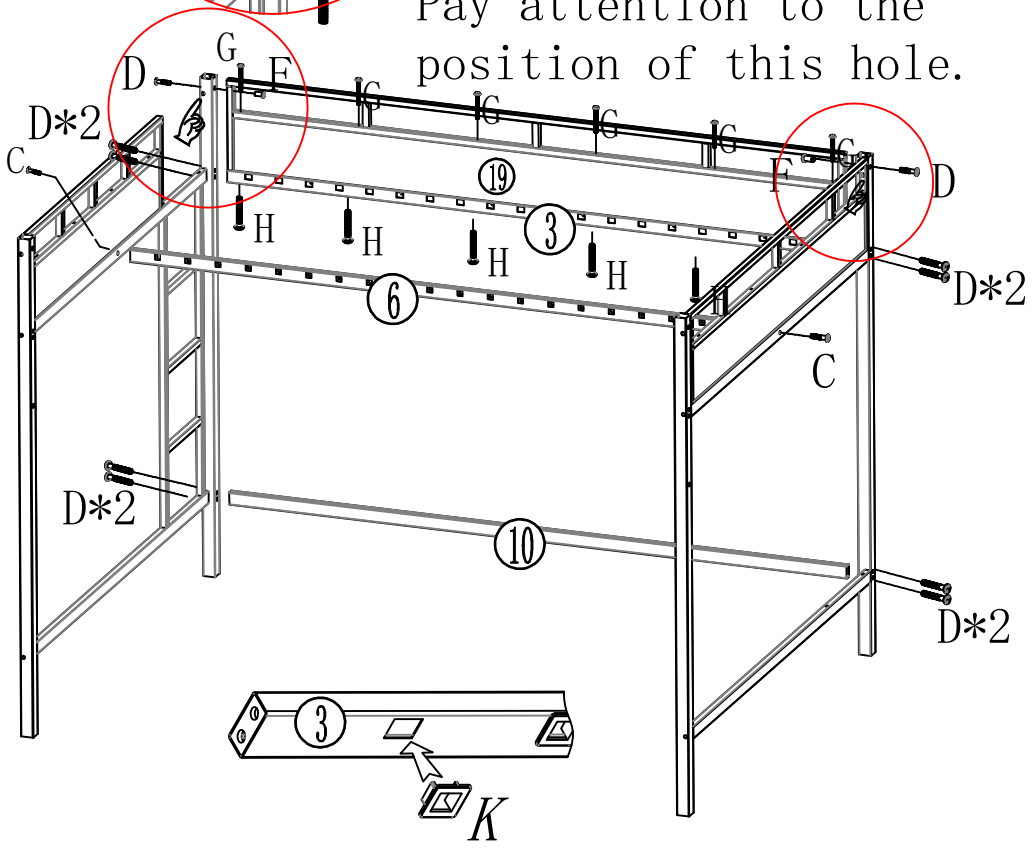

 D 8*55-10PCS	F 4*18-2PCS	 C 8*35-2PCS	H 4*50-6PCS	G 4*35-6PCS	 L  M

Step 4

Swapping No. 4 and No. 8 can achieve the effect of exchanging the left and right sides of the ladder.

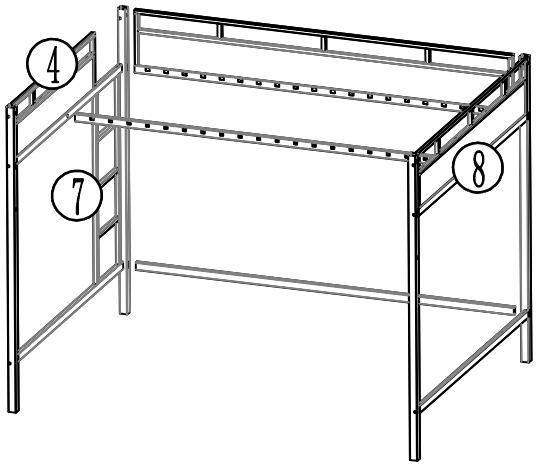

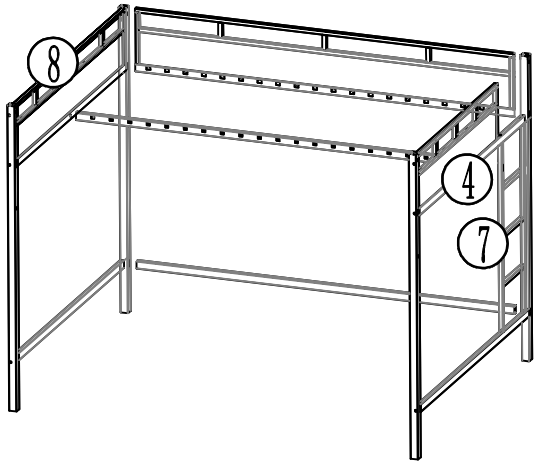

Step 5

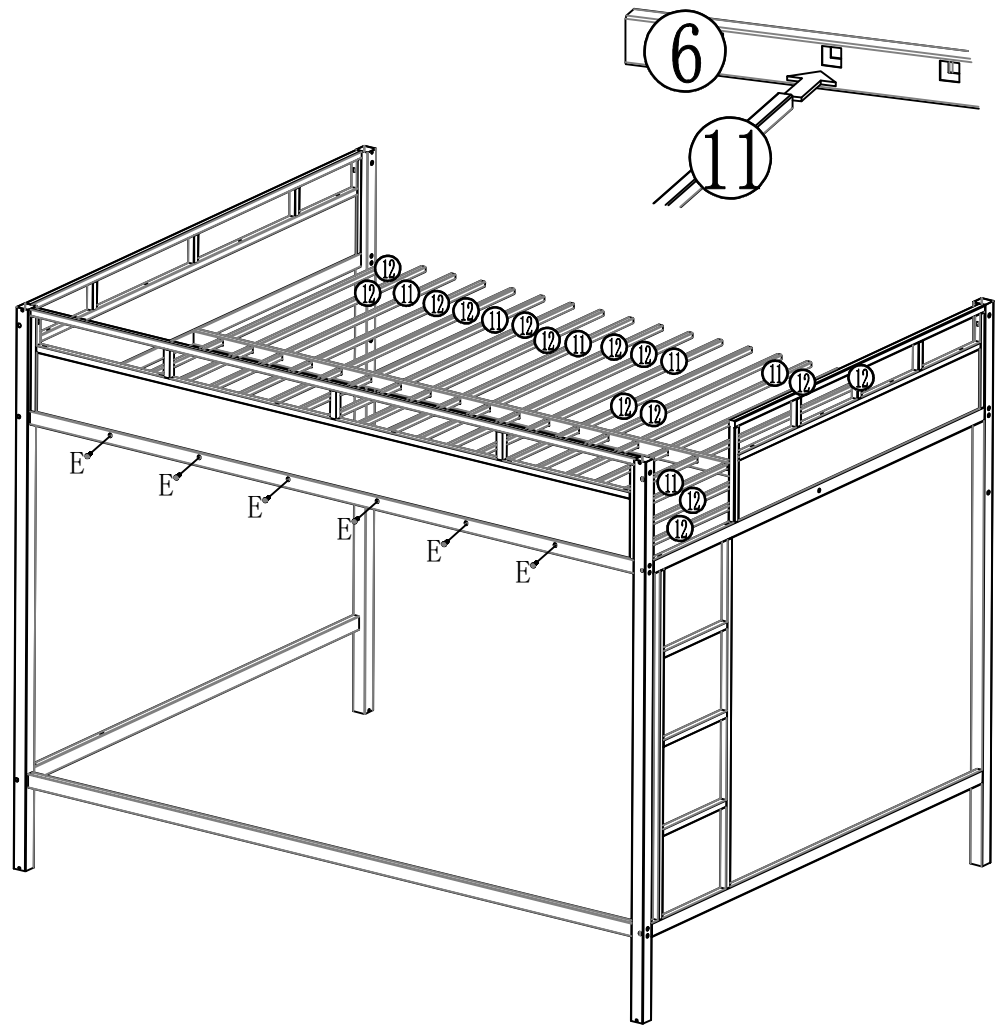

Step 6

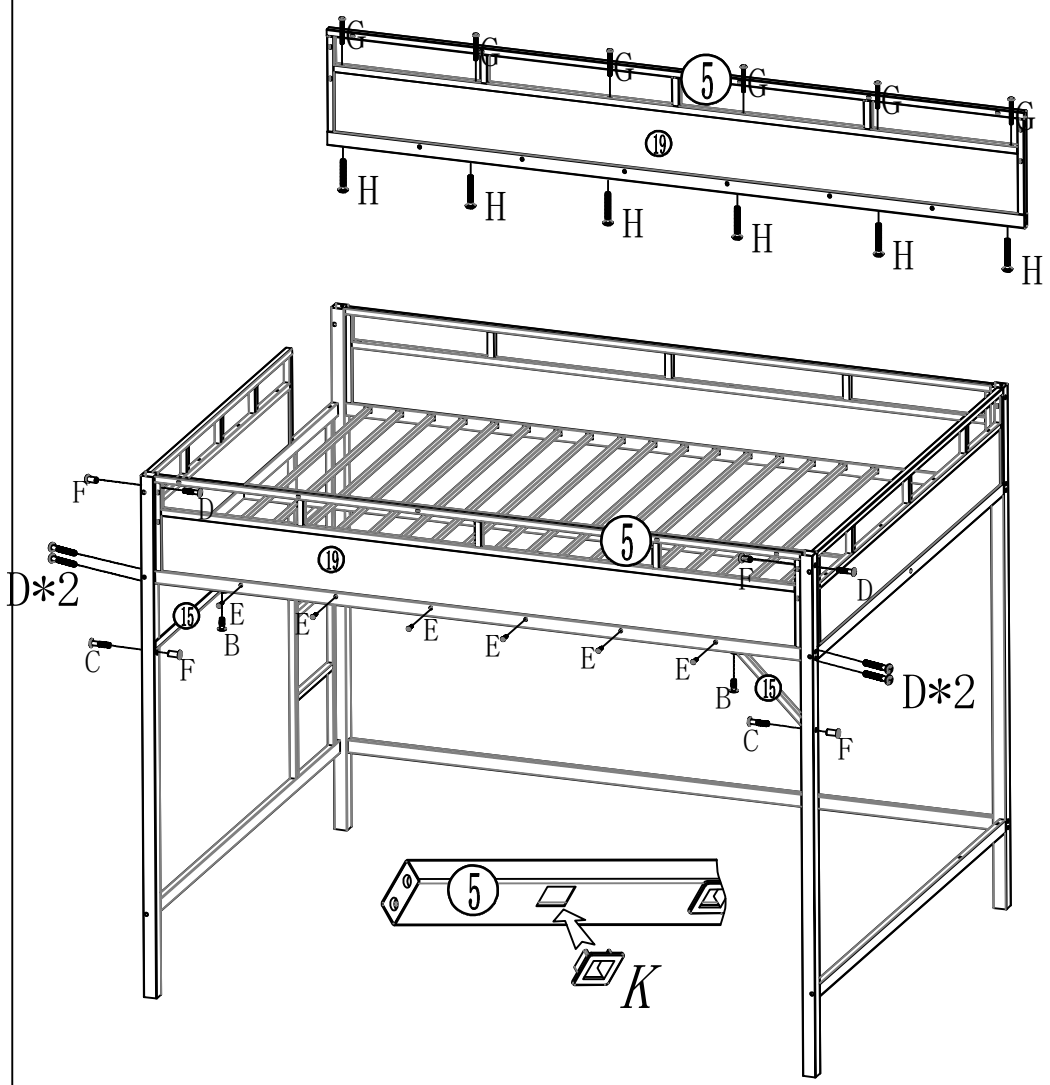

E 6*25-6PCS	L

D 8*55-6PCS	F 4*18-4PCS	C 8*35-2PCS	E 6*25-6PCS	B-M8*15 2PCS	H 4*50-6PCS	L
					G 4*35-6PCS	M

Step 7

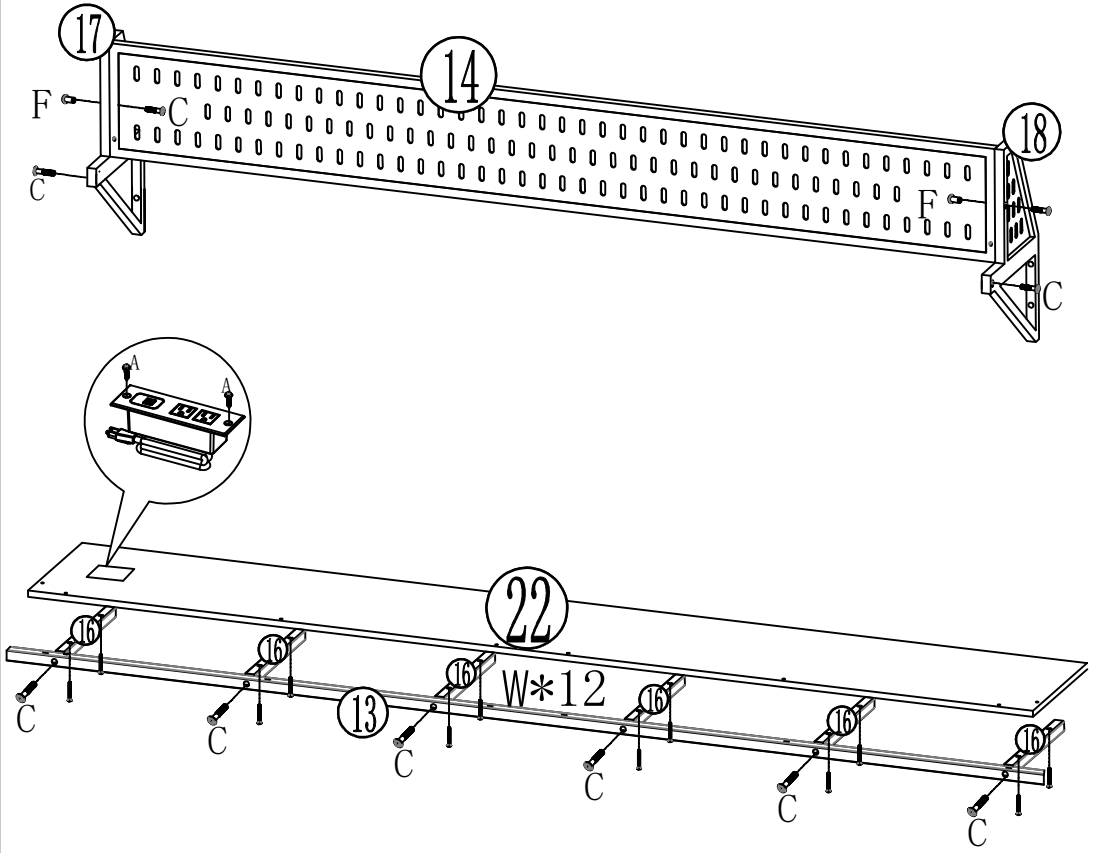

Step 8

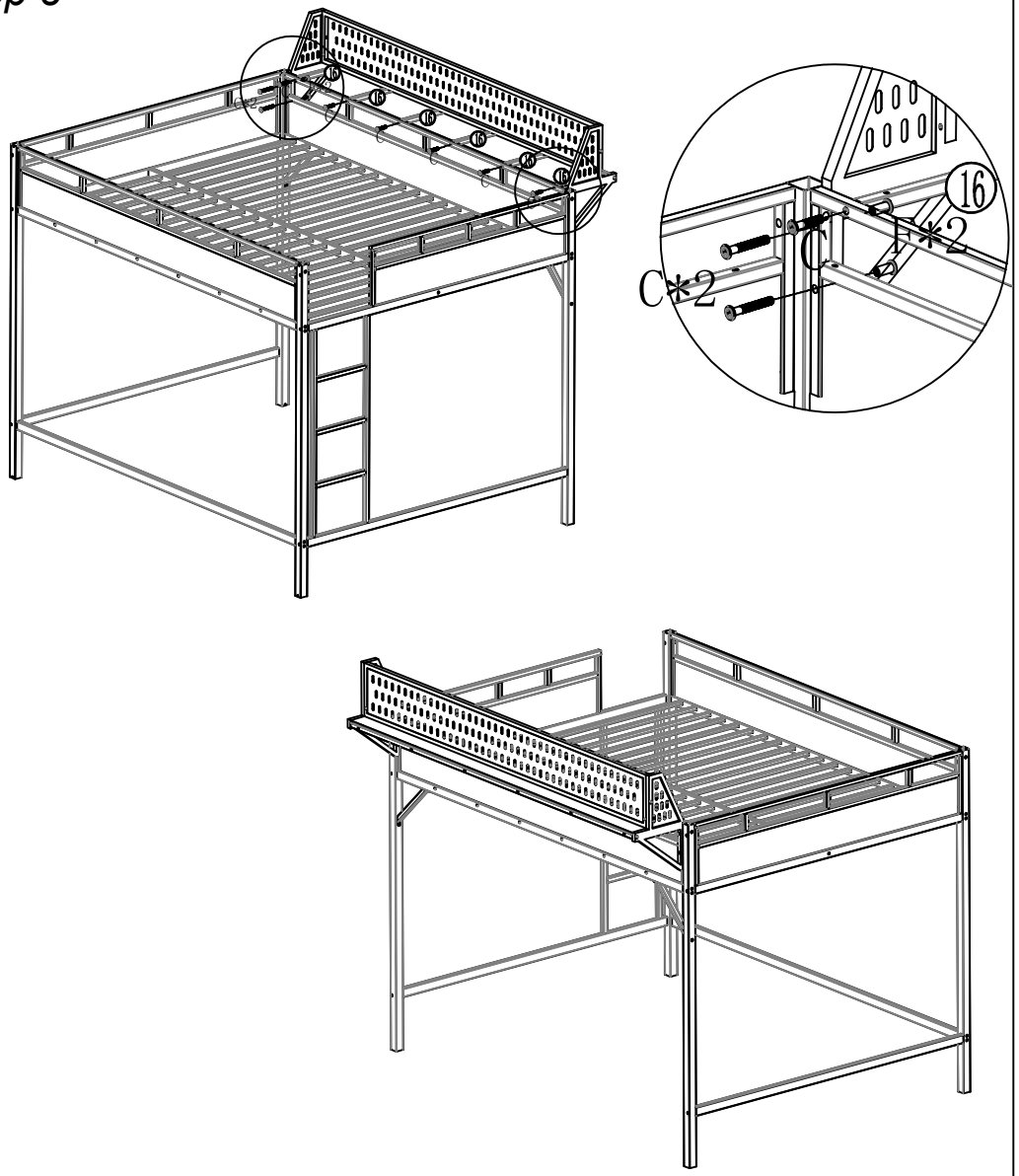

A 4*10-2PCS	F 4*18-2PCS	C 8*35-10PCS	W 4*25-12PCS	L M

F 4*18-4PCS	C 8*35-10PCS	L

Step 9

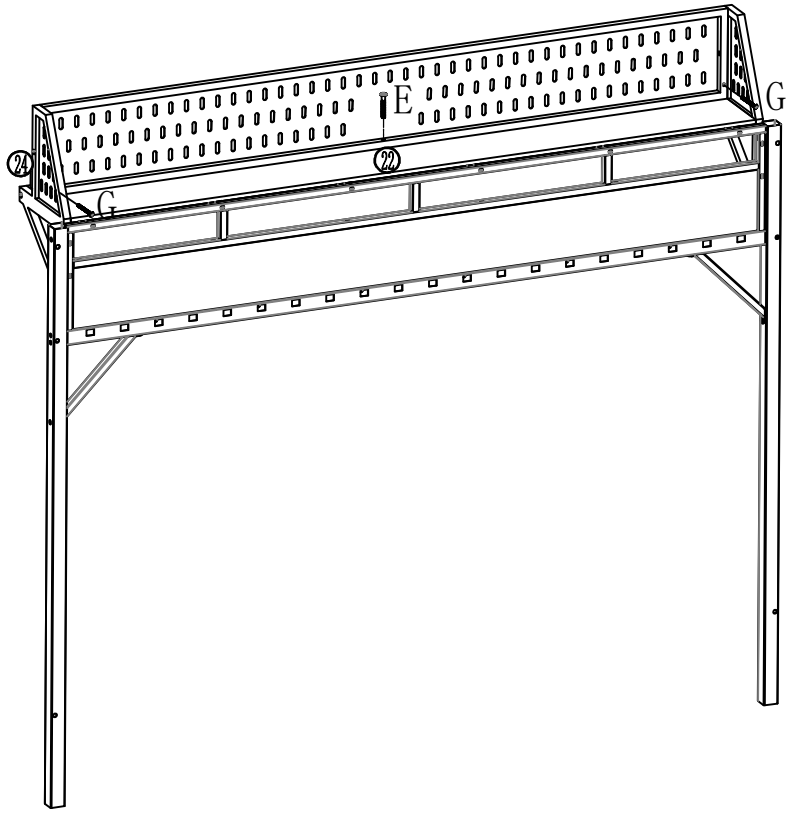

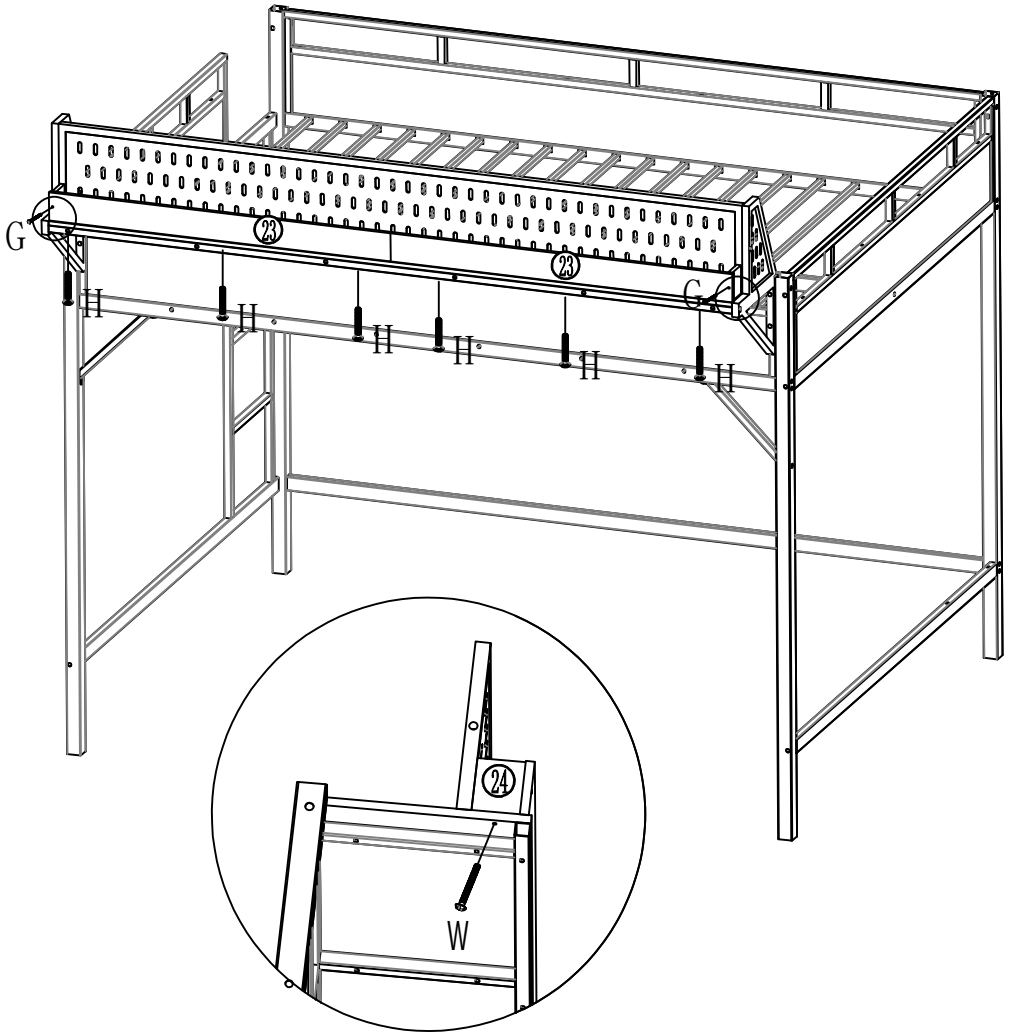

 E 6*25-1PCS	 G 4*35-2PCS	 L	 M

W 4*25-2PCS	H 4*50-6PCS	 M

The light strip is attached to the inner side of component No. 23.

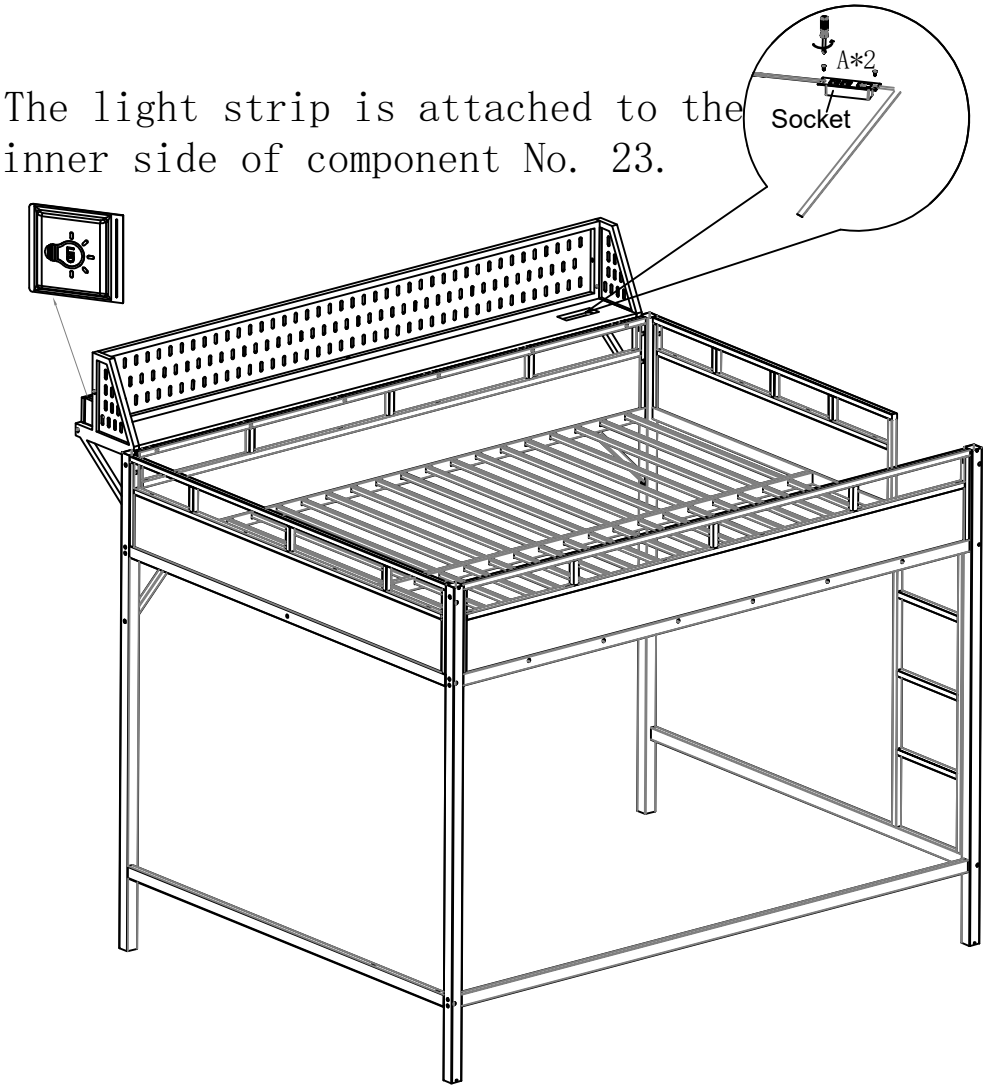

 P Socket-1pcs	 Q Light strips 1pcs	 A 4*10-2PCS	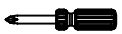 M

Completed

Tips:
If you feel that the bed is a little wobbly then please use the parts "U" and "T"for reinforcement

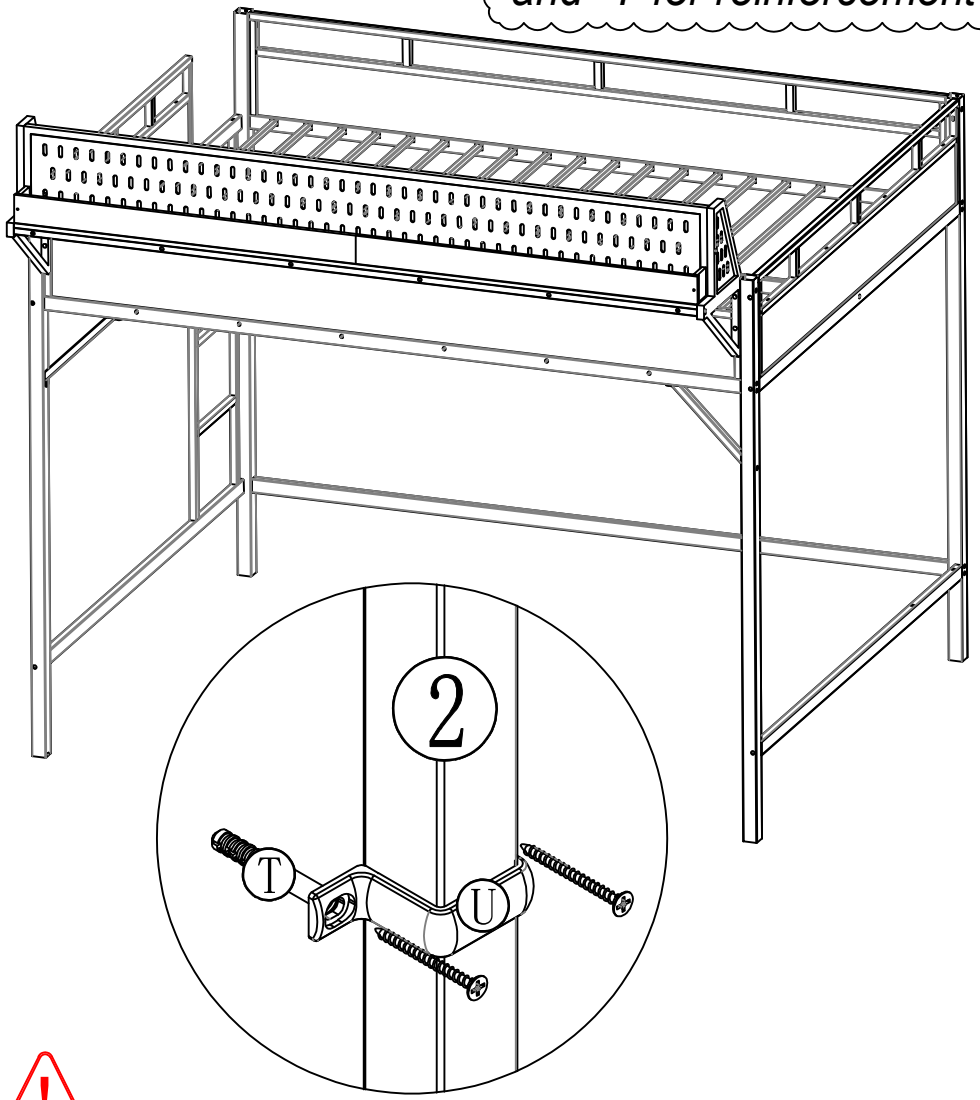

Attention

Please tighten all screws before use,thank you.