AESDR42: DOUBLE DRAWER AND STORAGE DOOR COMBINATION, 42"

HESTAN

CUTOUT DIMENSIONS:
19" H - $39\frac{7}{8}$" W - $23\frac{3}{8}$" D

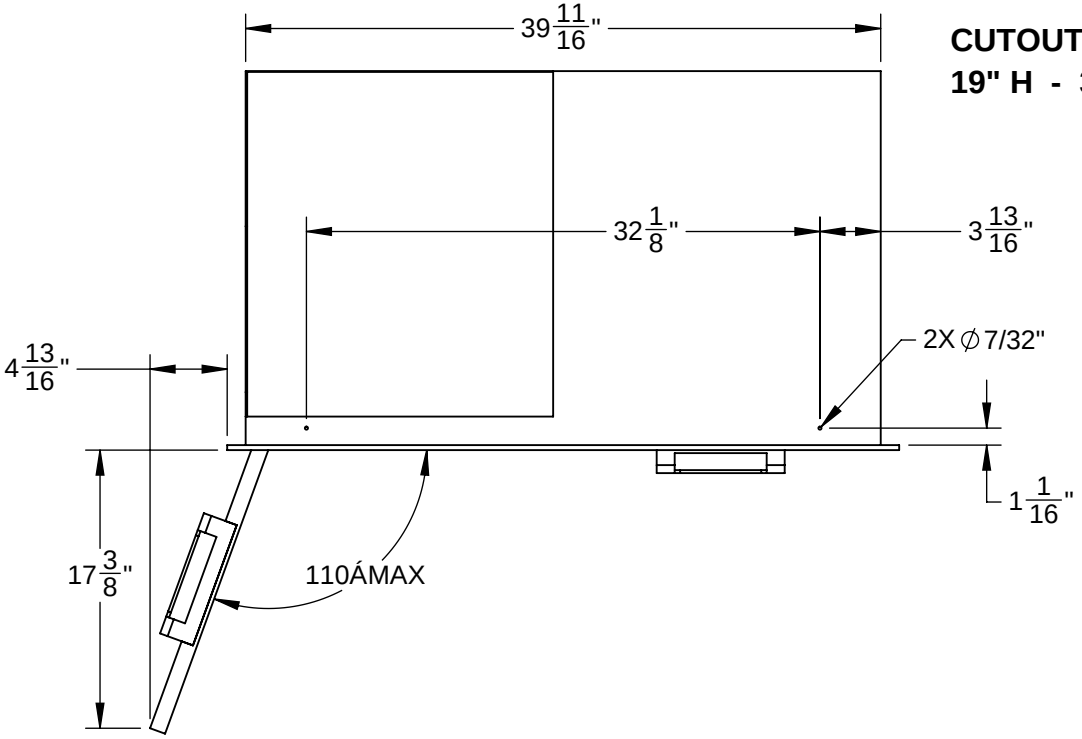

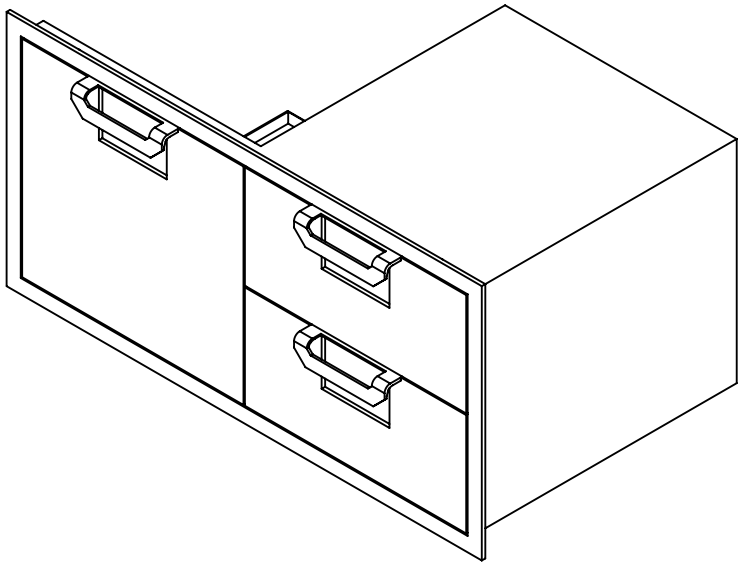

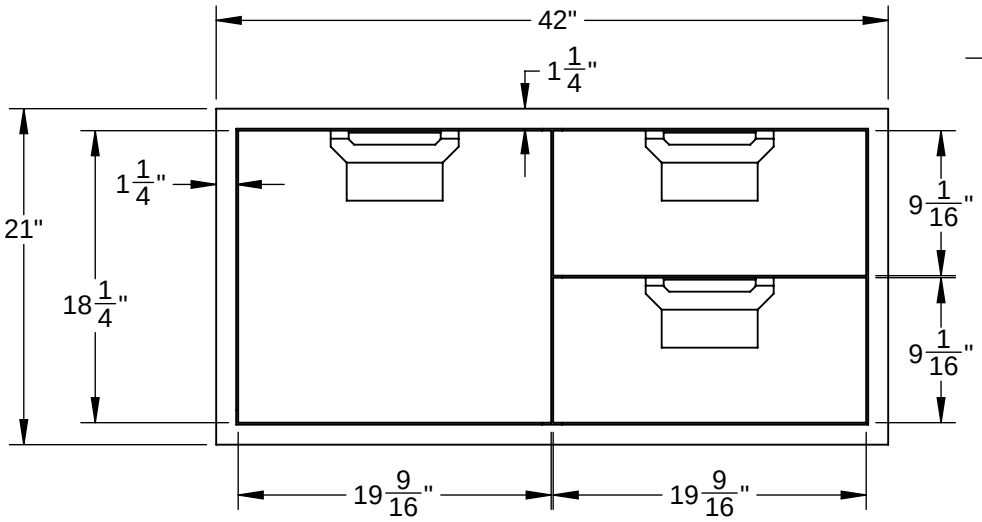

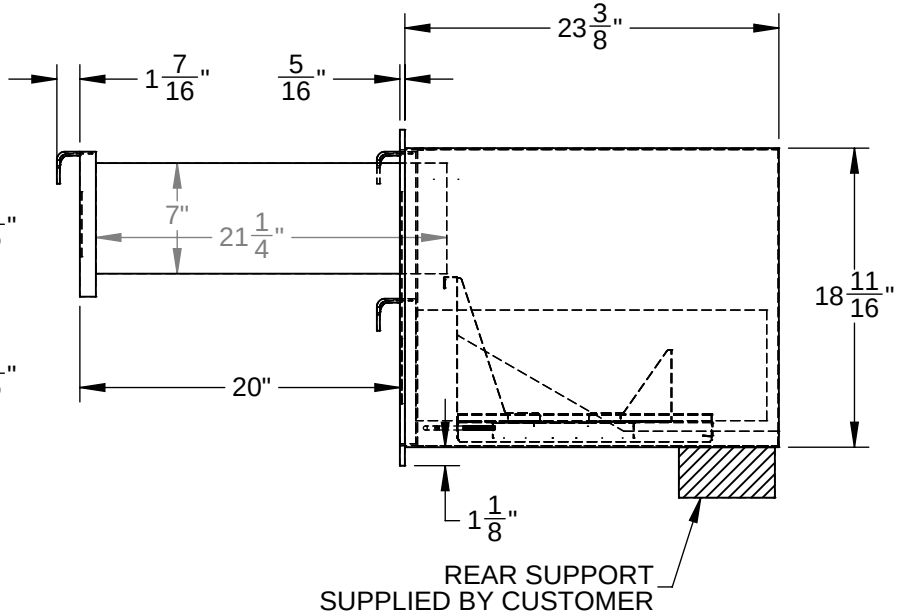

Revised: 09/12/2018