ASSEMBLY INSTRUCTIONS

PDKG214

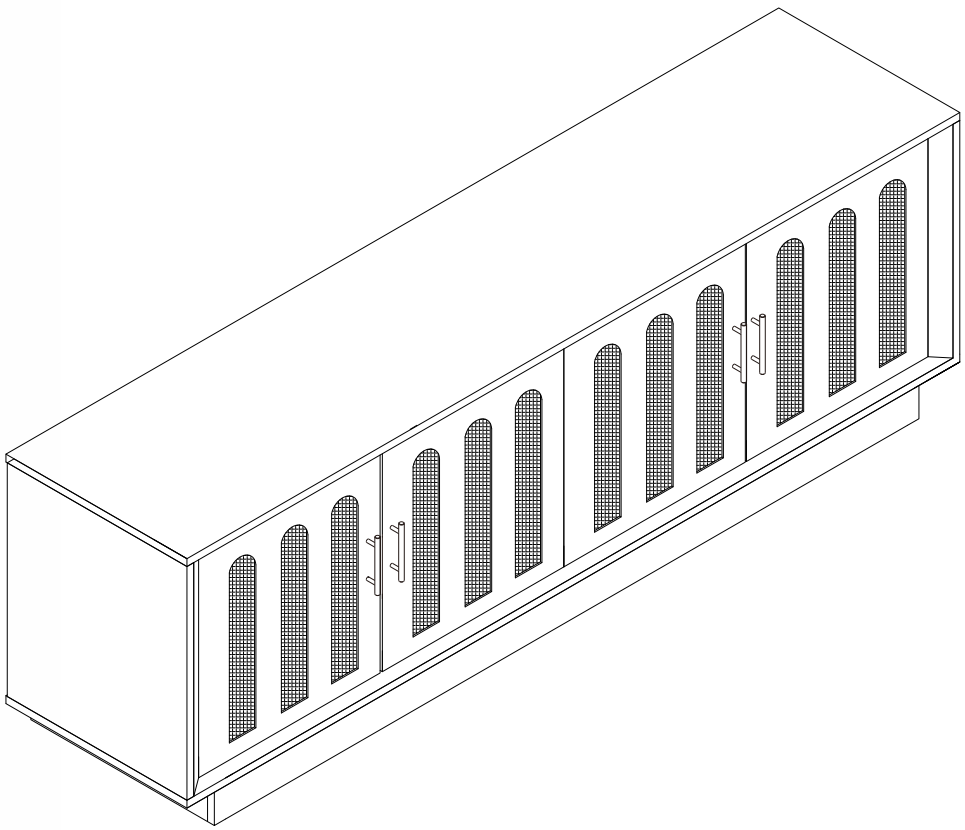

ATTENTION

Prior to assembly,please check and count all parts and hardware regarding to the list on page 4-5 of the instruction.If there is any part missing or damaged, please send us messages with the part name and number or send us pictures,we will send you the replacement asap.

If you have any questions about the product or assembly,please kindly contact us at anytime, we will solve your problem asap.

Service E-mail: cservice7@yeah.net

Be sure to provide your order ID so we can assist you better.

IMPORTANT INFORMATION

READ CAREFULLY.

KEEP THIS INFORMATION FOR FURTHER REFERENCE.

GENERAL GUIDELINES

If you have any questions about the product or assembly,please kindly contact us (cservice7@yeah.net) at any time, we will solve your problem asap.

NOTES BEFORE YOU START

1. If an odor is present when first opening the package, please leave the unwrapped product in a shaded and ventilated area for a few days to air out.
2. Open and assemble the item in the area you plan to keep it to avoid excessive heavy lifting.
3. Assemble the product in a spacious space,and on a soft、clean surface to avoid damage and scratches.
4. TWO PEOPLE are recommended for ease in the assembly of this product.
5. Ensure all parts and hardware are avaiable before assembly, If you find any part is damaged or missing, please email us(cservice7@yeah.net),we will send you the replacement asap.
6. Follow each step in the manual to ensure the proper assembly.
7. You will use the following tools:a Phillips head screwdriver and rubber hammer. The wood dowels may need to be gently tapped in lightly with a rubber hammer.

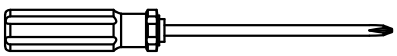

(not included)



(not included)

8. We don't recommend using the electric screwdriver.if you use the power screwdriver to tighten the screws,please be slow down,and stop if the screw is already tightened,excessive screwing may damage the screw and product surface.

WARNINGS

1. Please be careful and slowly when opening and assembling the product,especially keep the parts and packaging away from children to avoid accidental injury.
2. Please avoid using aggressive chemicals/cleaners to avoid damaging the product surface.
3. Don't push or pull the product to avoid damaging your floor.
4. Don't throw away any packing materials and accessories until assembly is complete.

Exploded Drawing

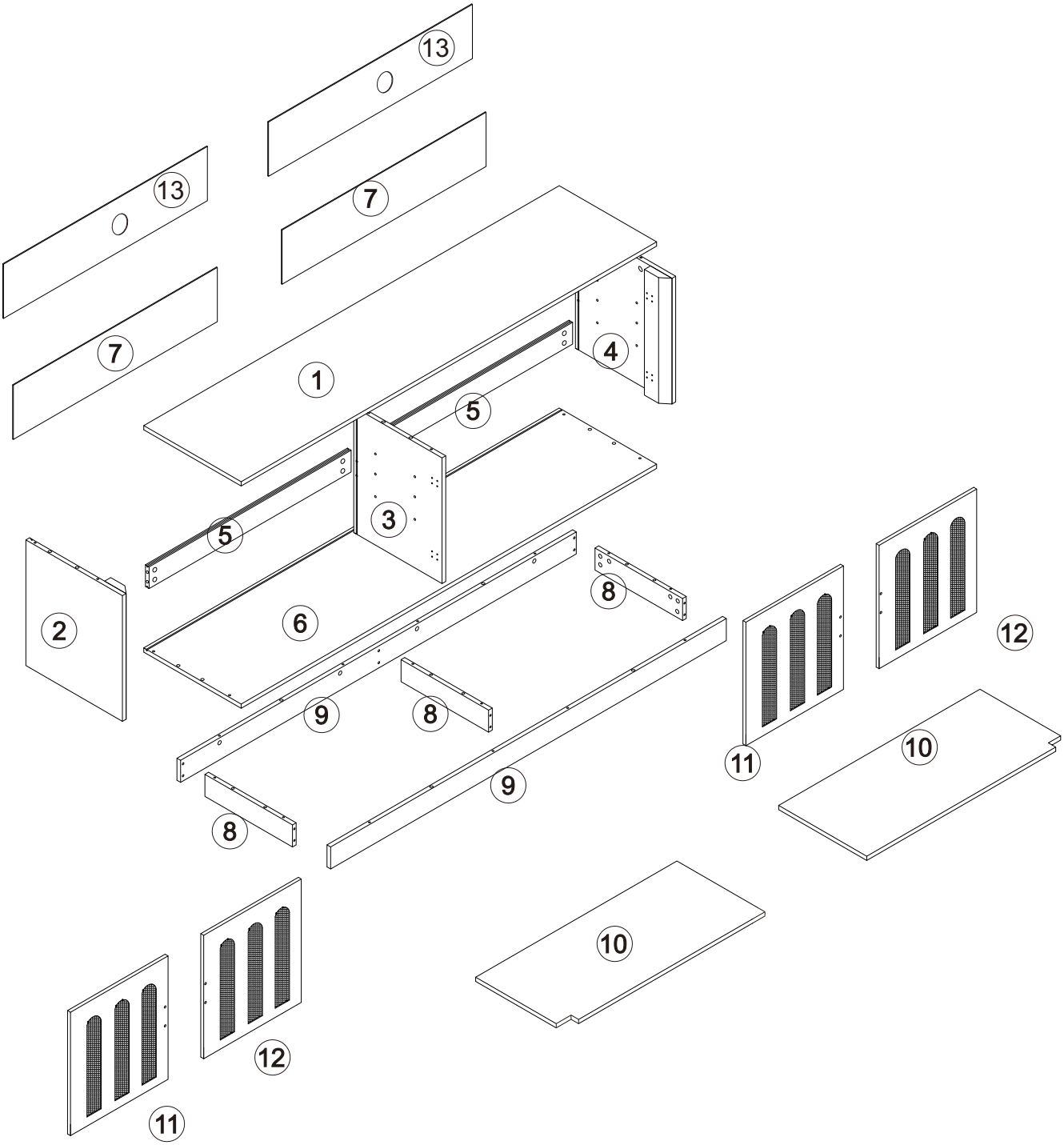

Hardware list

A 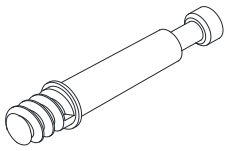 ϕ6X35mm 40PCS spare:4	B  Ø15X10mm 40PCS spare:4	C 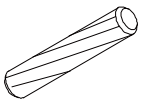 ϕ6X30mm 22PCS spare:3	D 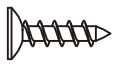 Ø 3x12mm 8PCS spare:1
E 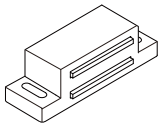 2PCS	F  M4x35mm 6PCS spare:1	G  ϕ3X14mm 4 PCS spare:1	H  M4X22mm 8PCS spare:1
J  8PCS spare:1	K 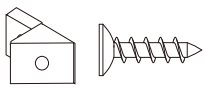 Ø3x16mm 20PCS spare:2	M 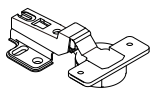 4 PCS	N 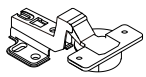 4 PCS
O 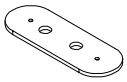 4 PCS	P  ϕ3.5X12MM 48PCS spare:4	Q 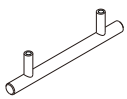 4 PCS	

NOTE:Pleased distinguish the M or N hinges

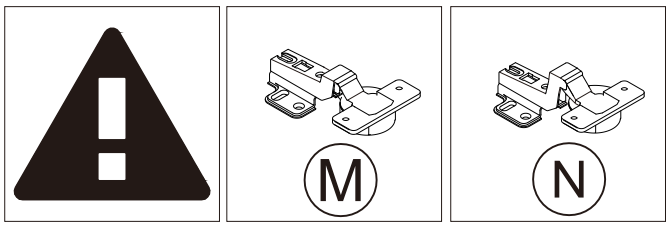

CAM LOCK/BOLT FASTENING INTRODUCTION

(You will use it during assembly)

1 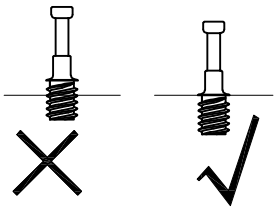	**2** 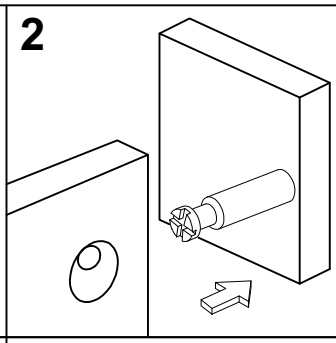	**3** 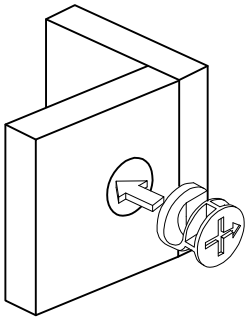	**4** 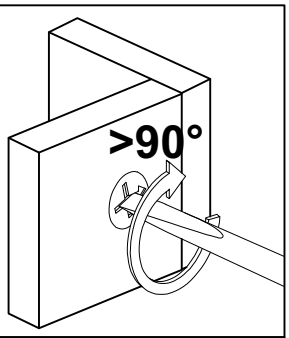
1.Screw cam bolt into the threaded anchor gently. (Attention:don't screw cam bolt too deep or too shallow.)	2.Please connect the two boards you want connect by inserting cam bolt.	3.Insert the cam lock into the round hole of the board. (Attention:point the arrow on the top of the cam lock to the outer edge.)	4.Turn the cam lock clockwise until it is firmly tightened.

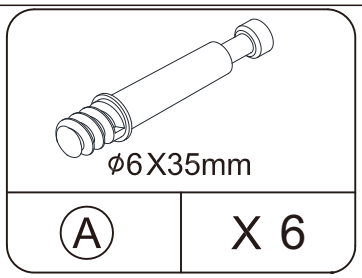

1.

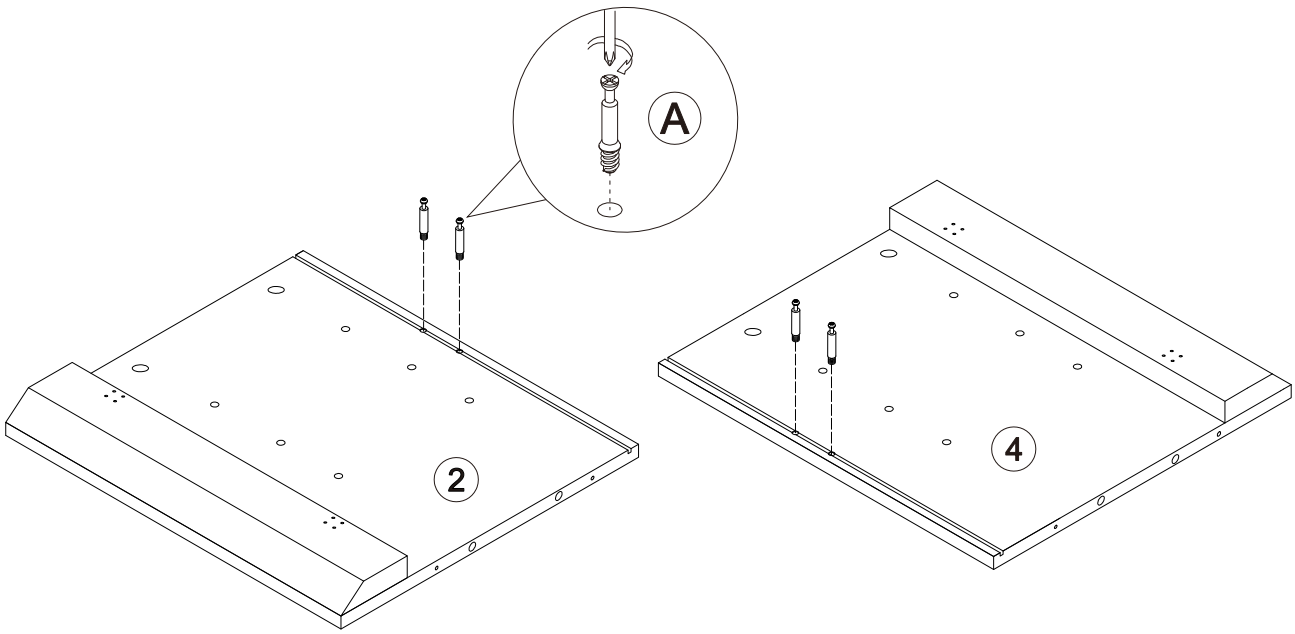

Note that this side have no cam lock holes

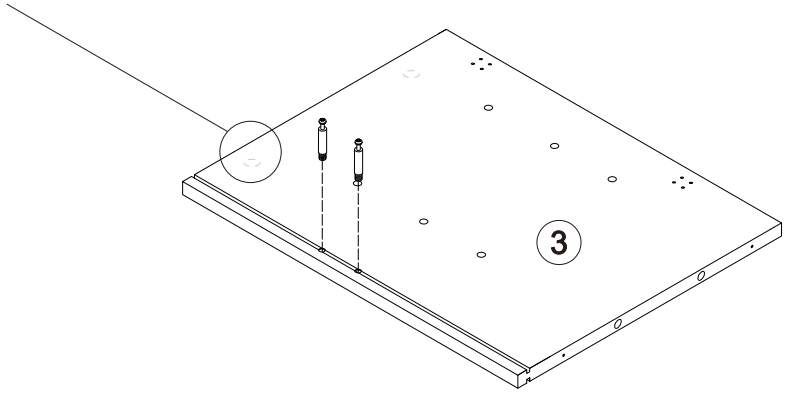

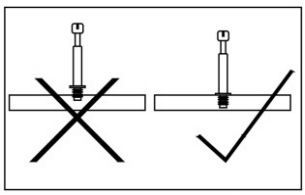

2.

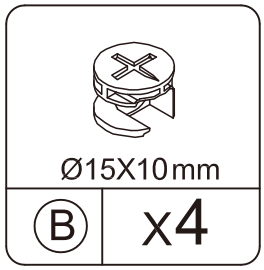

People needed for assembly:2

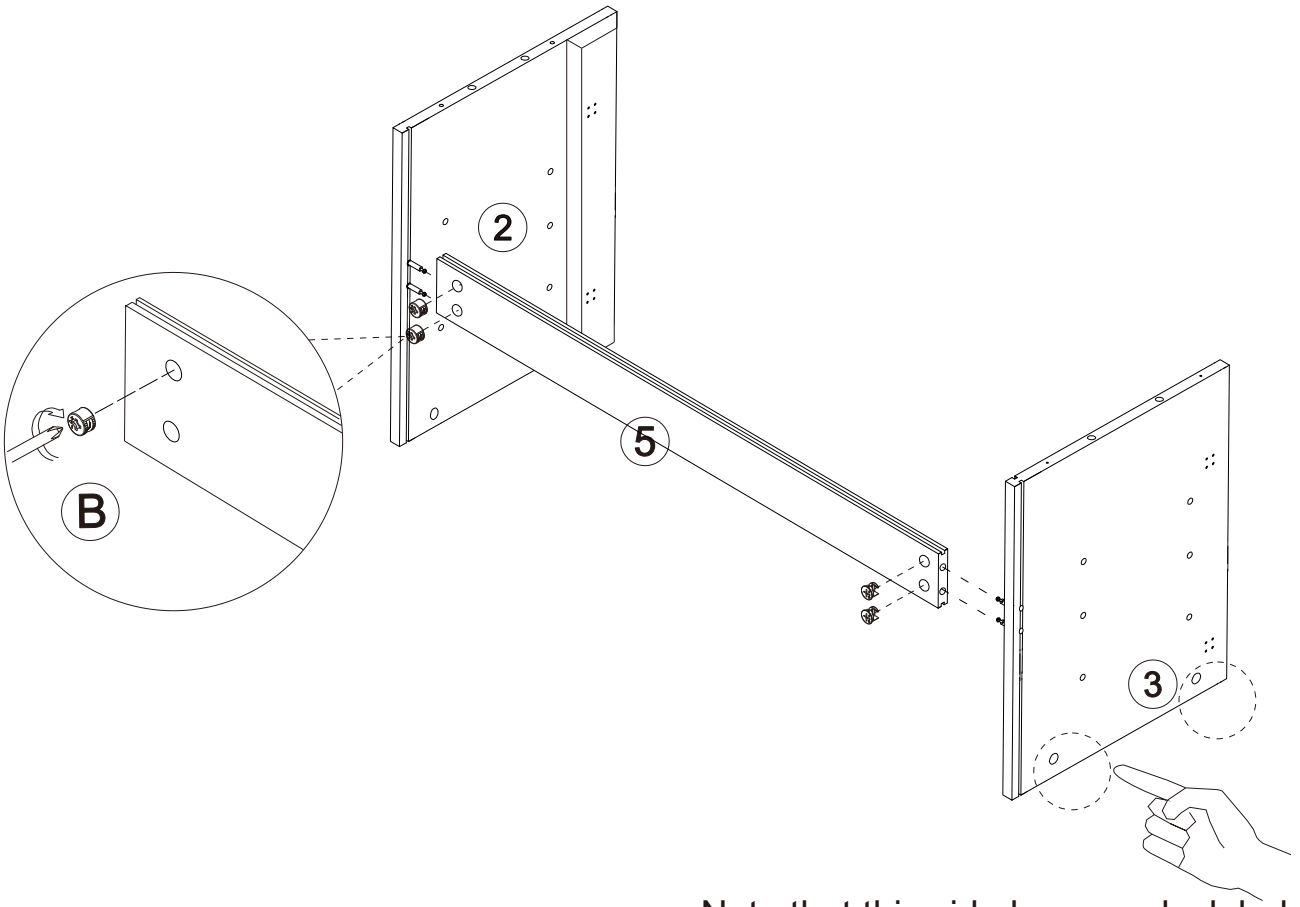

Note that this side has cam lock holes

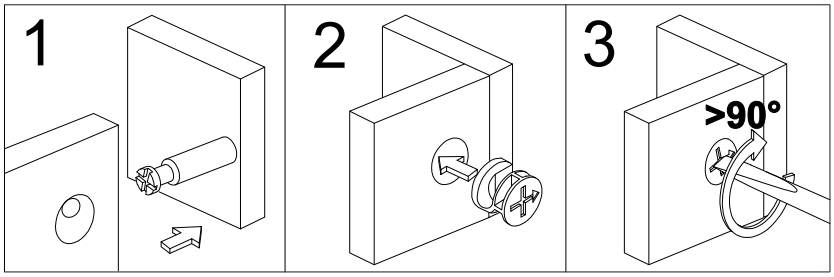

3.

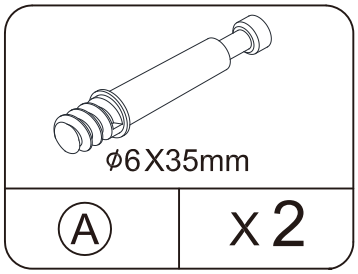

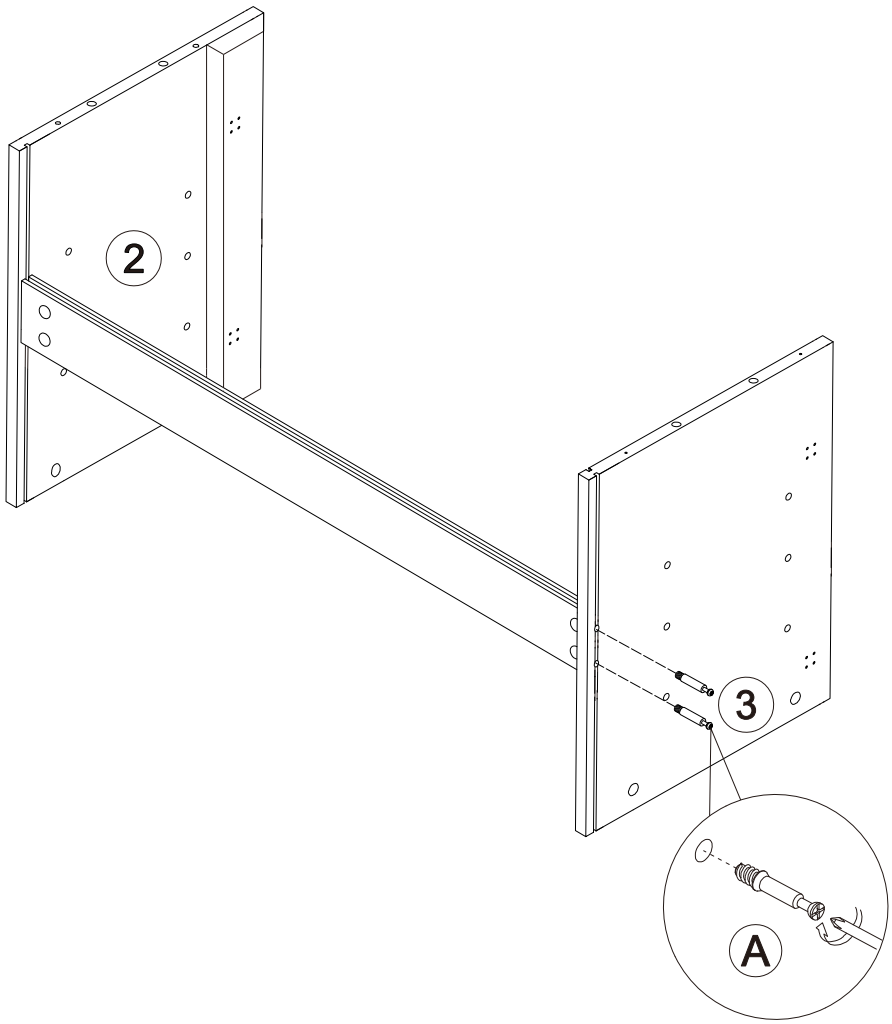

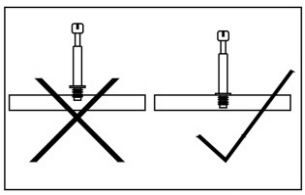

4.

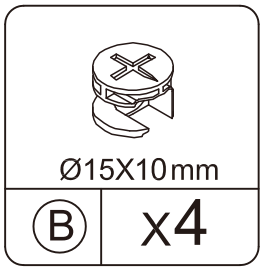

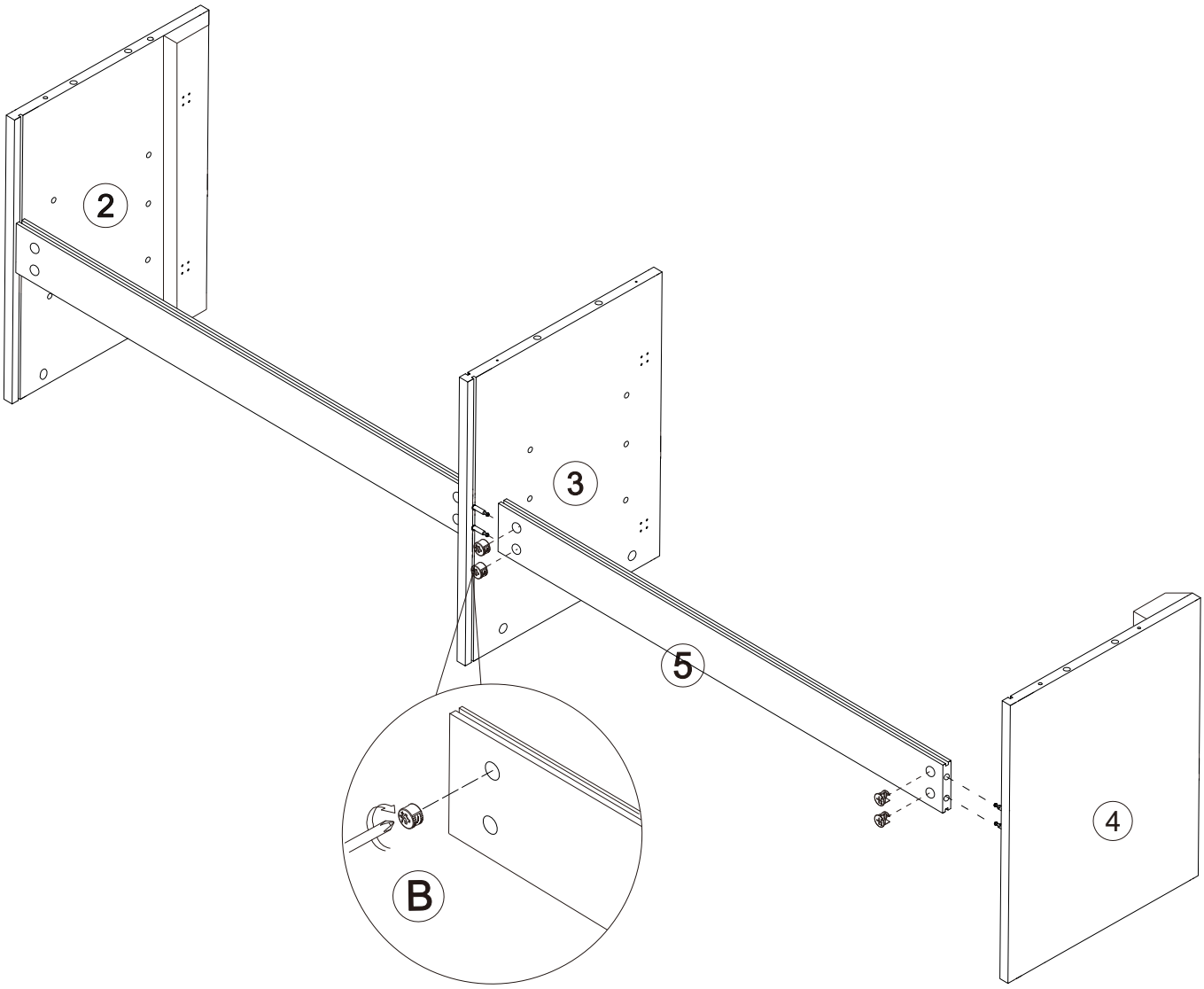

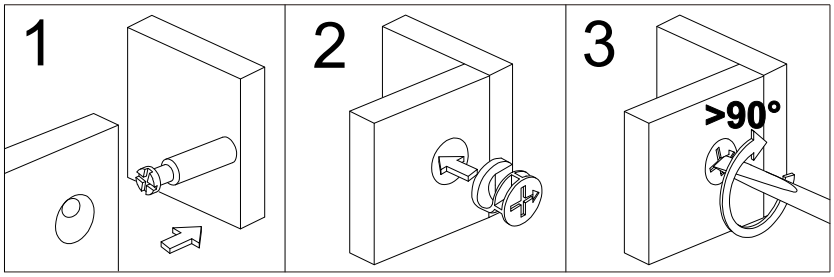

5.

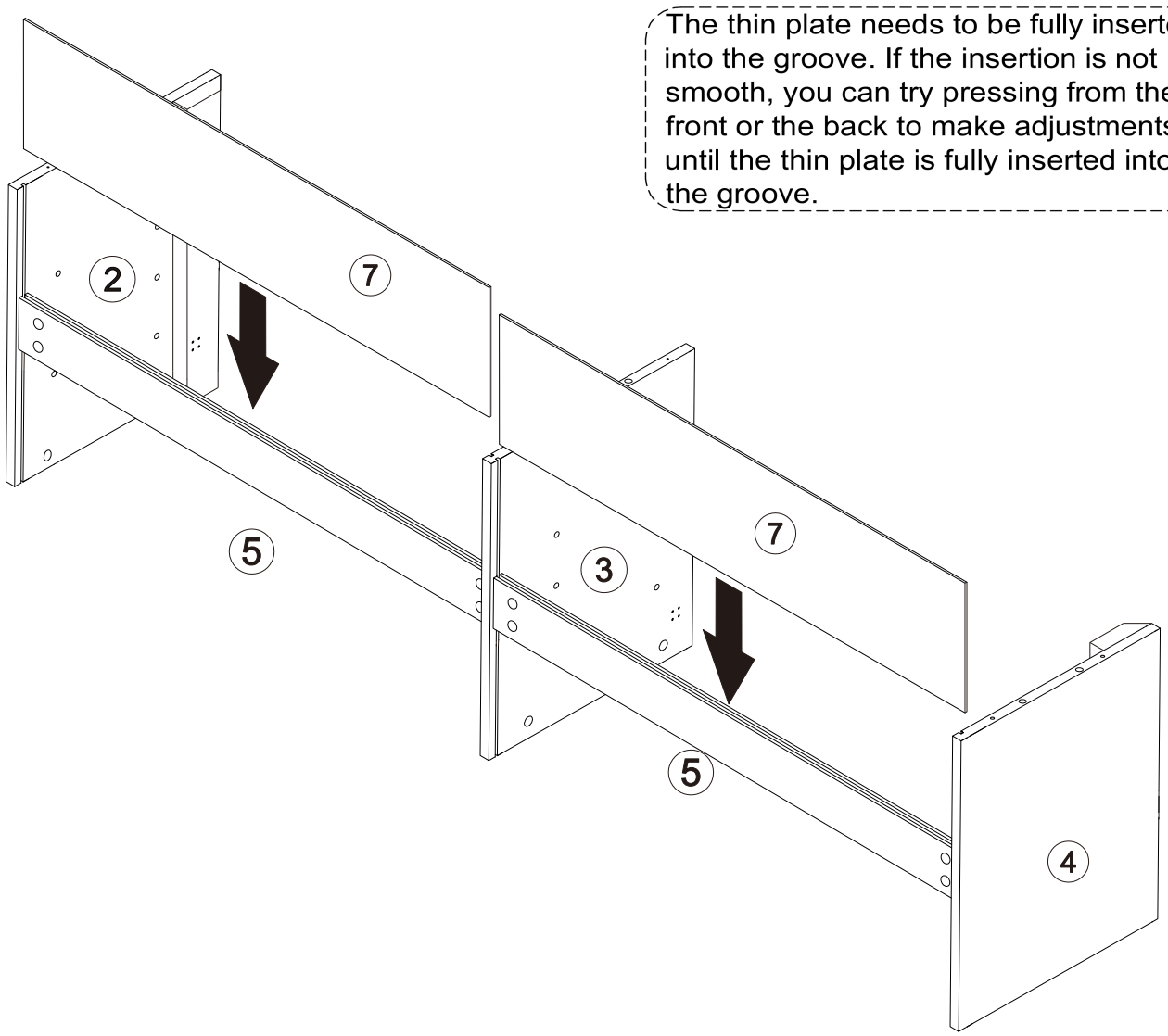
The thin plate needs to be fully inserted into the groove. If the insertion is not smooth, you can try pressing from the front or the back to make adjustments until the thin plate is fully inserted into the groove.
2
7
5
3
7
5
4

6.

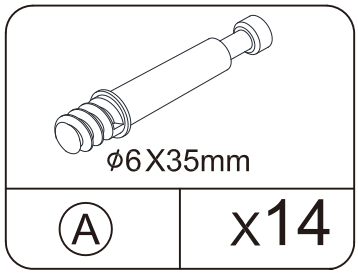

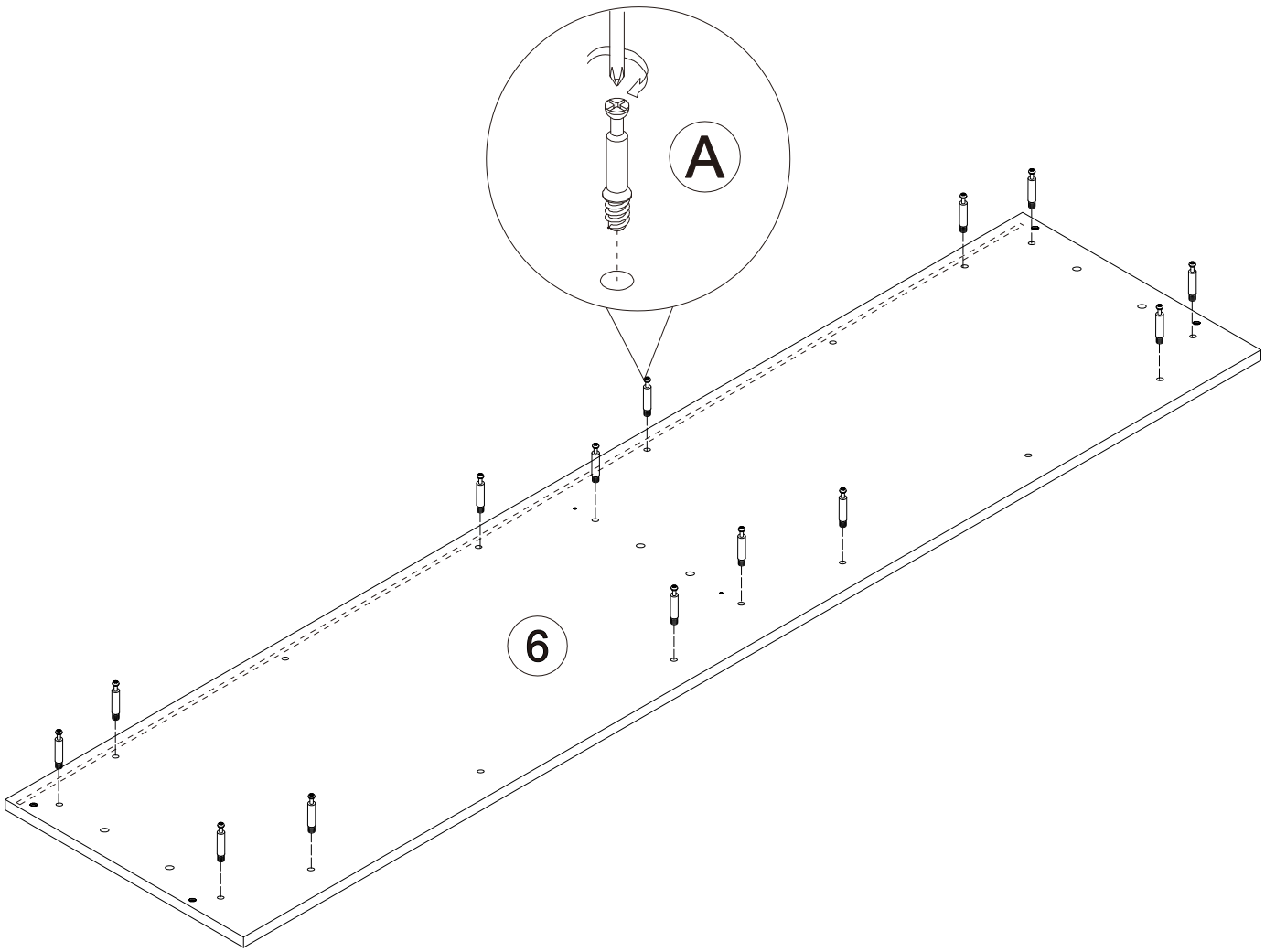

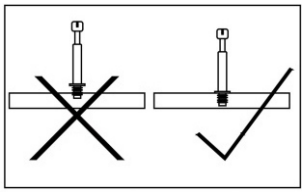

7.

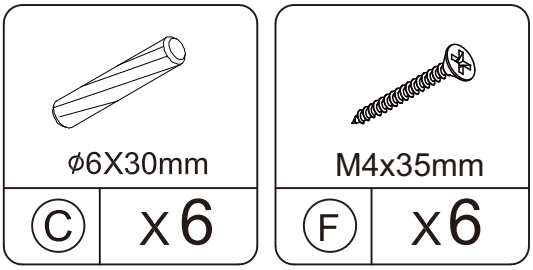

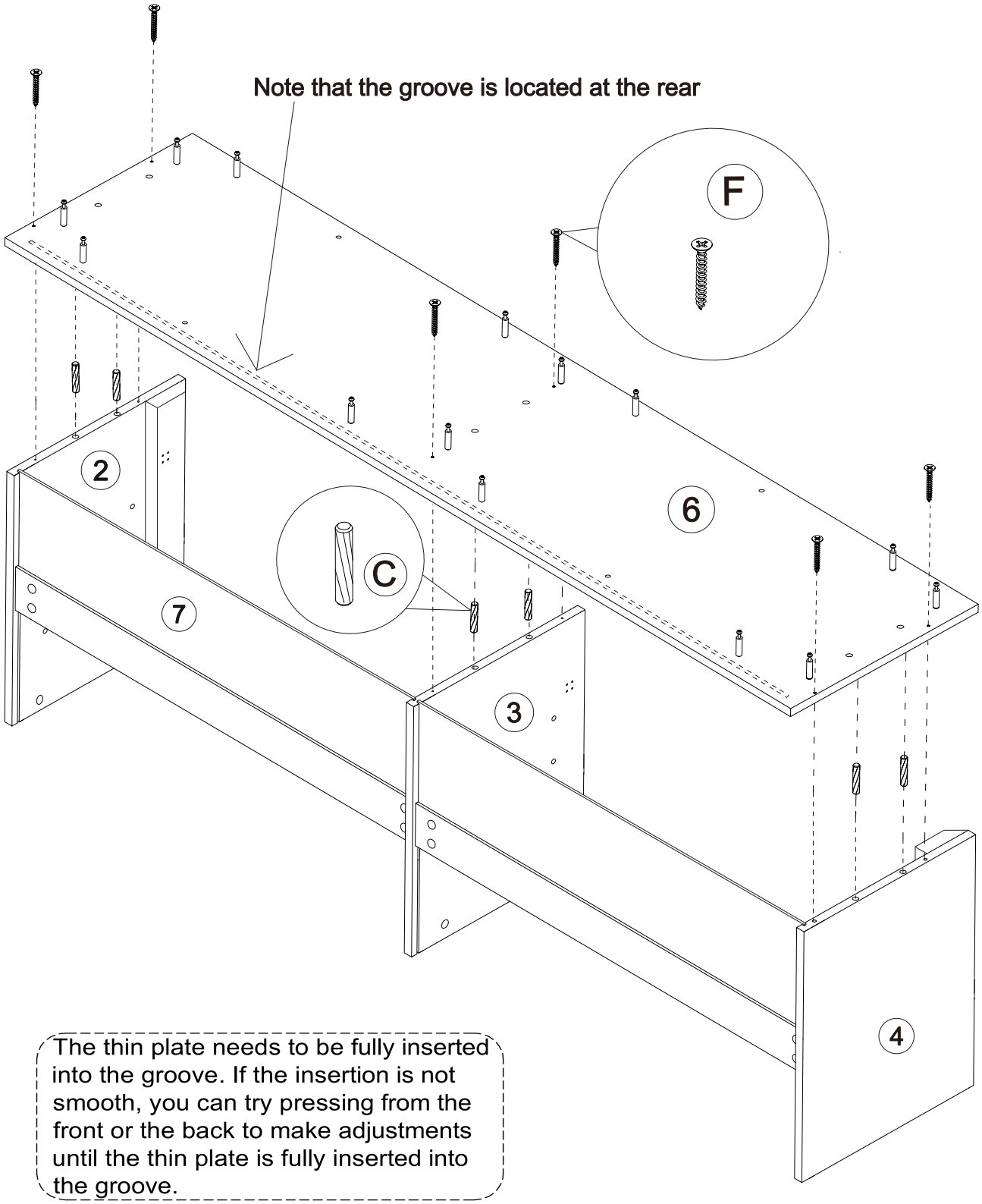

The thin plate needs to be fully inserted into the groove. If the insertion is not smooth, you can try pressing from the front or the back to make adjustments until the thin plate is fully inserted into the groove.

8.

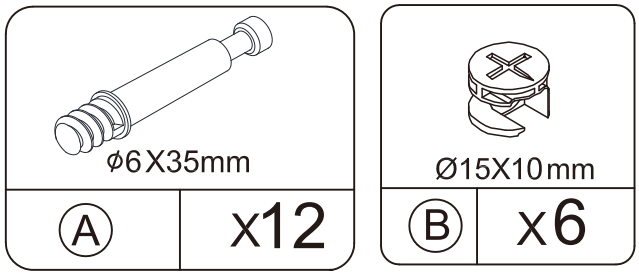

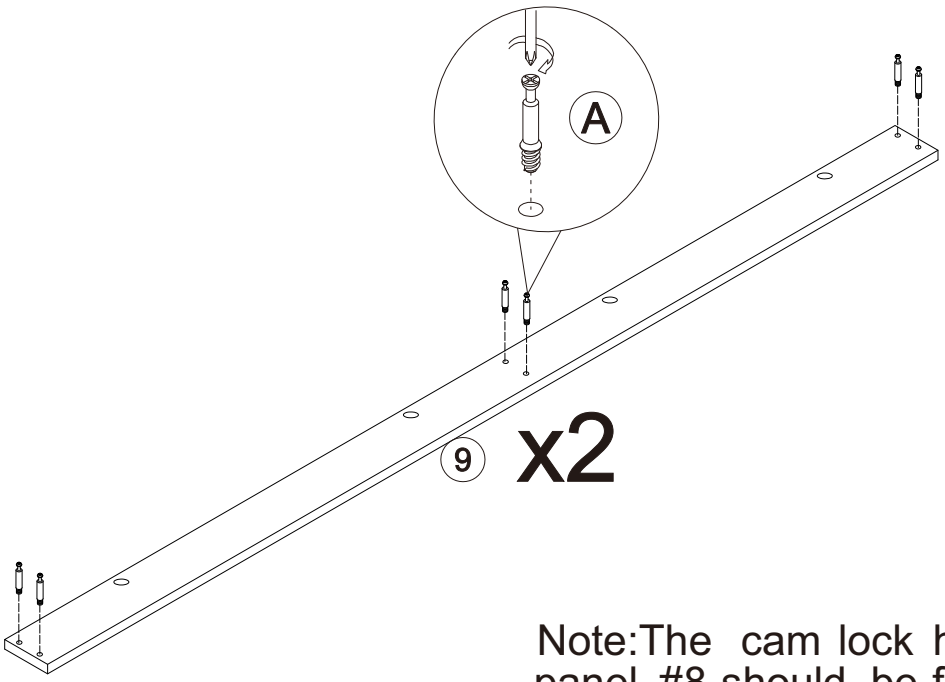

Note:The cam lock holes on panel #8 should be face inward.

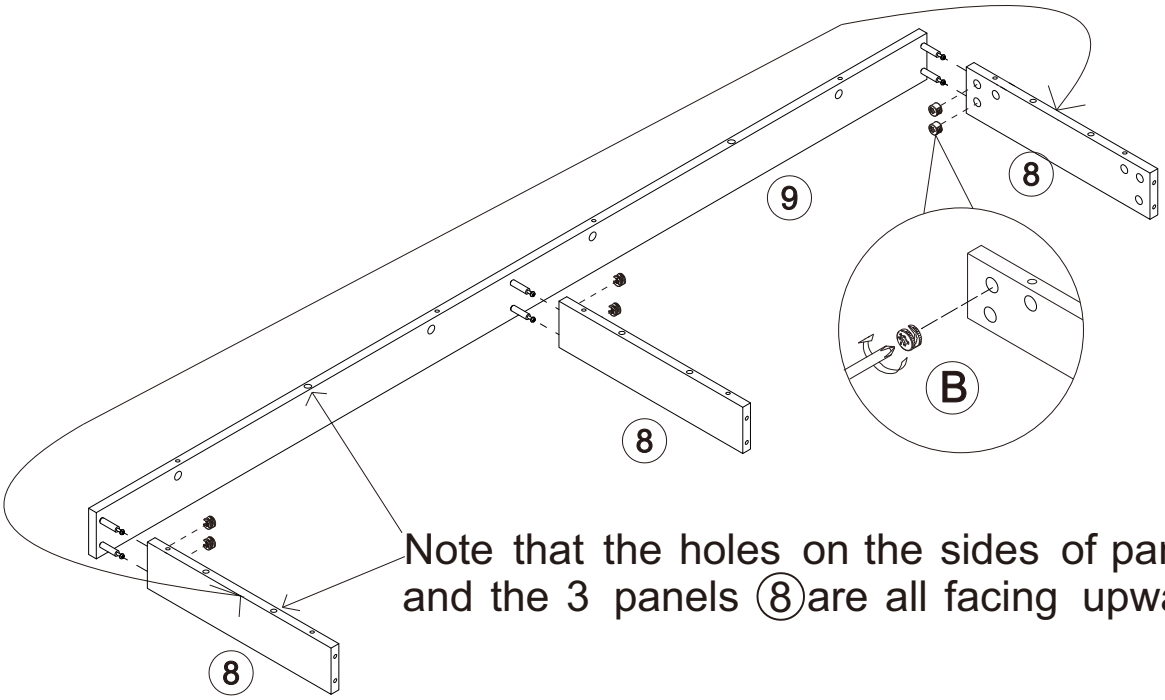

Note that the holes on the sides of panel ⑨ and the 3 panels ⑧are all facing upwards.

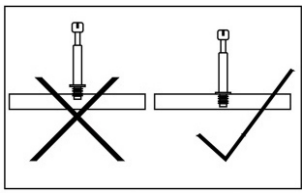

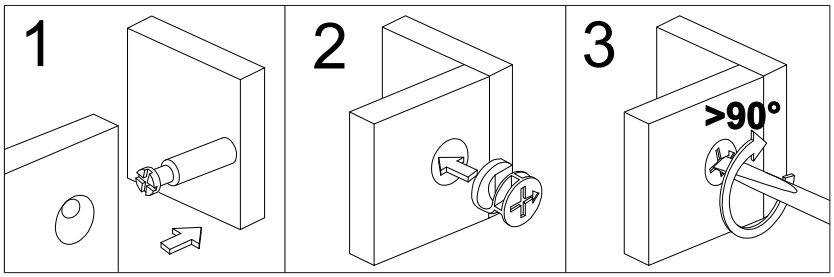

9.

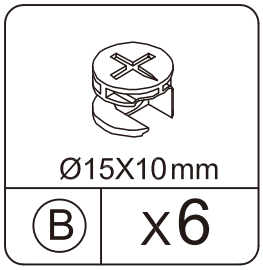

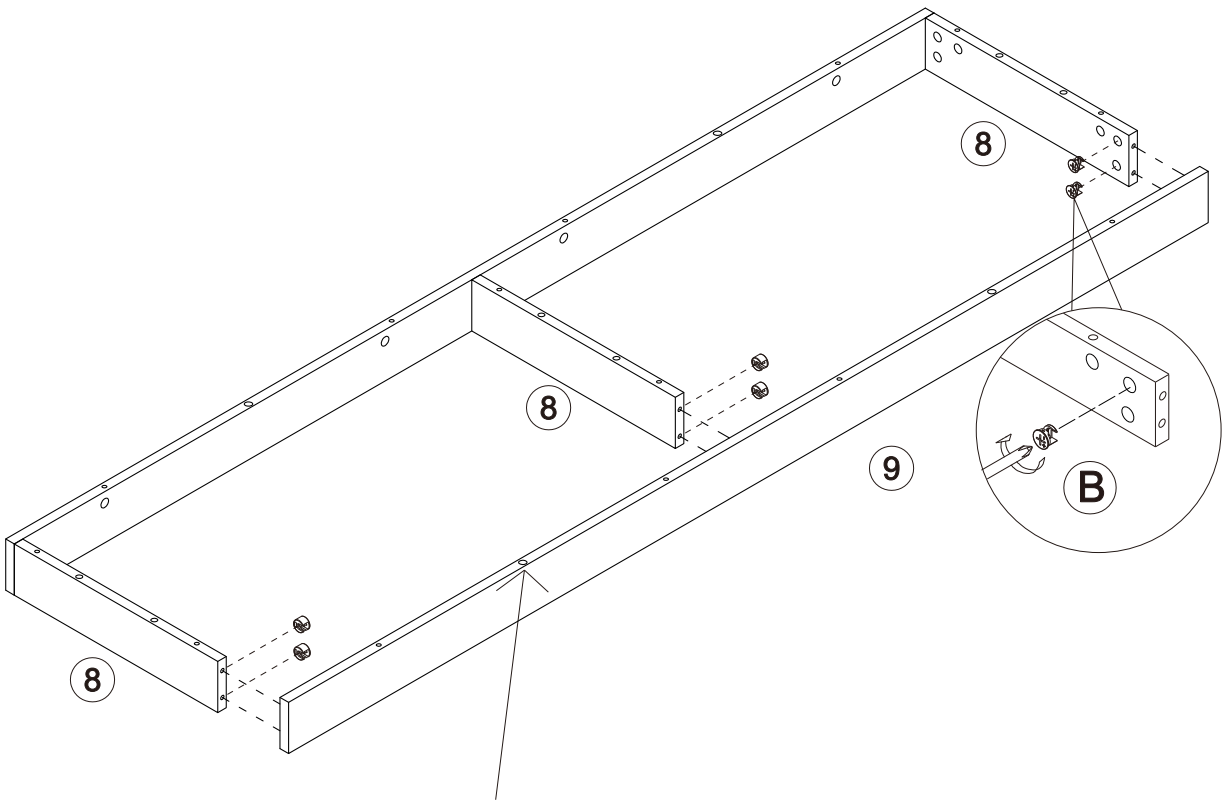

Note that the hole on the side of #9 panel faces upwards.

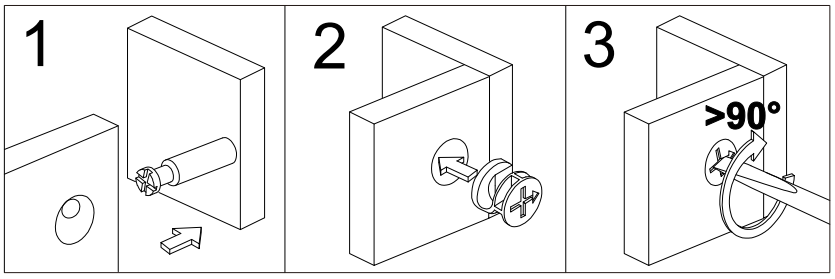

10.

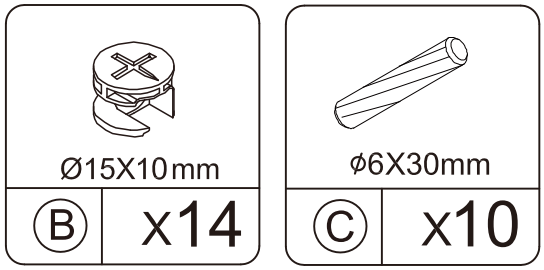

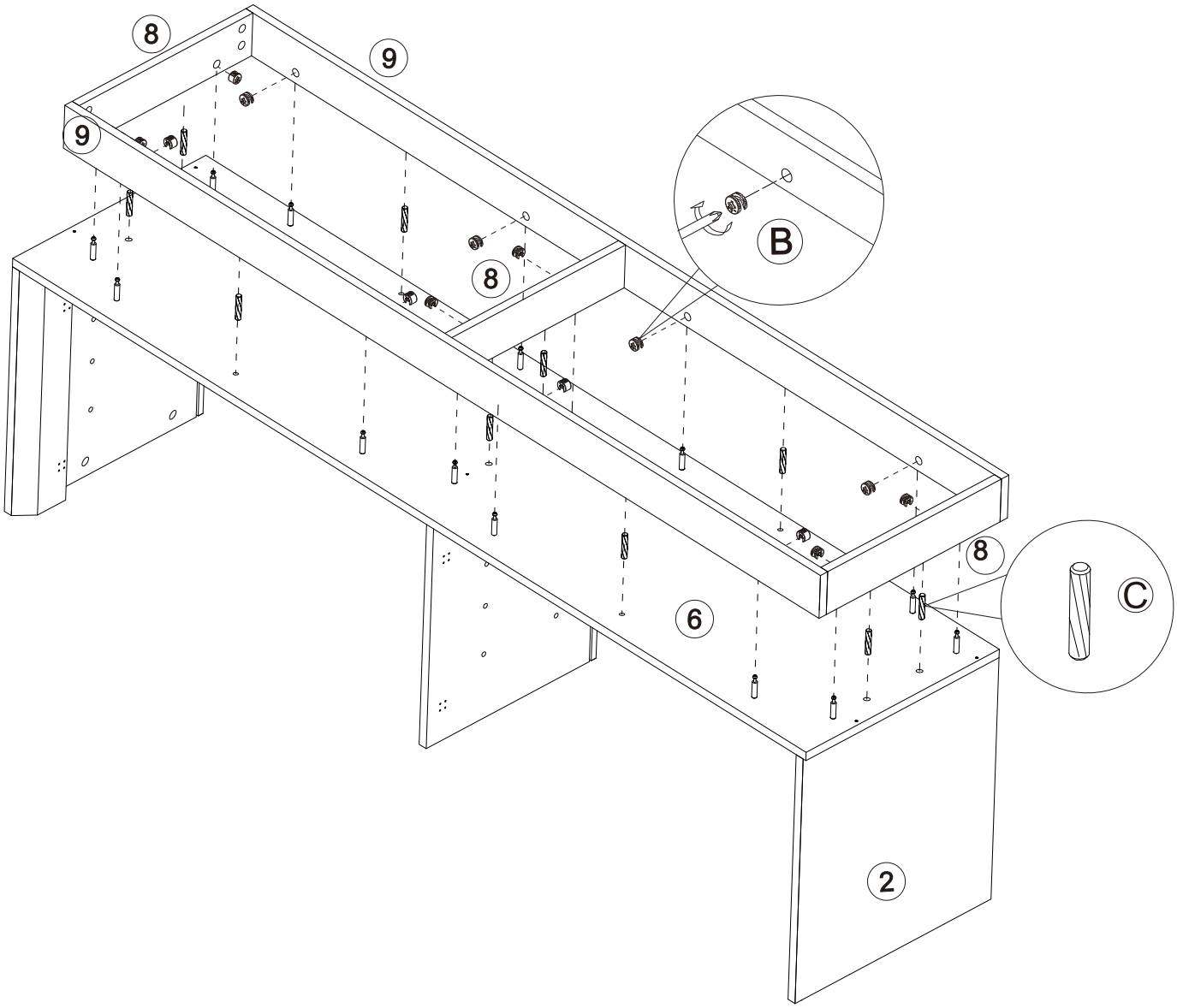

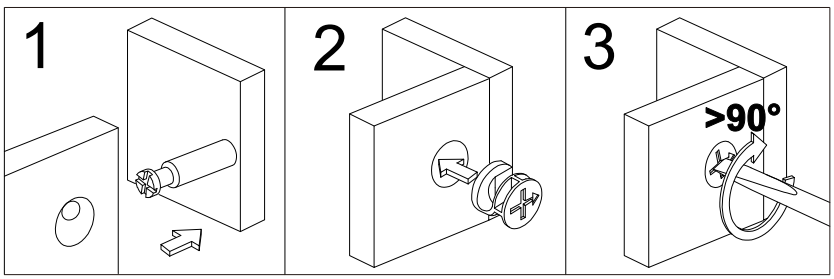

11.

The thin plate needs to be fully inserted into the groove. If the insertion is not smooth, you can try pressing from the front or the back to make adjustments until the thin plate is fully inserted into the groove.

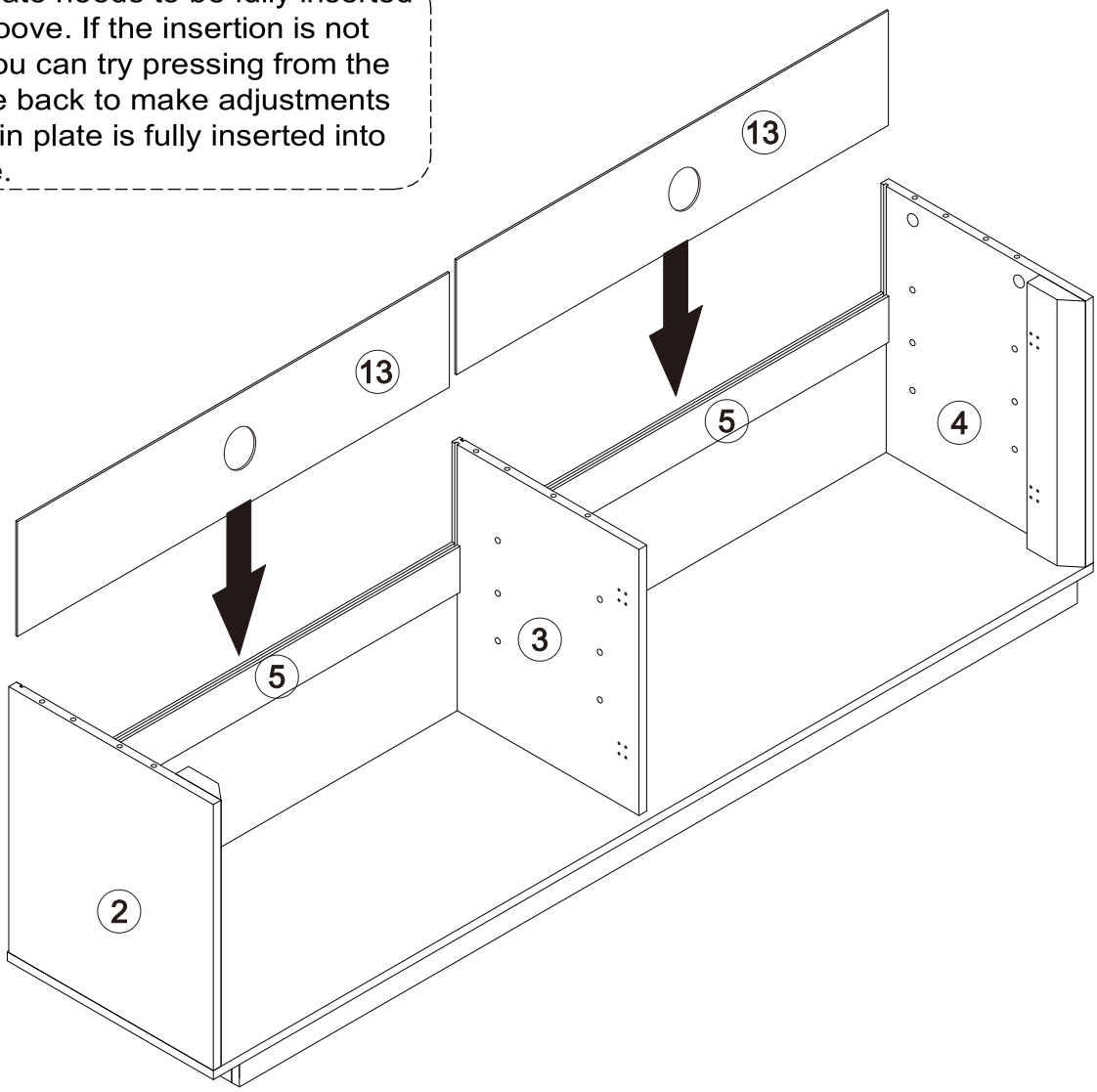

12.

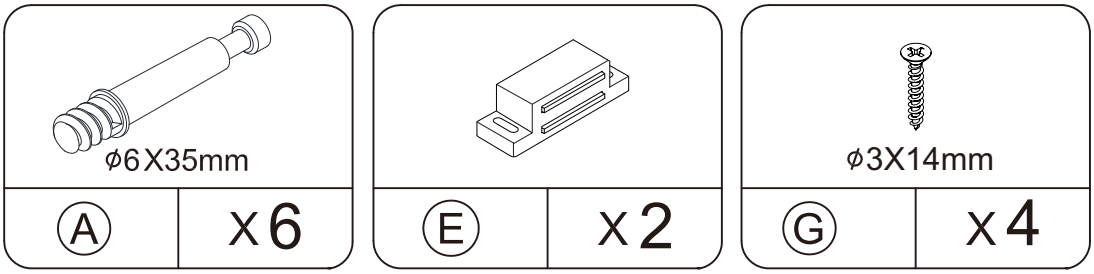

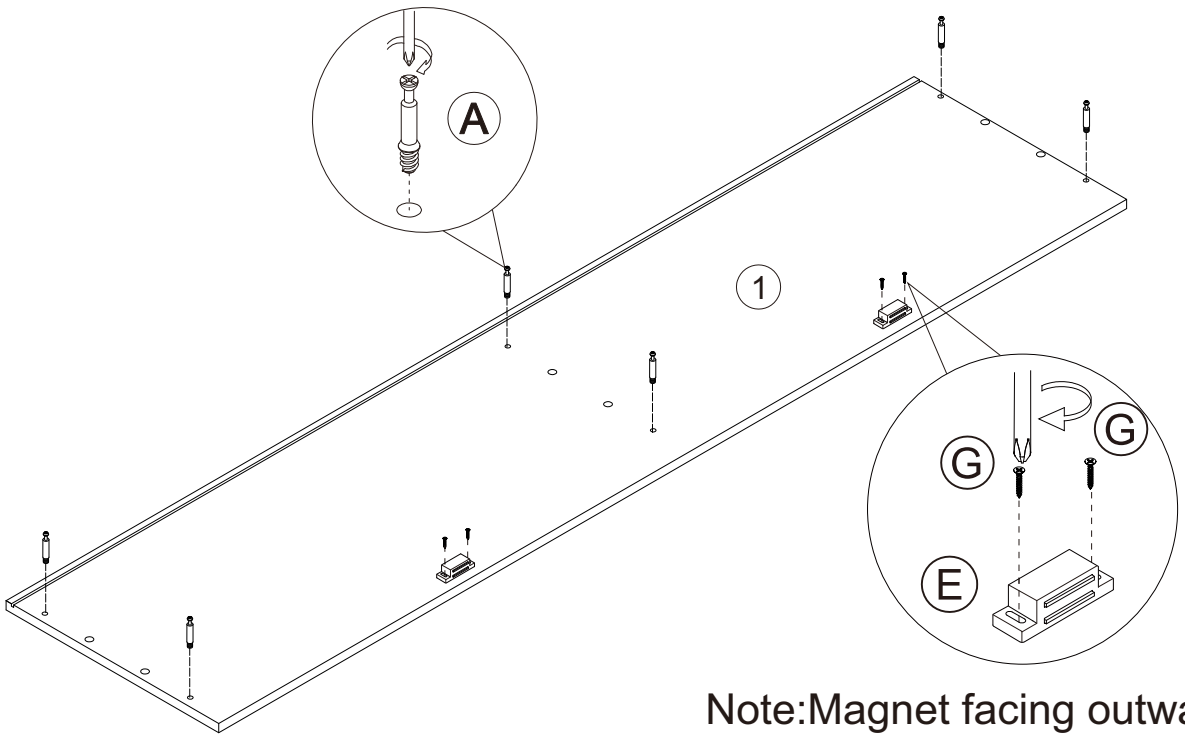

Note:Magnet facing outward.

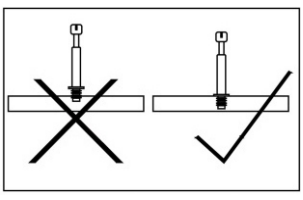

13.

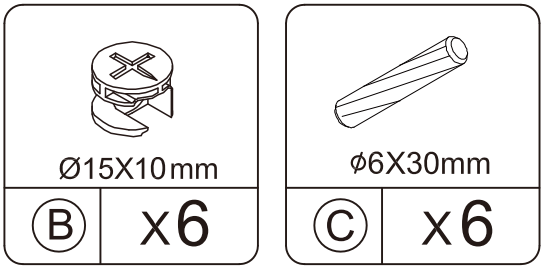

Note that the groove is located at the rear.

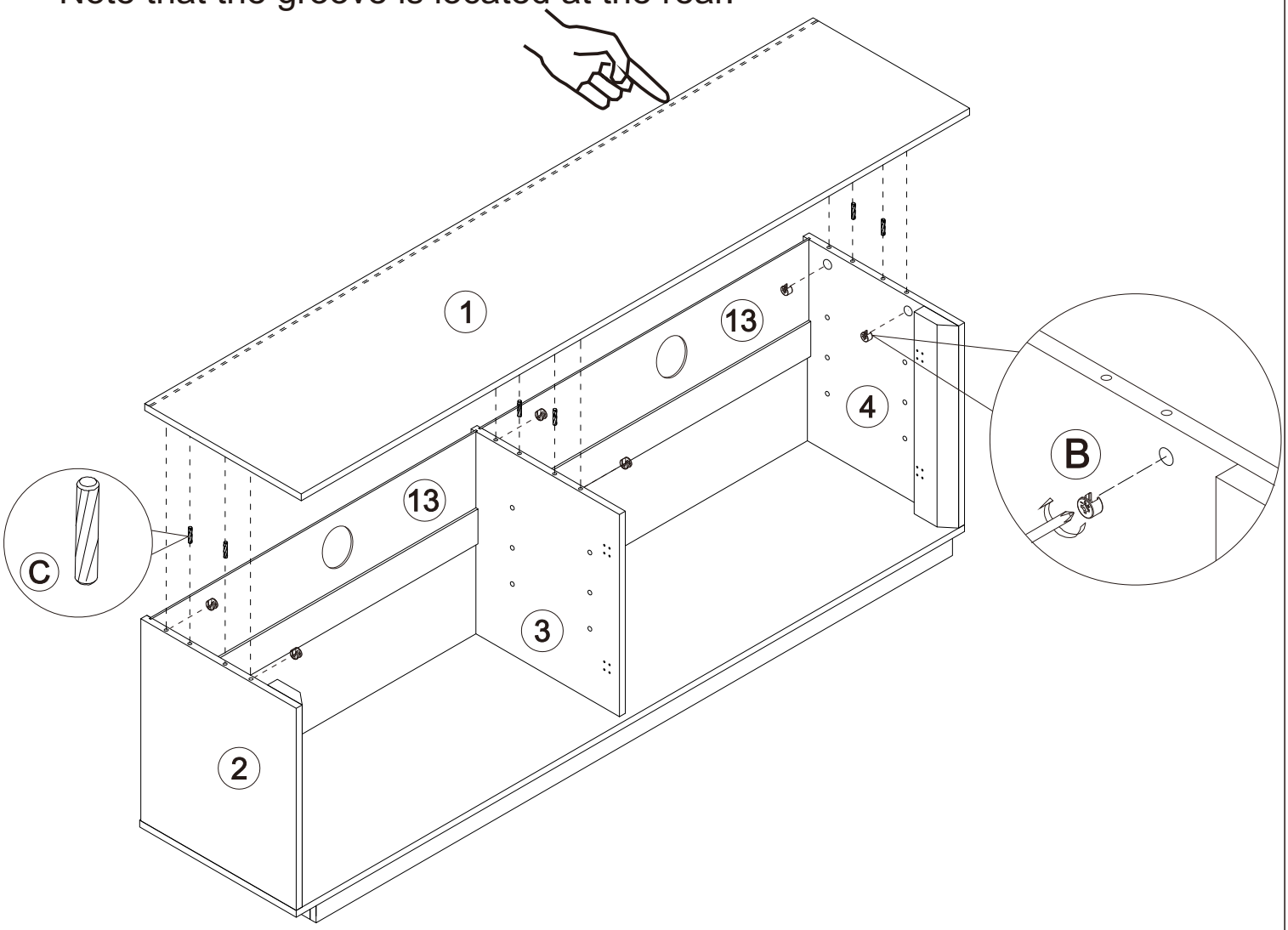

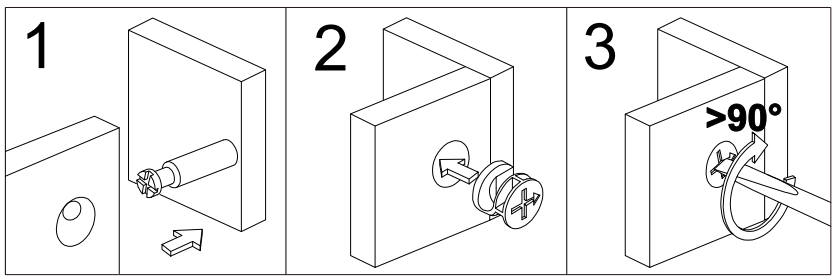

14.

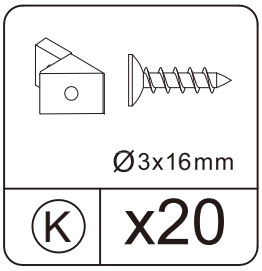

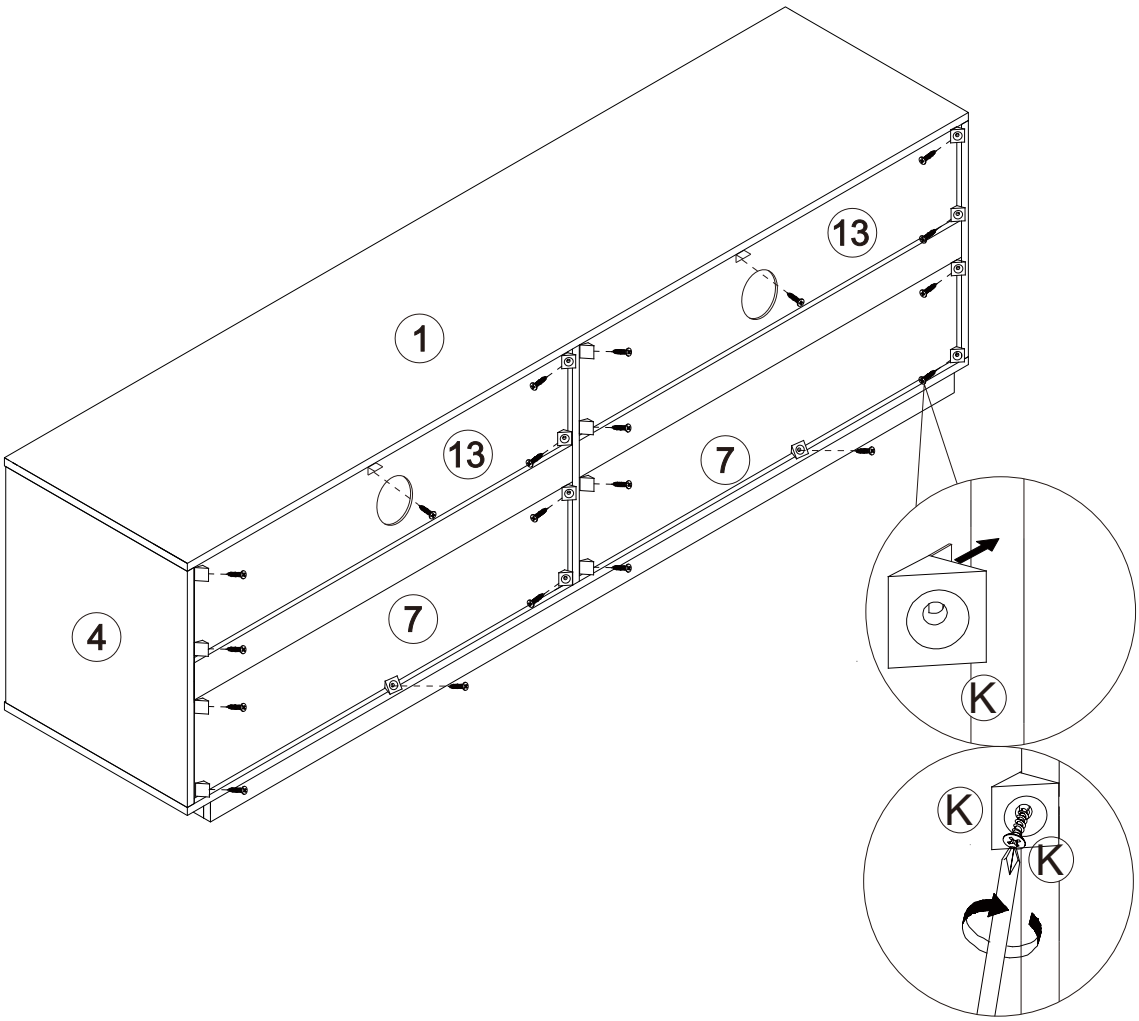

15.

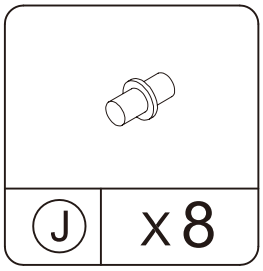

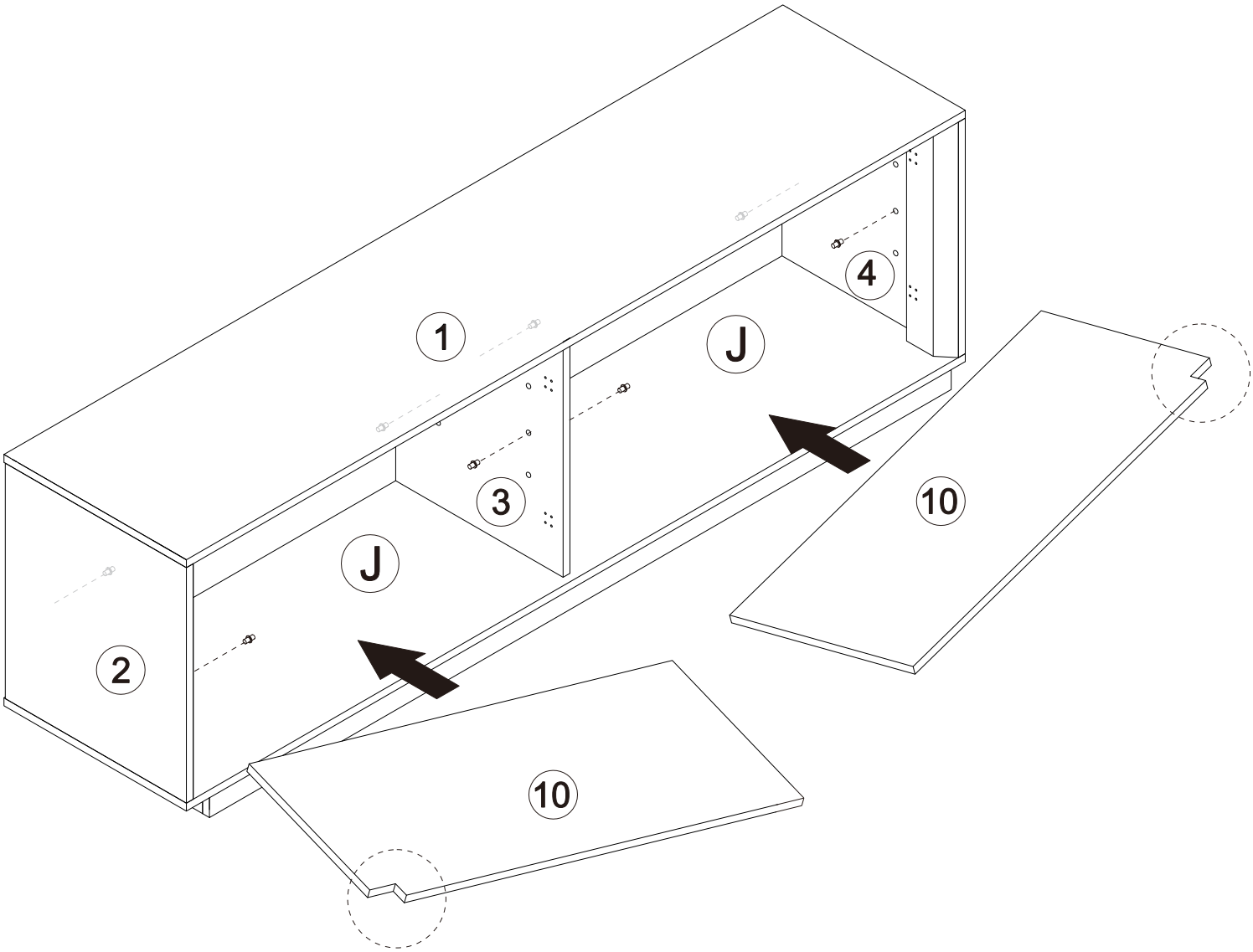

Important: Install part #10 with the cut corner in the correct position.

16.

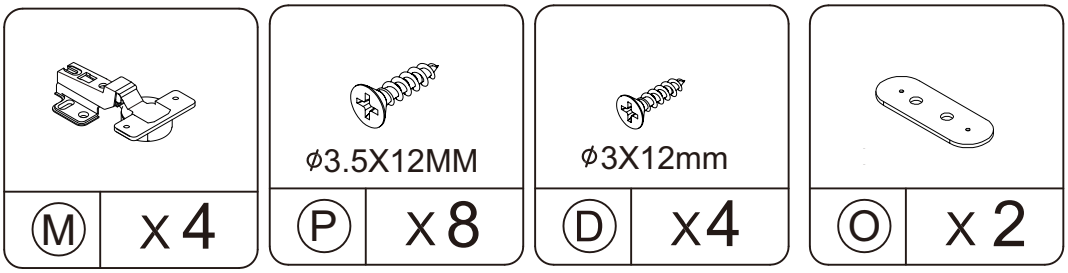

First,install the #M hinge on
one of the #11 panel and one of the #12 panel

NOTE:Pleased distinguish the M or N hinges

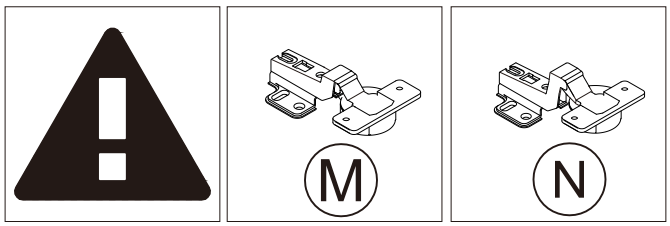

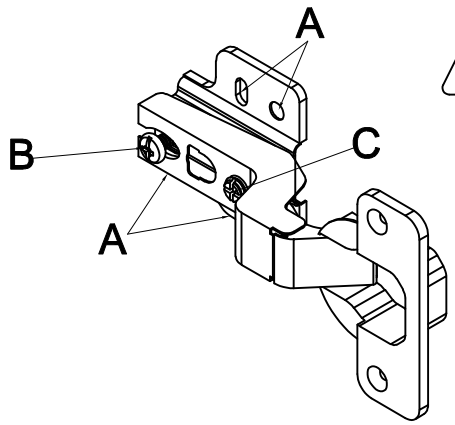

YOU WILL USE HINGE ADJUSTMENT INSTRUCTION ON THIS PAGE FOR THE NEXT STEP.

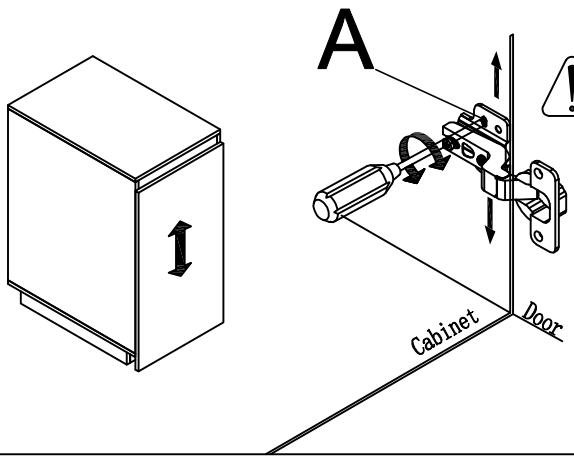

If you find a large gap above or bellow the door.

To adjust the vertical height.
Loosen the four screws "A" on both hinges.
Two of them are usually in slotted holes which allows you to adjust up or down by a few mm.
Then tighten back up.

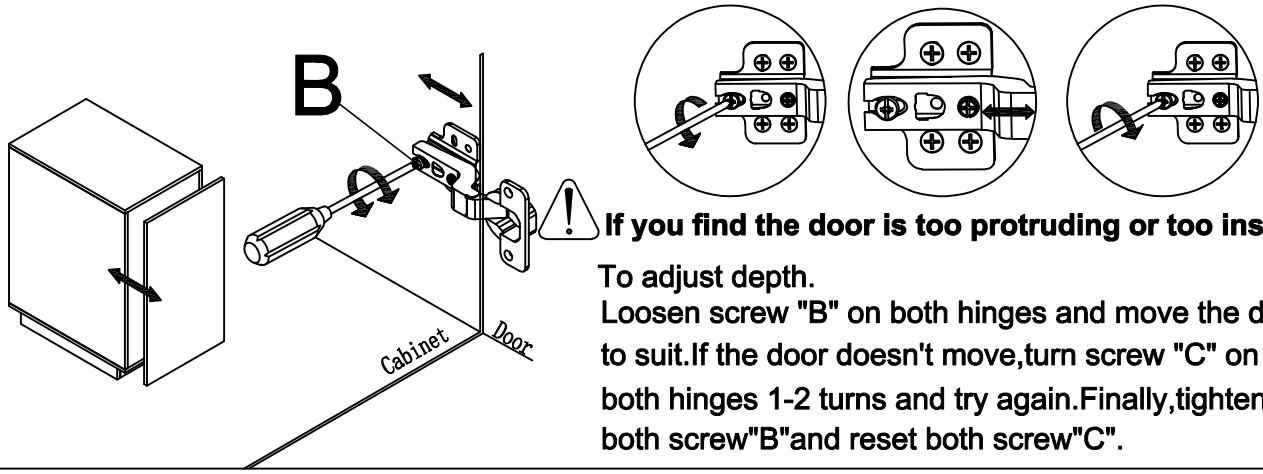

If you find the door is too protruding or too inside.

To adjust depth.
Loosen screw "B" on both hinges and move the door to suit.If the door doesn't move,turn screw "C" on both hinges 1-2 turns and try again.Finally,tighten both screw"B"and reset both screw"C".

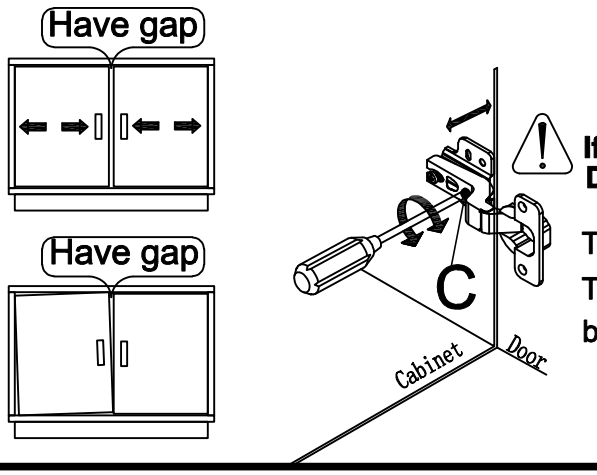

If you find a large gap between or beside the doors. Don't worry,It's not the problem with product.

To adjust side ways.
Turn screw"C"clockwise or counterclockwise on both hinges until the door is in the desired position.

17.

⌀3.5X12MM		M4X22mm
P	x8	H x2
Q	x1	

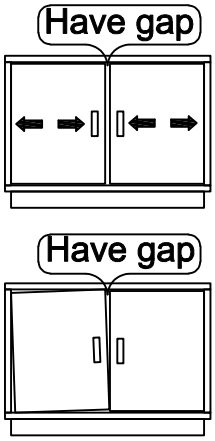

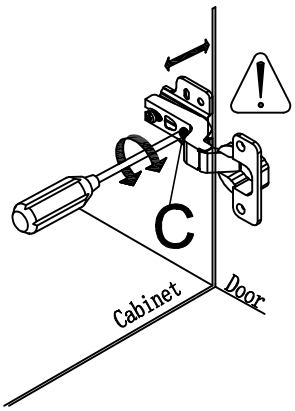

If you find a large gap between or beside the doors. Don't worry,It's not the problem with product.

To adjust side ways.
Turn screw"C"clockwise or counterclockwise on both hinges until the door is in the desired position.

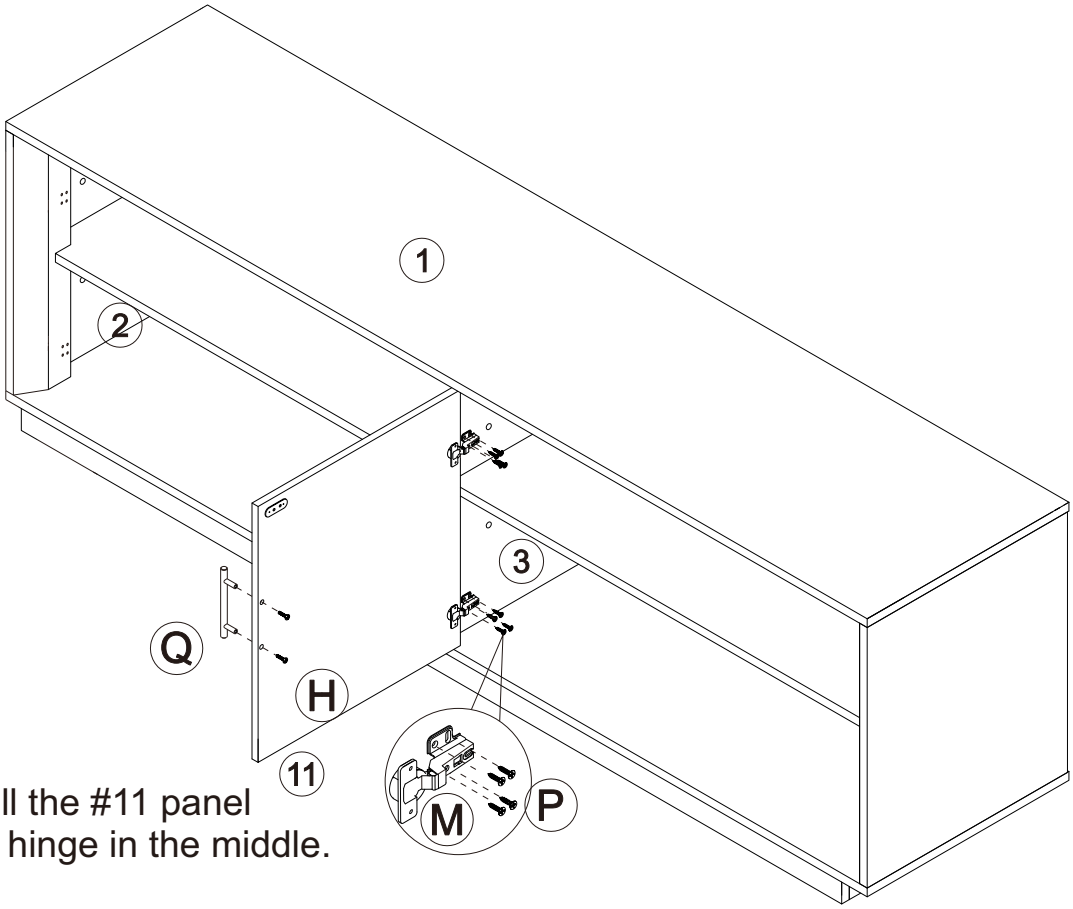

NOTE:Install the #11 panel with the #M hinge in the middle.

step1 step2 step3 step4 step5

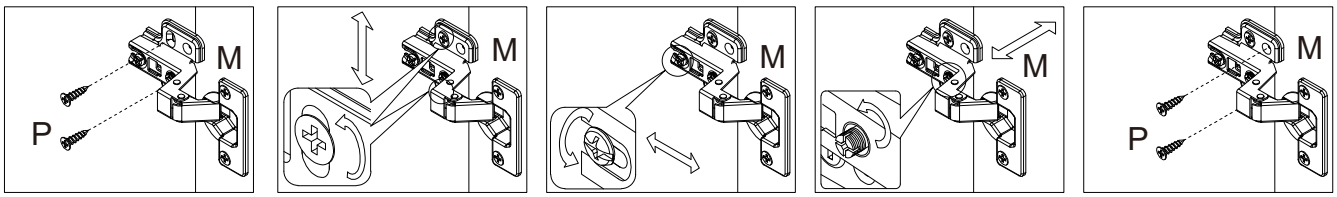

18.

⌀3.5X12MM		M4X22mm	
P	x8	Q	x1	H	x2

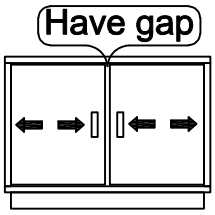

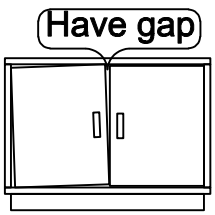

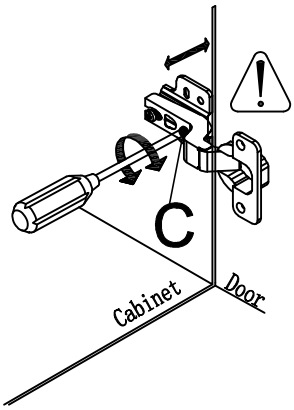

If you find a large gap between or beside the doors. Don't worry,It's not the problem with product.

To adjust side ways.
Turn screw"C"clockwise or counterclockwise on both hinges until the door is in the desired position.

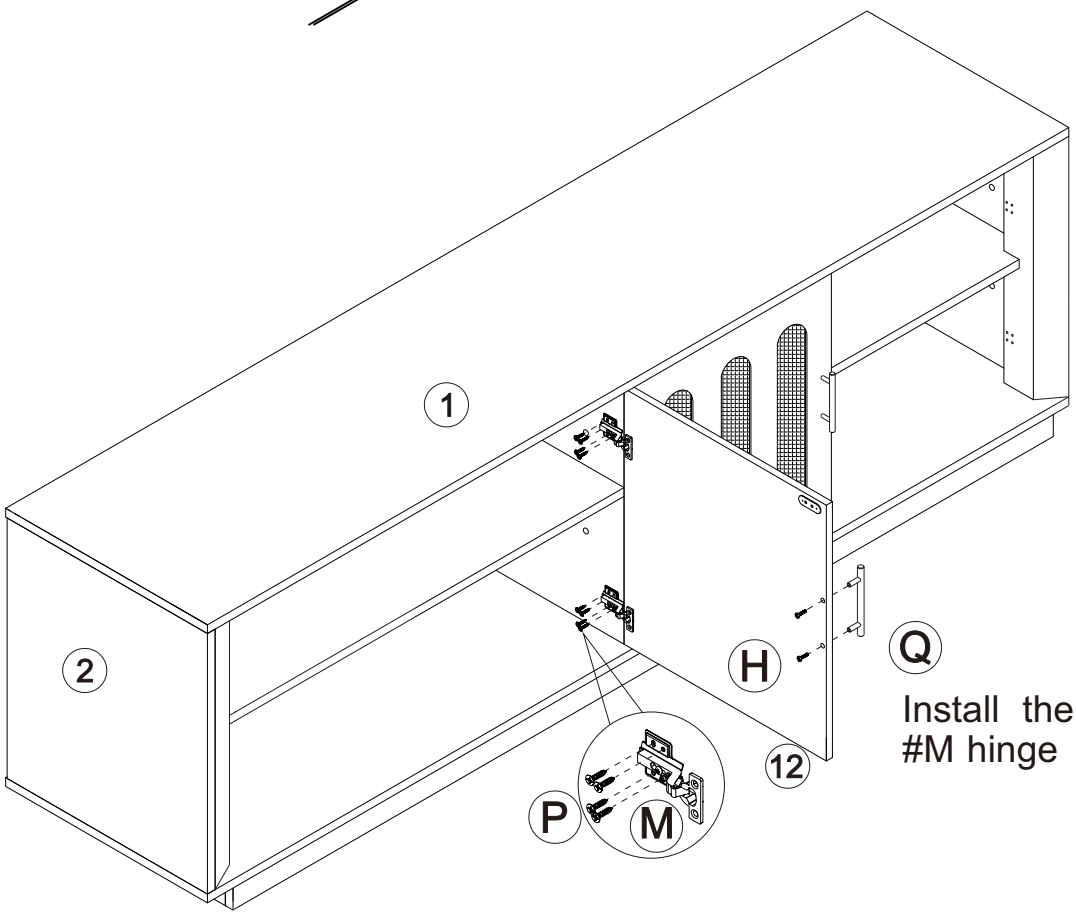

Install the #12 panel with the #M hinge in the middle.

step1

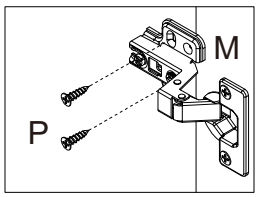

step2

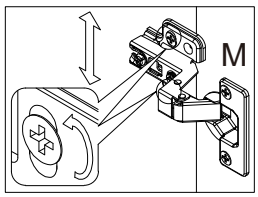

step3

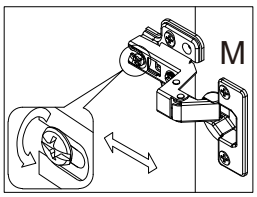

step4

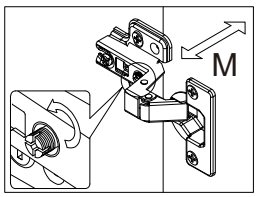

step5

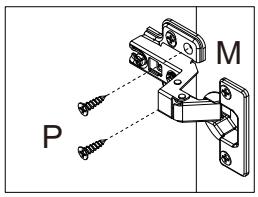

19.

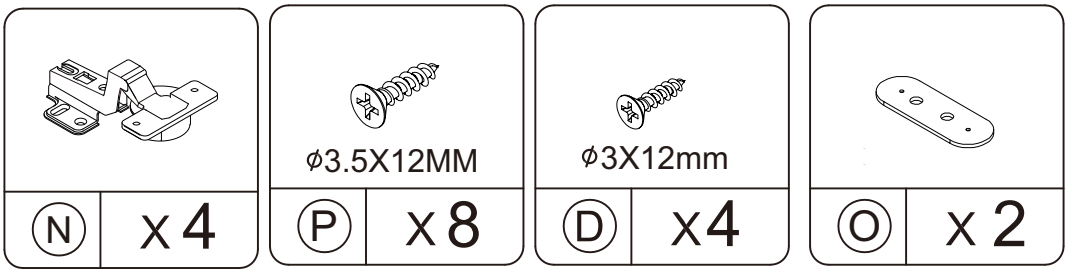

NOTE:Install the #N hinge on another #11 panel and another #12 panel

NOTE:Pleased distinguish the M or N hinges

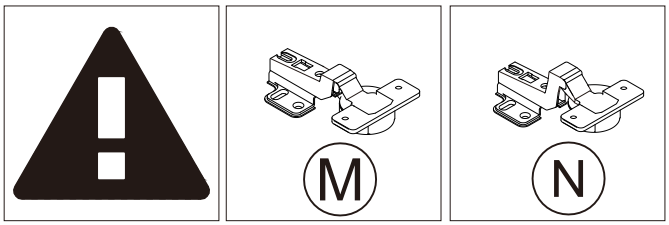

20.

⌀3.5X12MM				M4X22mm	
P	x16	Q	x2	H	x4

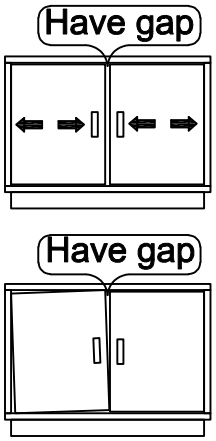

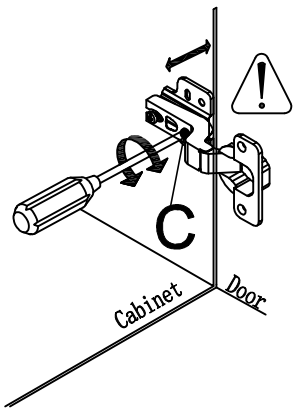

If you find a large gap between or beside the doors. Don't worry,It's not the problem with product.

To adjust side ways.
Turn screw"C"clockwise or counterclockwise on both hinges until the door is in the desired position.

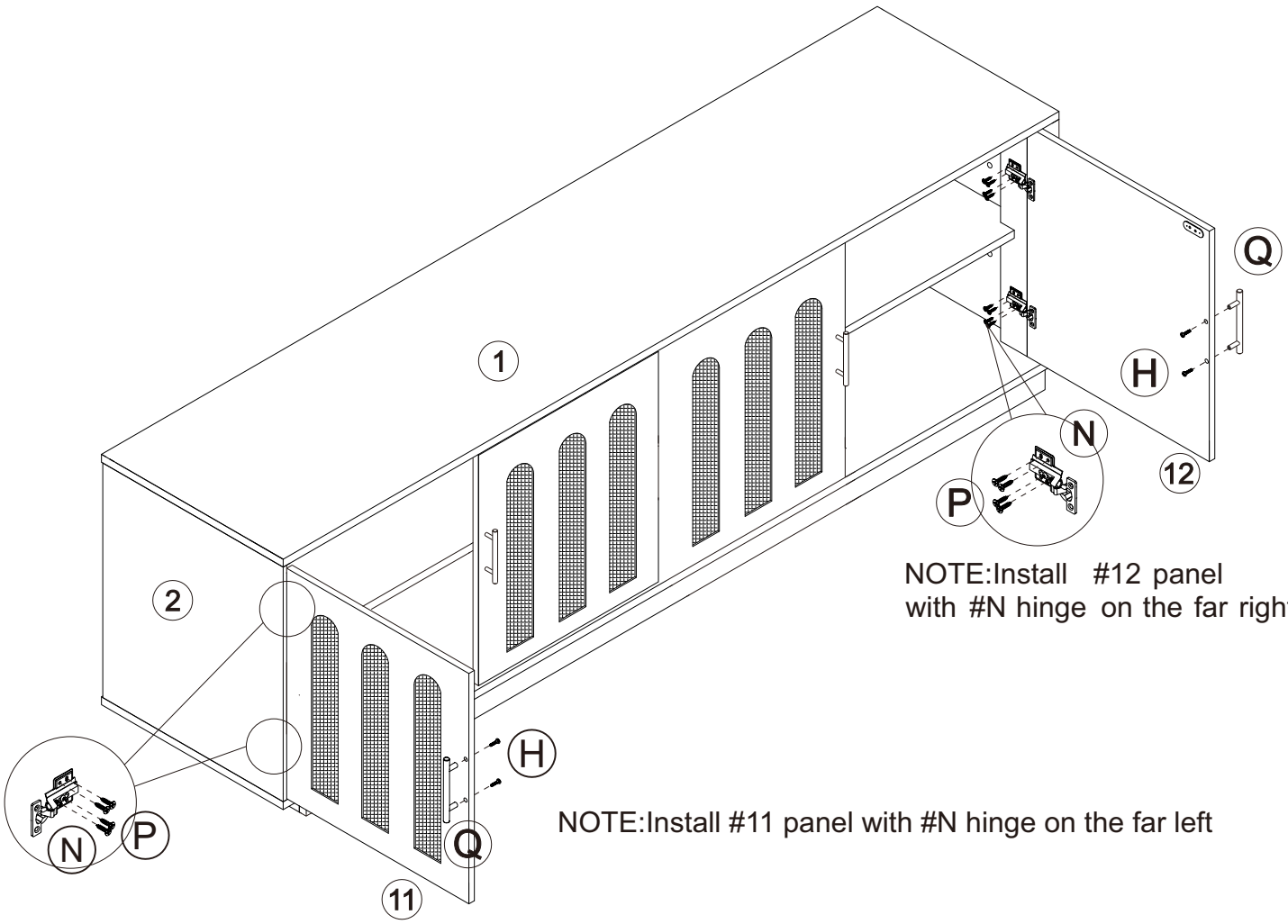

NOTE:Install #12 panel with #N hinge on the far right

NOTE:Install #11 panel with #N hinge on the far left

step1

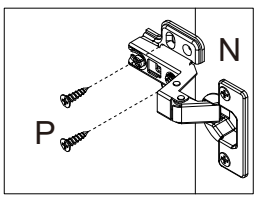

step2

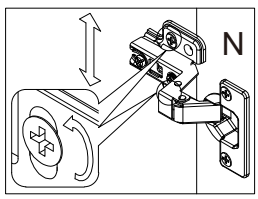

step3

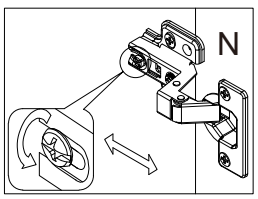

step4

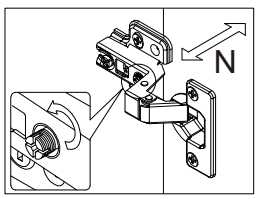

step5

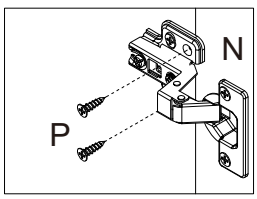

⚠ WARNING

For use with televisions weighing 100 lbs (45.36kg) or less. Use with heavier televisions may result in instability, causing tip over resulting in death or serious injury.

Death or serious injury may occur when children climb on audio and/or video equipment furniture. A remote control or toys placed on the furnishing may encourage a child to climb on the furnishing and as a result the furnishing may tip over on to the child.

Relocating audio and/or video equipment to furniture not specifically designed to support audio and/or video equipment may result in death or serious injury due to the furnishing collapsing or over turning onto a child.

⚠ NOTICE

This stand is intended for up to a 75" flat panel TV. Do not exceed the maximum load capacity.

This product is designed for flat panel TVs only.