Kids' Electric Vehicles

Product ID. 7LKXT

Scan for Support
support@garvee.com

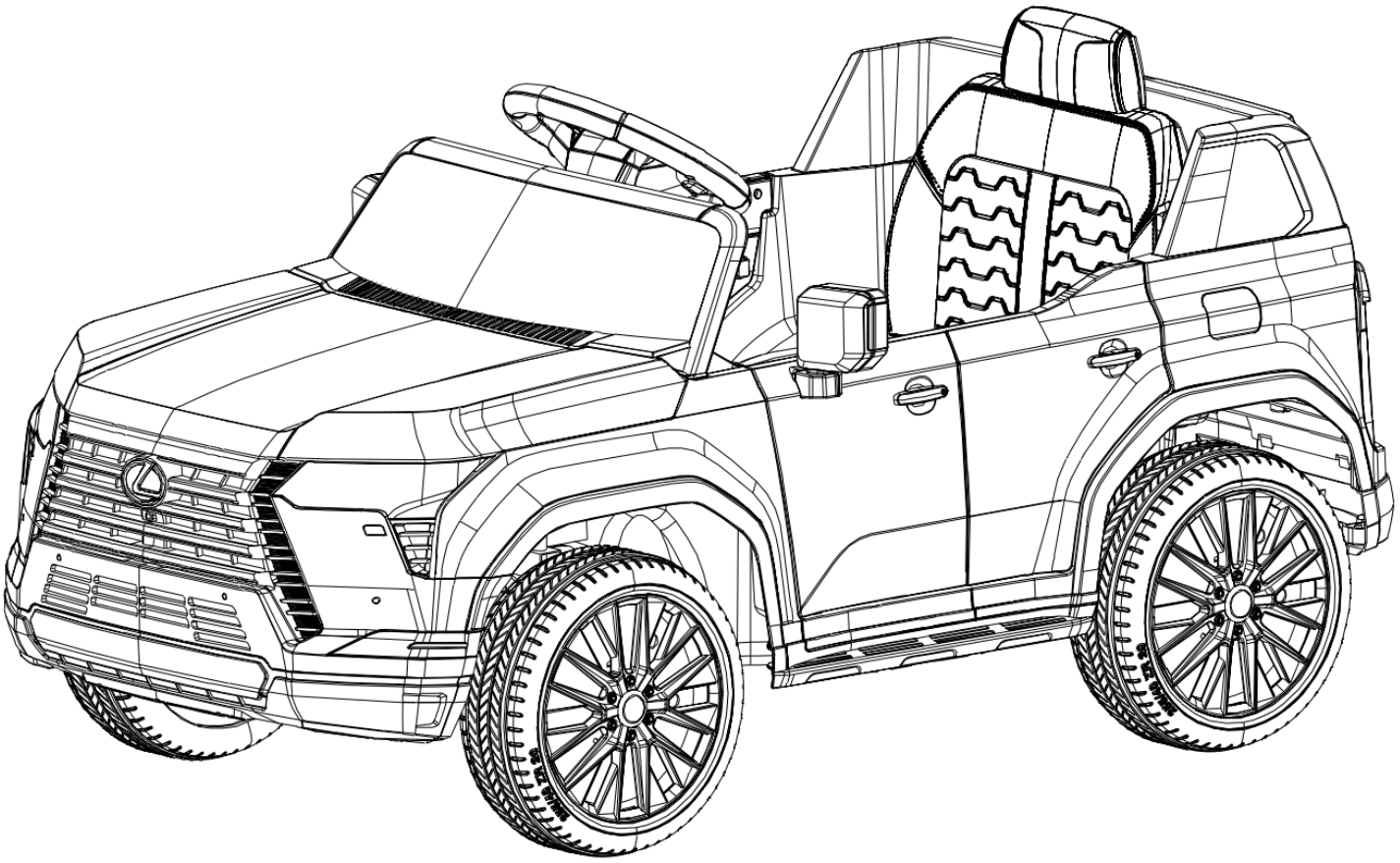

Distributed by
GARVEE.com

IMPORTANT

You must charge your battery for 12 hours before you use your vehicle for the first time.

Remember to...

- ✔ Charge the battery immediately after each use.
- ✔ Charge the battery at least once a month during storage, even if the vehicle has not been used.

The battery will be permanently damaged and void your warranty if you fail to follow the instructions. Please refer to the Battery Care Section in this manual for more information.

Important Information

- Your new vehicle requires adult assembly. Please set aside at least 30 minutes for assembly.
- You must charge your battery for 12 hours before you use your vehicle for the first time. We recommend that you start charging battery before beginning assembly. Please see battery charging beginning on page 6 for detailed instructions.
- Read this manual carefully for important safety information and operating instructions before using your vehicle. Keep these instructions for future reference as they contain important information.
- This vehicle is designed for use on: concrete, asphalt or other hard surfaces: on generally level terrain: by children ages 3 and up.
- Instruct the children on operation and safe driving rules before they take their first drive:
  - Always sit in the seat.
  - Always wear shoes.
  - Only one (1) rider at a time.
  - Do not place hands, feet or any part of the body, clothing or other articles near moving parts while the vehicle is in operation.
  - Do not allow other children near the car when driving.
- Use this vehicle ONLY outdoors. Most interior flooring can be damaged by riding this vehicle indoors.
- To prevent damaging the motors and gears, do not tow anything behind the vehicle or overload it. Do not exceed the maximum weight capacity of 55 lbs (25 kgs)

Warning

To Prevent Serious Injuries

- This product is intended for use by children ages 3 and up, and is not intended for children under 3 years of age due to lack of ability to operate safety
- Maximum weight 55 lbs (25 kgs). Maximum 1 rider at a time.
- Do not leave children unattended. Adult supervision is required.
- This package contains small parts. Keep away from the children until assembled.
- Read manual for detailed safety information prior to use.
- Inspect product at regular intervals for wear or loose hardware and tighten as required. Remove from service if any abnormal conditions such as cracks or breaks exist.
- Check all coverings regularly to make sure they are in place.
- Batteries can fall out and injure a child if the vehicle tips over. Always use the battery cover.
- When the temperature falls below OF(18°C) outdoor use of this product is not recommended.
- In extreme cold, plastic materials might lose resilience and may become brittle and crack upon impact. Store in a warmer and protected place.
- Do not operate the vehicle outdoors if it is raining. Keep it in a dry area when not in use.
- Disconnect the battery power supply when the vehicle is not in use to prevent the children driving the car without adult supervision.
- Always make sure the seat is securely attached.
- The charger and battery are not toys and must be regularly examined for damage to the cord, plug, enclosure and other parts.
  In the event of damage, the damage or worn part must not be used until replaced.
- Never modify the electrical system. Use of the wrong type battery or charger could cause a fire or explosion.
- The battery compartment and area under seat are not storage areas. Storing other articles may create a fire hazard. Do not store any articles in or near motor compartment.

Safe Driving Rules

- **ADULT SUPERVISION REQUIRED. MAKE SURE CHILDREN KNOW AND FOLLOW THESE RULES FOR SAFE DRIVING.**

- Restrict children to safe riding areas:
  - Away from swimming pools and other bodies of water to prevent drowning.
  - Level ground to prevent tip overs and unintended downhill motion.
  - Away from steps, hills, driveways, roads and alleys.
- Teach and learn the safety first:
  Although most children can master the physical driving skills to control the vehicles, they do not have the mature judgment skills. Never let a child drive at any time without adult supervision, and take the time to carefully evaluate child's skill levels and abilities to operate the vehicle safely. Children cannot always recognize the hazards even after instruction so teach appropriate safety rules before allowing any child to operate vehicle, and remember that THERE IS NO SAFE SUBSTITUTE FOR DIRECT ADULT SUPERVISON.

- **Riding rules:**
  - Always sit on the seat and wear shoes.
  - Maximum one rider at a time.
  - Do not operate in the street or near moving vehicles.
  - Do not operate near bodies of water, obstructions or drop-offs.
  - Do not operate on sand, dirt or gravel.
  - Do not operate in the dark. Unexpected obstacles could cause an accident.
  - Do not operate on inclines or steep slopes.
  - Do not operate near flammable vapors (e.g. gasoline, paint thinner, acetone, liquid wax, etc.) Using the vehicle near flammable liquids can or vapors could cause an explosion or fire.
  - Do not place anything near moving parts such as motors, gears or wheels. Rotating parts can snag hair, fingers, etc., which may cause serious injury.

Battery Warning

4

ELECTRICAL HAZARD

⚠ WARNING

Battery can fall out and injure a child if vehicle tips over. Always use battery cover.

PREVENT FIRE

- Never modify the electrical system. Alterations could cause a fire resulting.
- Use of the wrong type battery or charger could cause a fire or explosion resulting in serious injury.

- The battery must be handled by adults only. The battery is heavy and contains sulfuric acid (electrolyte). Dropping the battery could result in serious injury.
- Never allow children to charge the battery.
- Battery charging must be done by adults only. A child could be injured by the electricity involved in charging the battery.
- Never lift or carry the battery by the wires or connector. This can damage the battery and possibly cause a fire resulting in serious injury. Lift and carry the battery by the case only.
- Read the safety instructions on the battery
- Examine the battery, charger and all connectors for excessive wear or damage each time you charge the battery. If damage or excessive wear is detected, do not use the charger or the battery until you have replaced the worn or damaged part.

⚠ CAUTION

Only use the charger in dry locations.

About Thermal Fuses

- Your 12 volt battery is equipped with a built-in thermal fuse. The thermal fuse is a self-resetting safety device which automatically trips and shuts down operation of the vehicle if the vehicle is overloaded or the driving conditions too severe. Once a fuse has tripped it will automatically reset itself after approximately 10 seconds and allow the vehicle to resume normal operations. To avoid repeated automatic shut downs, do not overload the vehicle by exceeding the 55 lbs (25 kgs) maximum weight capacity or by towing anything behind the vehicle. Avoid severe driving conditions, such as driving up very steep slopes or running into fixed objects, which can cause the wheels to stop spinning while power is still being supplied to the motors.

Important Notes

- Your new battery must be charged for at least 12 hours before you use it in your vehicle for the first time.
- You do not need to remove the battery from your vehicle to recharge it.
- The battery must be upright while charging.
- The charger is not a toy.
- Do not short circuit the battery.
- We recommend that you start charging your battery before beginning assembly of your new vehicle.
- Before charging the battery, examine the battery case for cracks and other damage which may cause sulfuric acid (electrolyte) to leak during the charging process.
- If damage is detected, do not charge the battery or use it in your vehicle. Battery acid is very corrosive and can cause severe damage to surfaces it contacts.
- Do not charge the battery on a surface which could be damaged by the acid contained inside the battery. Take precautions to protect the surface on which you charge your battery.
- If your battery is old and will not accept a charge, do not leave it in the vehicle. Always remove a dead battery from the vehicle.
- Non-rechargeable batteries are not to be recharged.
- Rechargeable batteries are only to be charged under adult supervision.
- Only batteries of the same or equivalent type as recommended are to be used.
- Batteries are to be inserted with the correct polarity.
- Exhausted batteries are to be removed from the toy.
- The supply terminals are not to be short-circuited.

Battery Warning

⚠ CAUTION

- Non-rechargeable batteries are not to be recharged.
- Make sure the charger connector is matching with the battery connector.
- Make sure the brand, voltage and frequency of the chargers are in accordance with the wall outlet.
- Batteries are to be inserted with the correct polarity.
- The supply terminals are not to be short circuited.

Charge the battery :
The first charge will take about 12 hours.



Charge the battery directly from the socket near the seat.

- Plug the battery connector into the charger port.
- Plug the charger into a standard wall outlet.
- Only use the 12 volt charger to charge your 12 volt battery.
- Note: If Power flow to the wall outlet is controlled by a switch, make sure the switch is “ON”.
- Before first-time use, charge the battery for at least 12 hours. Never charge the battery longer than 24 hours.
- Recharge the battery for at least 8 -10 hours after each use of your vehicle.
- Do not charge the battery longer than 24 hours.
- Do not charge or store the battery upside down. Charging may produce gases. Charge away from flames, sparks and lit cigarettes. Charge in a well-ventilated area.
- Once the battery is charged, disconnect the battery connector from the charger connector. Unplug the charger from the wall outlet. The battery is now ready to be installed to your vehicle.

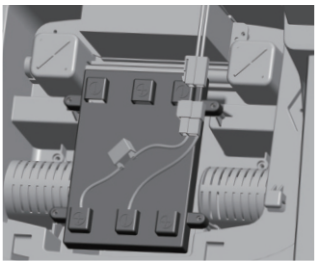

Battery replacement

1. Lift the seat out
2. Disconnect the battery connectors
3. Remove the 4 screws on the sides of the battery
4. Take out the battery from the battery compartment

Battery Care and Disposal

6

Care

- If a battery leak develops, avoid contact with the leaking acid and place the damaged battery in a plastics sealed bag.
- If acid comes in contact with skin or eyes, flush with cool water for at least 15 minutes and call a physician immediately.
- If acid is internally ingested, give water, milk of magnesia or egg whites immediately. Never give emetics or induce vomiting. Call a physician immediately.
- Charge a new battery for at least 12 hours before first use,
- Never charge the battery longer than 24 hours.
- Overcharging or undercharging the battery may shorten battery life and decrease vehicle running time.
- After the first charge, recharge the battery for at least 8 - 10 hours after each use. Never charge the battery longer than 24 hours. Charge the battery after each use, regardless of how long the vehicle was used.
- The battery must be upright while charging.
- Do not allow the battery to run down completely before charging.
- Charge the battery before storing the vehicle.
- Charge the battery at least once per month, even if the vehicle has not been used.
- Leaving the battery in a discharged condition will ruin it.
- If the vehicle will be stored for more than two months, be sure to disconnect the motor harness from the battery.
- Do not store the battery in temperatures above 75°F or below-10°F.
- Prevent the battery from moving freely inside the battery compartment. Make sure all screws for battery cover tighten.
- Examine the battery, charger and its connector for excessive wear or damage each time you charge the battery. If damage is detected, do not use the charger or the battery until you have replaced the worn or damaged part.
- Remember to remove an exhausted battery from the vehicle.
- Battery leakage and corrosion can damage the vehicle.

Disposal



- Your battery is a sealed lead-acid battery. It must be recycled or disposed of it in an environmentally sound manner.
- Never dispose your battery in the regular, household trash. The incineration, landfilling or mixing of sealed lead-acid batteries with household trash is prohibited by law in most areas.
- Always remove exhausted batteries from your toy.
- Dispose of dead batteries properly, never burn or bury them.
- Do not dispose of a lead-acid battery in a fire. The battery may explode or leak.

TO PROLONG BATTERY LIFE, YOU MUST RECHARGE THE BATTERY AFTER EACH USE. YOU MUST ALSO CHARGE YOUR BATTERY IF IT HAS NOT BEEN USED FOR 30 DAYS OR MORE.

Parts List

- Please identify all parts before assembly and save all packaging material until assembly is completed to ensure that no parts are discarded.
- Metal parts have been coated with lubricant for protection during shipment. Wipe all metal parts with a paper towel to remove any excess lubricant.



Main Body



Steering Wheel



Charger



Seat Cushion



Front Wheel x 2



Rear Wheel x 2



Wheel Cover x 4



Seat Back



Side Mirror x 2



Windshield



Rear Window Assembly



Nut x 1
(M8) (Spare)



Socket Tool x 2



Screw x 16
(4 x 12mm)



Washer x 2
(10 x 1.5mm)



Washer x 4
(8 x 1.3mm)

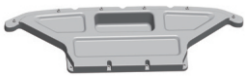

Back Bracket

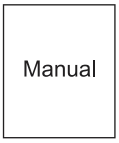

Manual

Remote Control Operation. please read the attached manual separately.

Assembly

⚠ WARNING

Children can be harmed by small parts, sharp edges and sharp points in the vehicles unassembled state, or by electrical items. Care should be taken in unpacking and assembling the vehicle. Children should not handle parts, including the battery, or help in the assembly of the vehicle.

① Flat head screw (4 x 12mm)

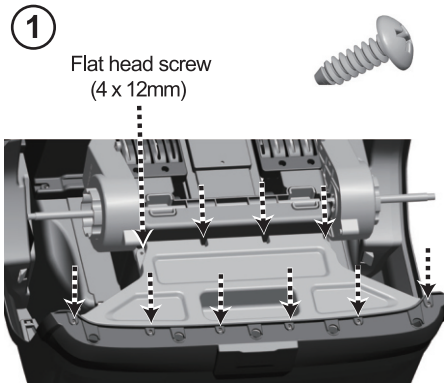

Insert the back bracket and fasten it with 10 screws.

② Front wheel, Washer (10 x 1.5mm), Wheel cover

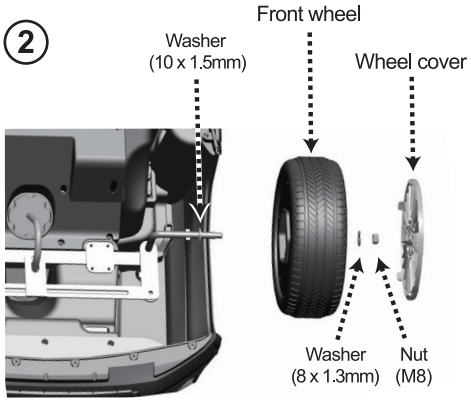

For front wheels: Assemble all the parts in sequence as the picture shown and use the socket tool to fasten. Repeat the same procedure for the other side.

③ Rear wheel, Wheel cover

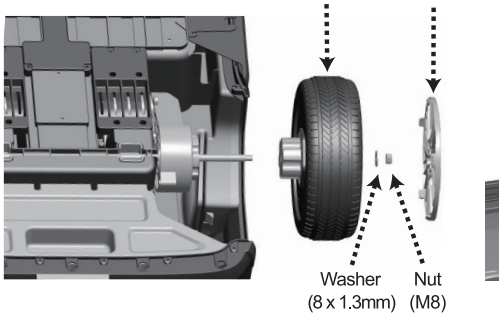

For rear wheels: Assemble all the parts in sequence as the picture shown and use the socket tool to fasten. Repeat the same procedure for the other side.

④



For all wheels: “Snap” the wheel cover into the right place. Repeat the same procedure for other three wheels.

Assembly

⑤



Plug connectors. Place the steering wheel onto the turning shaft and push the buttom on the steering column until you hear a snapping sound(or click). Ensure the steering lock is engaged.

⑥



Insert the windshield to the slots of the main body.

⑦



Insert the rear window assembly to the main body.

⑧

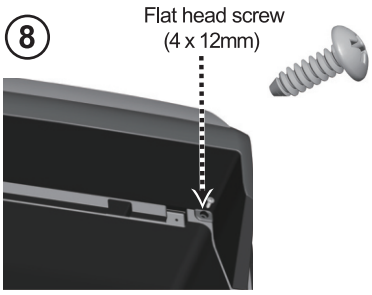

Fasten it with 1 screw.
Repeat the same procedure for the other side.

⑨

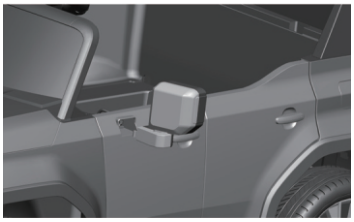

Insert the side mirror. Repeat the same procedure for the other side.

⑩



For battery: Plug connector as picture shown.

Assembly

10

⑪



Insert the seat cushion.

⑫

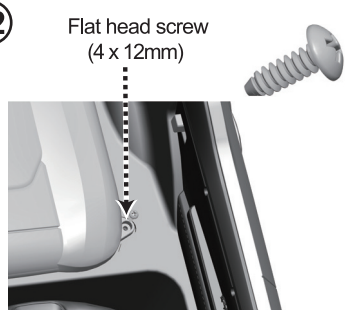

Fasten it with 1 screw. Repeat the same procedure for the other side.

⑬



Insert the seat back.

⑭

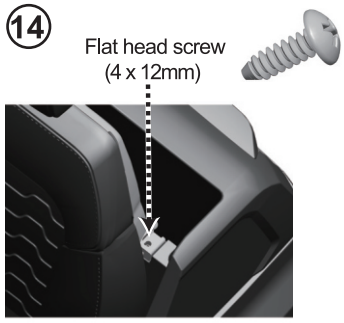

Fasten it with 1 screw. Repeat the same procedure for the other side.

Operating your Vehicle



Power switch
Switch button ON and OFF.

Forward
Push the shifter in upward position and press the accelerator slowly.

Reverse
Push the shifter in downward position and press the accelerator slowly.

Low speed
Vehicle has been pre-set to operate at low speed (1.5 mph, (3.0 kmh) maximum). Once your child has mastered safe driving skills and understands the Safe Driving Rules.

High speed
Vehicle to be driven at the higher speed (2 mph. (3.5 kmh) maximum). Make sure your child can safely steer and operate the vehicle and knows the rules for safe driving.

Stop
Vehicle will automatically stop after the accelerator is released.

Sound effect
Press the buttons on the sides of the steering wheel. Each button will make a different sound effect.

Safety device
AUTO POWER OFF. If the motor is overloaded for any reason, including improper usage, an electrical circuit breaker will automatically cut off the power, then resume after the parts have cooled!

Maintenance
- Clean with a dry, soft cloth only. Do not wash with water or corrosive agents.
- Store vehicle in a dry area when not in use, since moisture could cause the metal components and electrical parts to corrode.
- Remember to charge the battery monthly while the vehicle is not in regular use.
- Check and tighten all screws and coverings regularly.
- Check all plastic parts for cracks. Replace as necessary.

Troubleshooting

12

Problem	Possible Cause	Solution
Car does not move	Circuit breaker tripped	Circuit breaker may “trip” and stop the vehicle if it is overloaded or the driving conditions too severe. The breaker will automatically reset after approximately 10 seconds, and the vehicle will operate normally. To avoid repeated automatic shut downs, do not overload the vehicle by exceeding the weight limited of 55 lbs (25 kgs). Or by towing anything behind the vehicle. Do not drive up hills or run into fixed objects, which can cause the wheels to stop spinning while power is still being supplied to the motors. If breaker continually trips, contact your service center.
	Loose wire or connectors	Check all wires and connectors. Make sure that the motor harness connector is plugged in tightly to the battery, and that there are no loose wires around the motor.
	Dead battery	An old or improperly cared battery may be dead. If you are unsure whether it is dead or not, you can have it tested at your Service Center.
	Undercharged battery	A new battery should have been charged for at least 12 hours before using the vehicle for the first time. After that, it must be recharge the battery for at least 8-10 hours after each use. Never charge longer than 24 hours. Check all connectors and make sure the charger is plugged into the wall. Make sure the power flow to the outlet is on.
	Charger is not working	You must have a volt meter in order to tell whether the charger is working or not. If you think there may be a problem with the charger, take it to the service center where they will test it for you.
	Damaged switch	When exposed to water or moisture, switches can become corroded, or can jam due to dirt, sand or gravel. Contact your service center for diagnosis and repair.
Car was running but suddenly stopped	Loose wire or connectors	Check all wires and connectors. Make sure that the motor harness connector is plugged into the battery tightly, and that there are no loose wires around the motor.
	Circuit breaker tripped	Circuit breaker may “trip” and stop the vehicle if it is overloaded or the driving conditions too severe. The breaker will automatically reset after approximately 10 seconds, and the vehicle will operate normally. To avoid repeated automatic shutdowns, do not overload the vehicle by exceeding the weight limited of 55 lbs (25 kgs), or by towing anything behind the vehicle. Do not drive up hills or run into fixed objects, which can cause the wheels to stop spinning while power is still being supplied to the motors. If breaker continually trips, contact your service center.

Troubleshooting

Problem	Possible Cause	Solution
Short operating time(less than 1 hours per charge)	Undercharged battery	A new battery should have been charged for at least 12 hours before using the vehicle for the first time. After that, it must be recharge the battery for at least 8-10 hours after each use. Never charge longer than 24 hours. Check all connectors; make sure the charger is plugged into the wall. Make sure the power flow to the outlet is on.
	Overcharged battery	Never charge battery longer than 24 hours. If you think the battery may be damaged due to overcharging, contact service center for testing.
	Old battery will not accept a full charge	Even with proper care, a rechargeable battery does not last forever. Average battery life is 1 to 3 years depending on vehicle use and use conditions. Replace the battery with a new volt rechargeable battery. Do not substitute parts. To get a replacement battery, please contact service center.
Vehicle is sluggish	Undercharged battery	A new battery should have been charged for at least 12 hours before using the vehicle for the first time. After that, it must be recharged the battery for at least 8 -10 hours after each use. Never charge longer than 24 hours. Check all connectors and make sure the charger is plugged into the wall. Make sure the power flow to the outlet is on.
	Battery needs charging	Make sure to charge the battery after each use.
	Old battery will not accept a full charge	Even with proper care, a rechargeable battery does not last forever. Average battery life is 1 to 3 years depending on vehicle use and use conditions. Replace the battery with a new rechargeable battery. Do not substitute parts. To get a replacement battery, please contact service center.
	Vehicle is overloaded	Allow no more than 1 rider at a time, follow the 55 lbs (25kgs) weight capacity and don't tow anything behind the vehicle.
	Driving conditions are too stressful	Use only on a generally level ground.

Troubleshooting

Problem	Possible Cause	Solution
Intermittent vehicle operation	Loose wire or connector	Check all wires around the motors and all connectors to make sure they are tight.
	Motor or electrical switch damage	Contact your service center for diagnosis and repair.
When the accelerator is pressed, the vehicle won't run without a push	Loose wire or connector	Check all wires around the motors and all connectors to make sure they are tight.
	"Dead Spot" on motor	Contact your service center for diagnosis and repair.
Motor gear box makes a loud grinding or clacking noise	Broken gears	Contact your service center for diagnosis and repair.
Charger get warm during use	This is normal and should not be a concern	No action required.
Battery makes gurgling or sizzling noise while charging	Some noise and swelling is normal and should not be concern	No action required. If the battery does not make noise while charging. It does not mean it isn't accepting the charging.

Parts Diagram

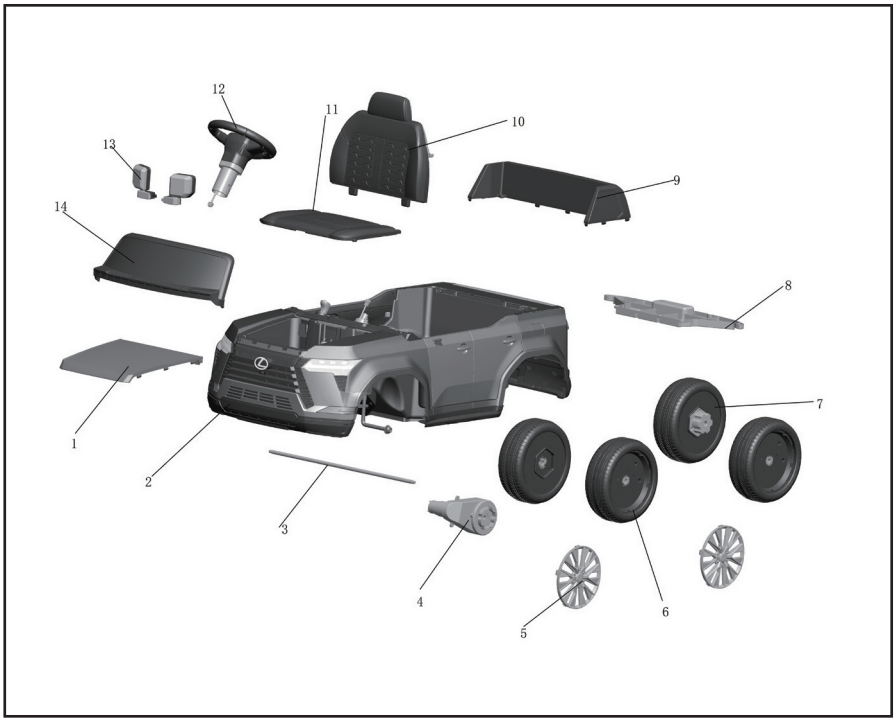

Note:Some parts shown are assembled to both sides of the vehicle.

No. Part	Quantity	No. Part	Quantity
1. Hood	1	9. Rear Window Assembly	1
2. Main Body	1	10. Seat Back	1
3. Rear Axle	1	11. Seat Cushion	1
4. Gearbox	2	12. Steering Wheel	1
5. Wheel Cover	4	13. Side mirror	2
6. Front Wheel	2	14. Windshield	1
7. Rear Wheel	2		
8. Rear Bracket	1		

Manufacturer: JIAXING HARLEY BABY CAR CO.,LTD
Address: NO.123, JINSHA ROAD,XINCANG TOWN, PINGHU CITY, ZHEJIANG PROVINCE, CHINA
US IMPORTER: Favoreliable Trading LLC
ADDRESS: 6545 Market Ave. North, STE 100, North Canton , OH 44721
Email: support@garvee.com

0-3

GARVEE

support@garvee.com