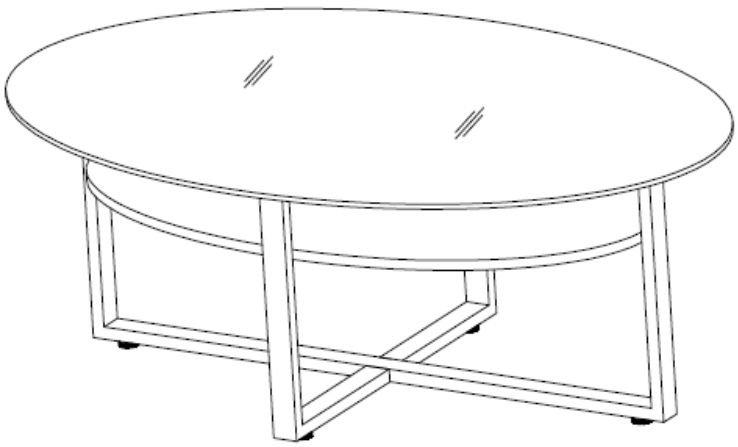

PARTS

①		M6X12 20PCS
②		M6X25 4PCS
③		4PCS
		

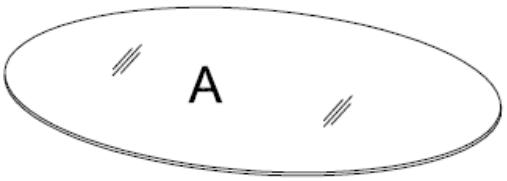

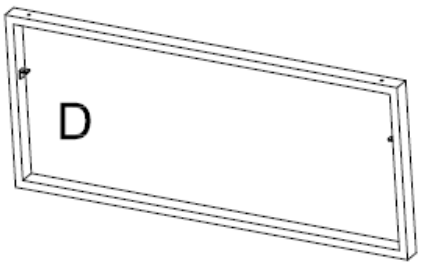

CX2



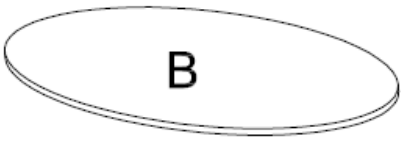

EX4



1

① X8

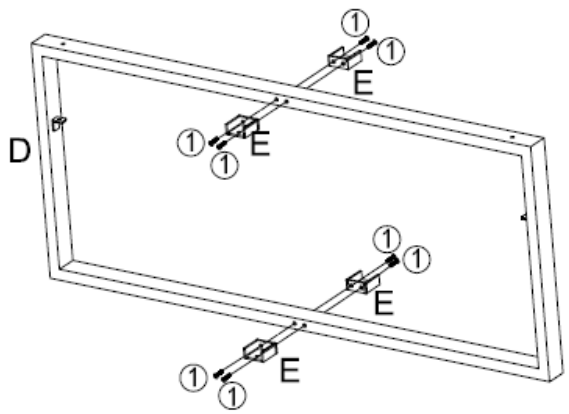

2

① X4

③ X3

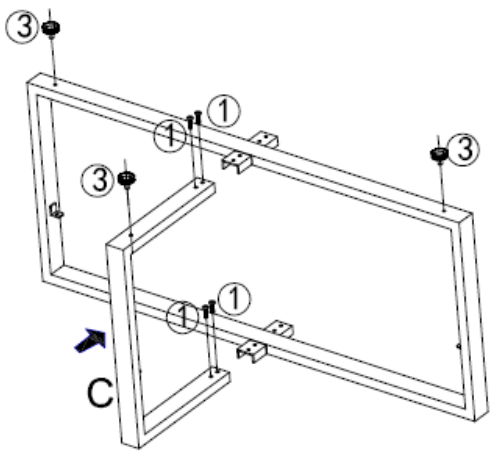

3

① X3

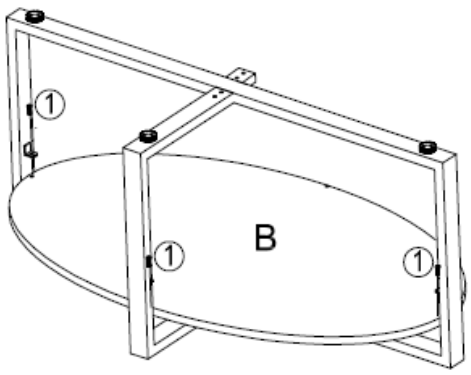

4

① X5

③ X1

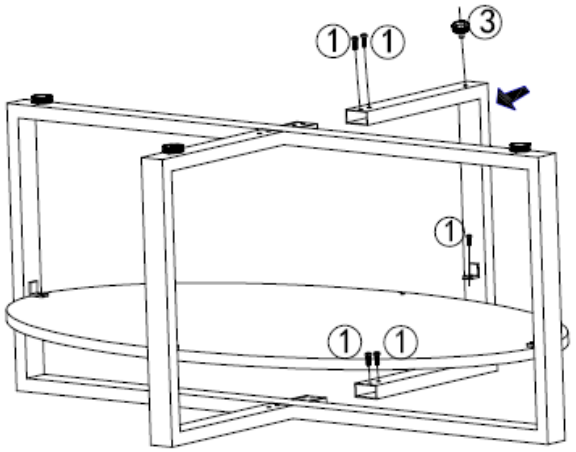

5

② X4

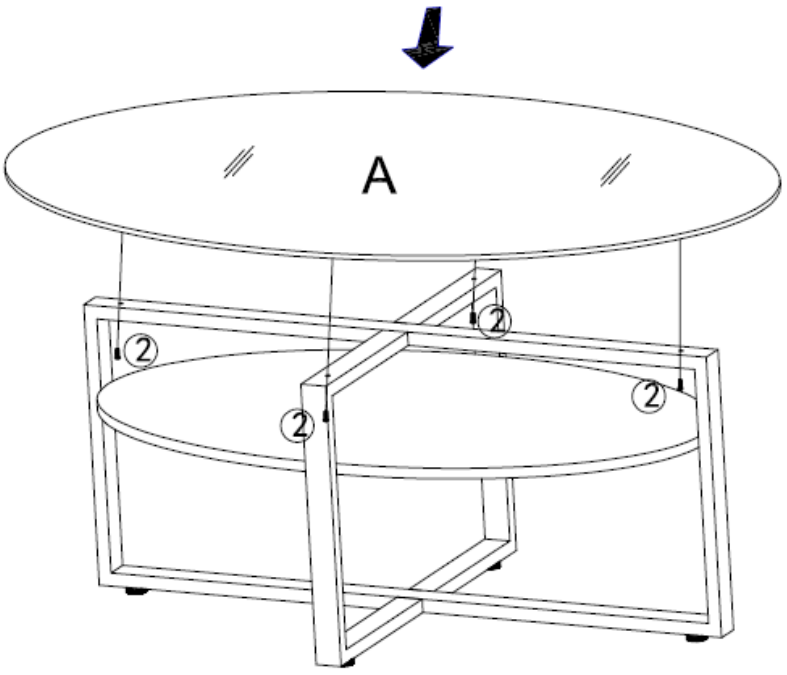

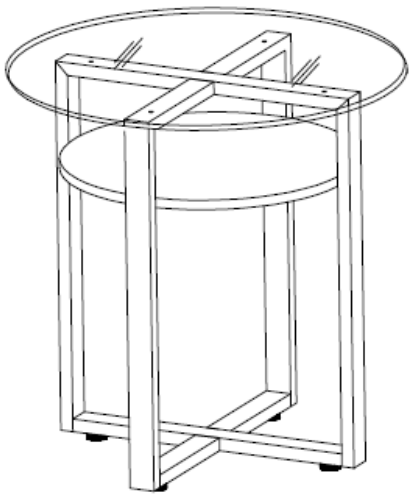

PARTS

①		M6X12 20PCS
②		M6X25 4PCS
③		4PCS
		



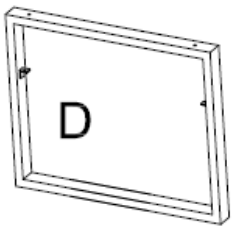

CX2





EX4



1

① X8

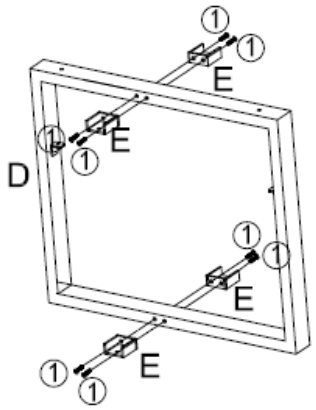

2

① X4
③ X3

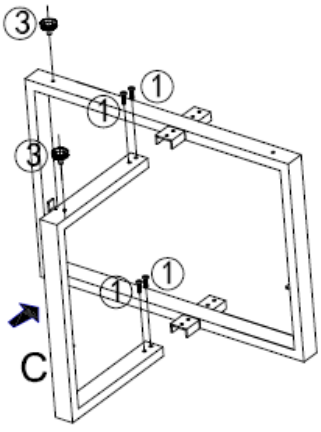

3

① X8

③ X1

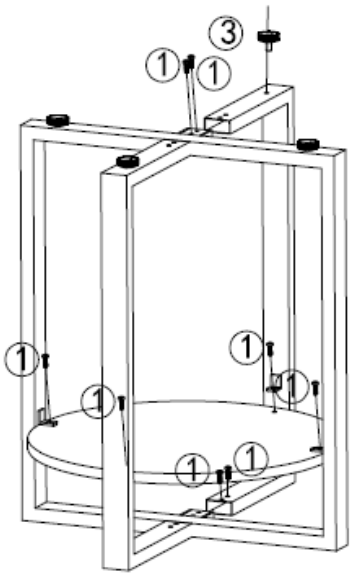

4

② X4

