SOFA BED

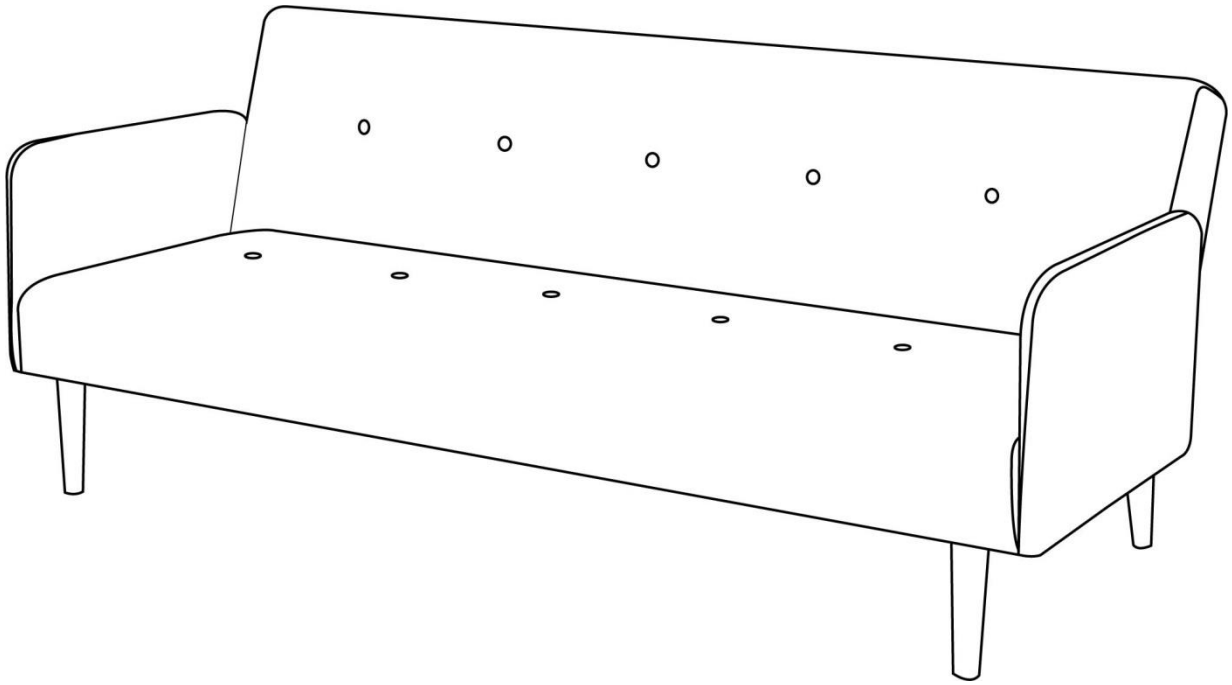

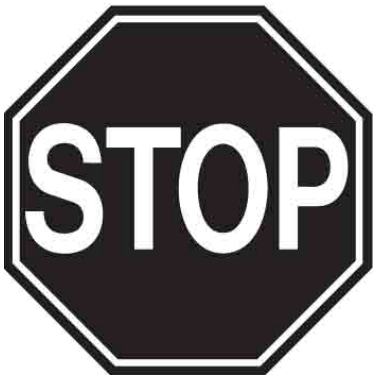

Questions, problems, assembly help, missing parts?

No need to return the product, we will gladly help and ship your replacement parts free of charge

In order to assist you in a timely manner, please have the following information ready:

Model # _____ Part Number or Letter _____

Purchased at _____Date of Purchase _____

If you wish to return the product, please contact the retailer where the product was purchased.

IMPORTANT: Please read this manual carefully before beginning assembly of this product. Keep this manual for future reference.

SAFETY INFORMATION

Identify all the parts and hardware. Do not discard of the packaging until you have checked that you have all of the parts and hardware required. Hardware package may have spare parts.

WARNING: This item contains small parts which can be swallowed by children and pets. Keep children and pets away during assembly. To avoid danger of suffocation, always keep plastic bags away from children and pets.
We recommend that you assemble this unit on a carpeted floor to avoid scratches. We do not recommend the use of power tools for assembly as this could damage the unit. Only use manual tools.

Requires 2 people for ease of assembly.

CARE and MAINTENANCE

Wipe regularly with clean water and a damp, clean, soft white cloth.
General cleaning can be done as needed with a mild detergent and water solution. Always rinse with clean water and dry.
For heavy soiling, dampen a soft white cloth or soft bristle brush. Use care as scrubbing can damage the surface.
More difficult stains can be treated, but this should be occasional, not daily, cleaning. ANY cleaning solution used must be removed with clean water and a clean white cloth. Cleaning residue left on the material can cause it to dry out and crack, or affect the color.
DO NOT use any cleaners with corrosive ingredients (lye, acids or ammonia).

PRE-ASSEMBLY INFORMATION

PARTS DESCRIPTION

A

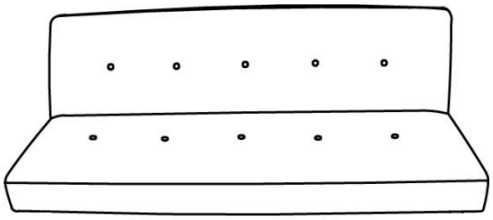

SOFA BED
QTY 1

B

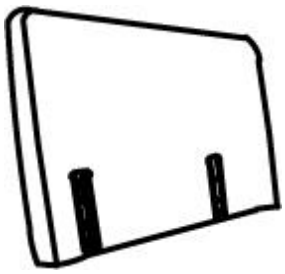

ARM
QTY 2

C

FRONT LEG
QTY 2

D

BACK LEG
QTY 2

NEED HELP? For help with assembly or if you are missing a part, Please call customer service.

PRE-ASSEMBLY INFORMATION

HARDWARE DESCRIPTION

1	2	3
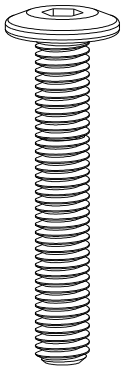		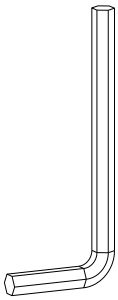
ALLEN KEY SCREW M8x60MM QTY 4	FLAT WASHER Ø18MM QTY 4	ALLEN KEY 5MM QTY 1

NEED HELP? For help with assembly or if you are missing a part, Please call customer service.

ASSEMBLY

STEP 1

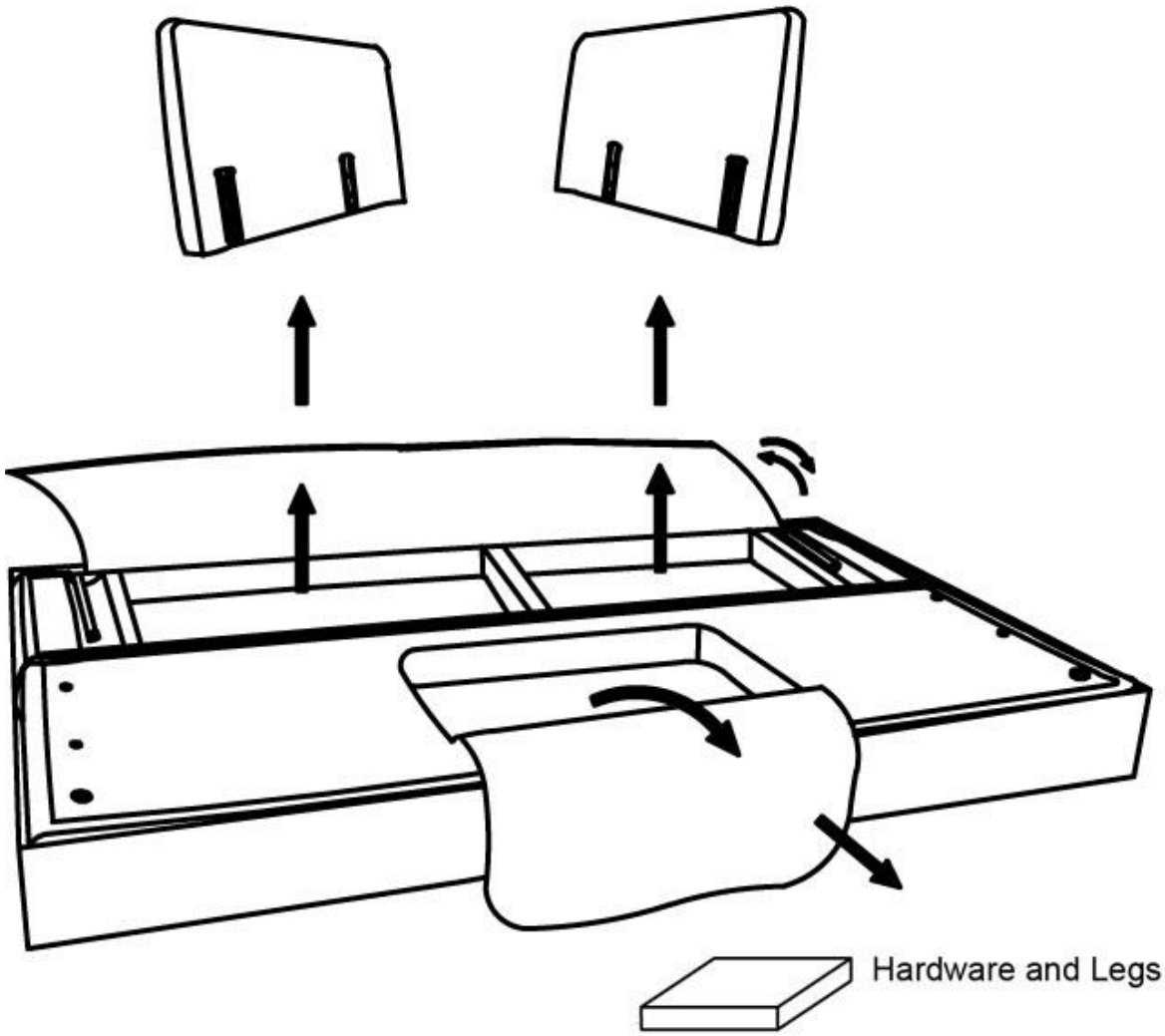

Remove the hardware package and legs from the bottom of the Sofa Bed.

ASSEMBLY

STEP 2

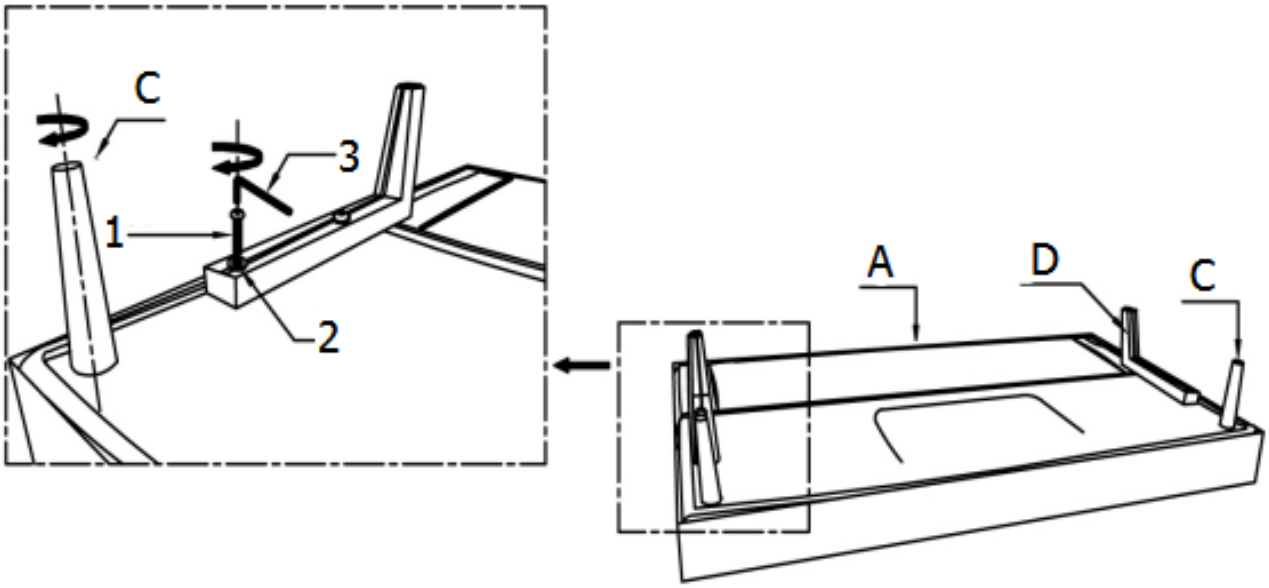

Attach Front Legs (C) and Back Legs (D) to the Sofa Bed (A) using
Allen Key Screws (1) and Flat Washers (2).
Use Allen Key (3) to tighten.

ASSEMBLY

STEP 3

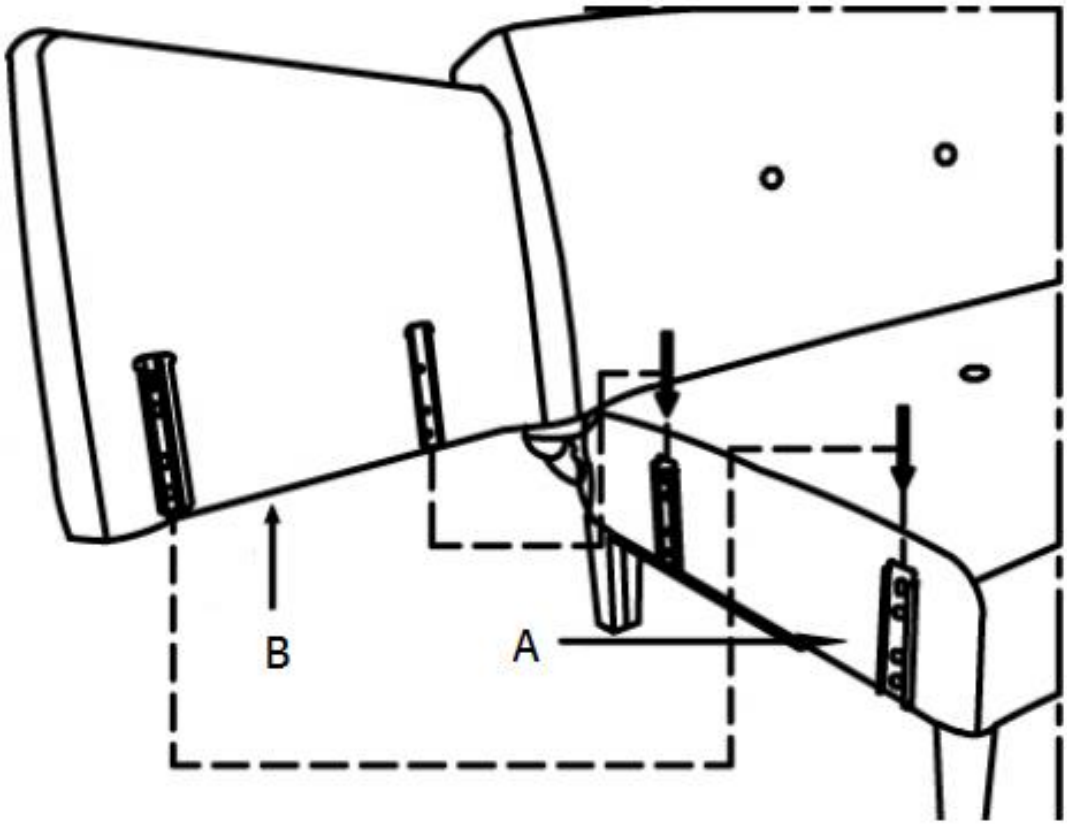

Slide the Arms (B) into the slots on the side of the Sofa Bed (A).

ASSEMBLY

STEP 4

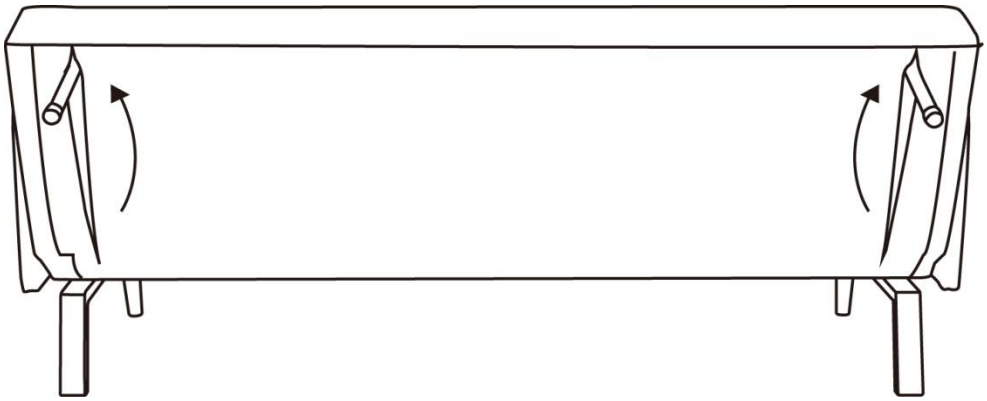

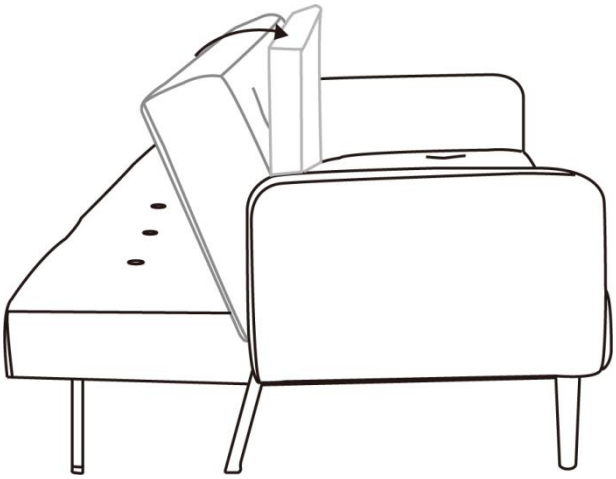

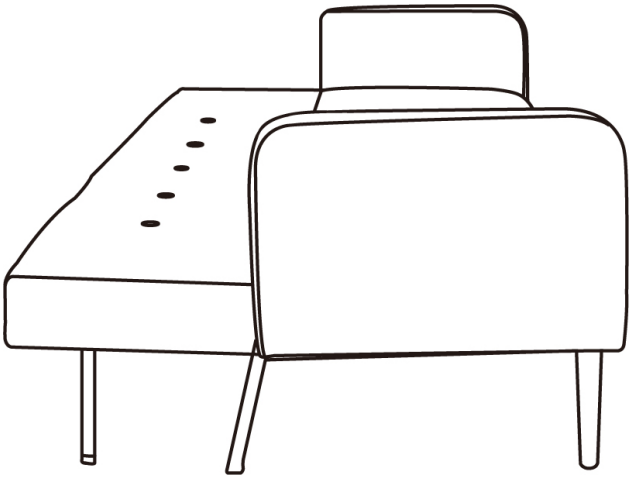

To Change from Sofa to Bed:
Unfold the support legs from the zipped compartment located on the underside of the sofa bed.
Pull the Sofa Back a little forward to unlock it.
Place the Sofa Back in a flat position to use as a bed.

ASSEMBLY

STEP 5

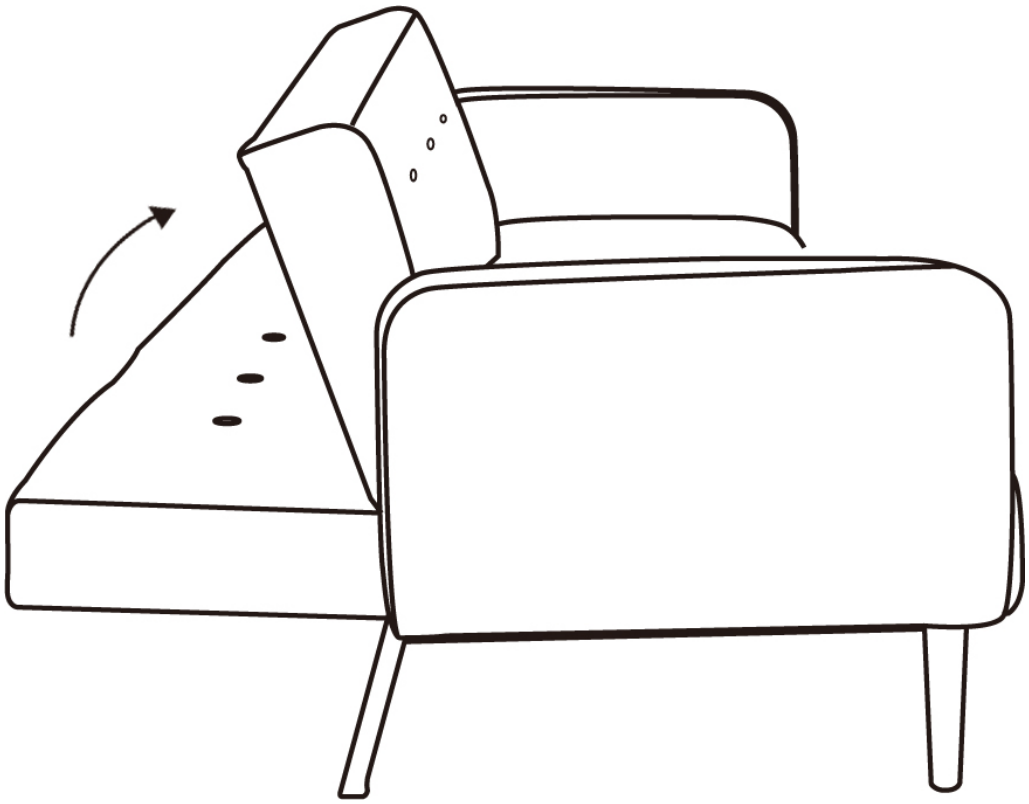

To Change from Bed to Sofa

Lift the Back forward until you hear a click and release back into the Sofa Position.

Ensure Sofa Back is locked in place.

WARRANTY

Thank you for purchasing the product. These products have been made to demanding, high-quality standards and are guaranteed for domestic use against manufacturing faults for a period of 12 months from the date of purchase. This warranty does not affect your statutory rights.

We reserve the right to repair or replace the defective product, at its discretion.

This product is guaranteed for 12 months if used for normal purposes. Any warranty is invalid if the product has been overloaded or subject to neglect, improper use or an attempted repair by other than an authorized agent. Heavy-duty or daily professional/commercial usage are not guaranteed.

Due to continuous product improvement, we reserve the right to change the product specifications without prior notice.