Assembly Instructions

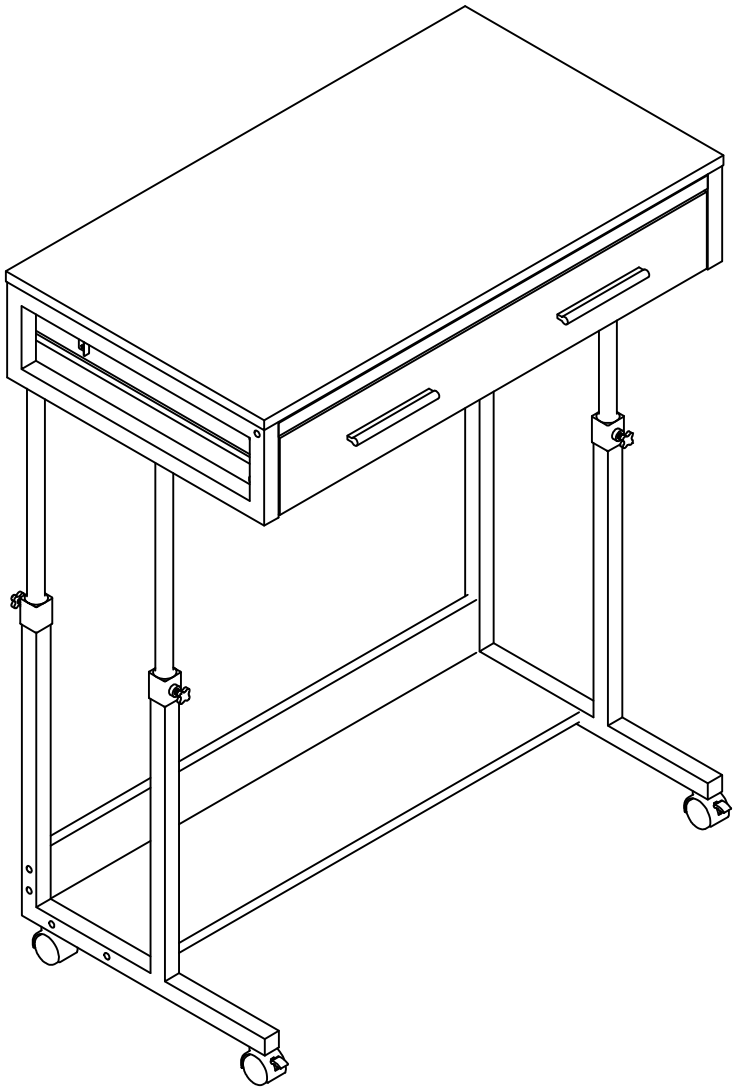

Beside lifting table

Your satisfaction is our top priority. If you encounter any issues with this product, such as missing or damaged parts, we're here to help. Please retain the original packaging and take photos of the packaging and the product, then contact us as soon as possible.

Warm Tips

1. Carefully read these instructions and keep them for future reference.
2. Check the parts list and confirm everything's there before starting assembly.
3. When assembling, put all parts on a soft, smooth surface like a carpet to avoid scratches.
4. Don't fully tighten screws until all parts are confirmed in place to avoid misalignment.

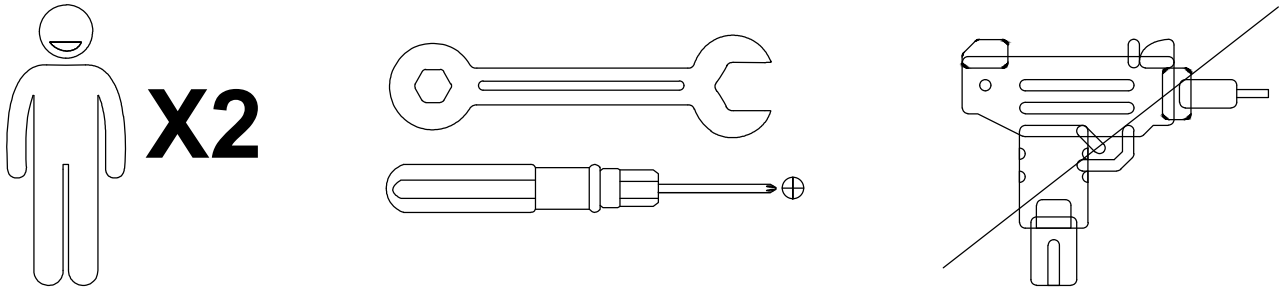

We recommend using hand tools for assembly.
If an electric screwdriver is used, reduce power and torque to avoid damage to the product.

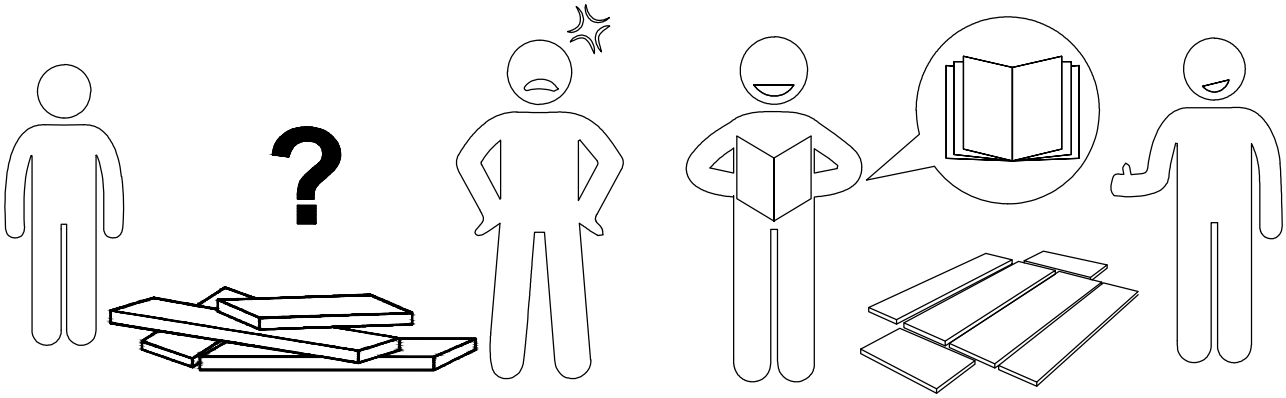

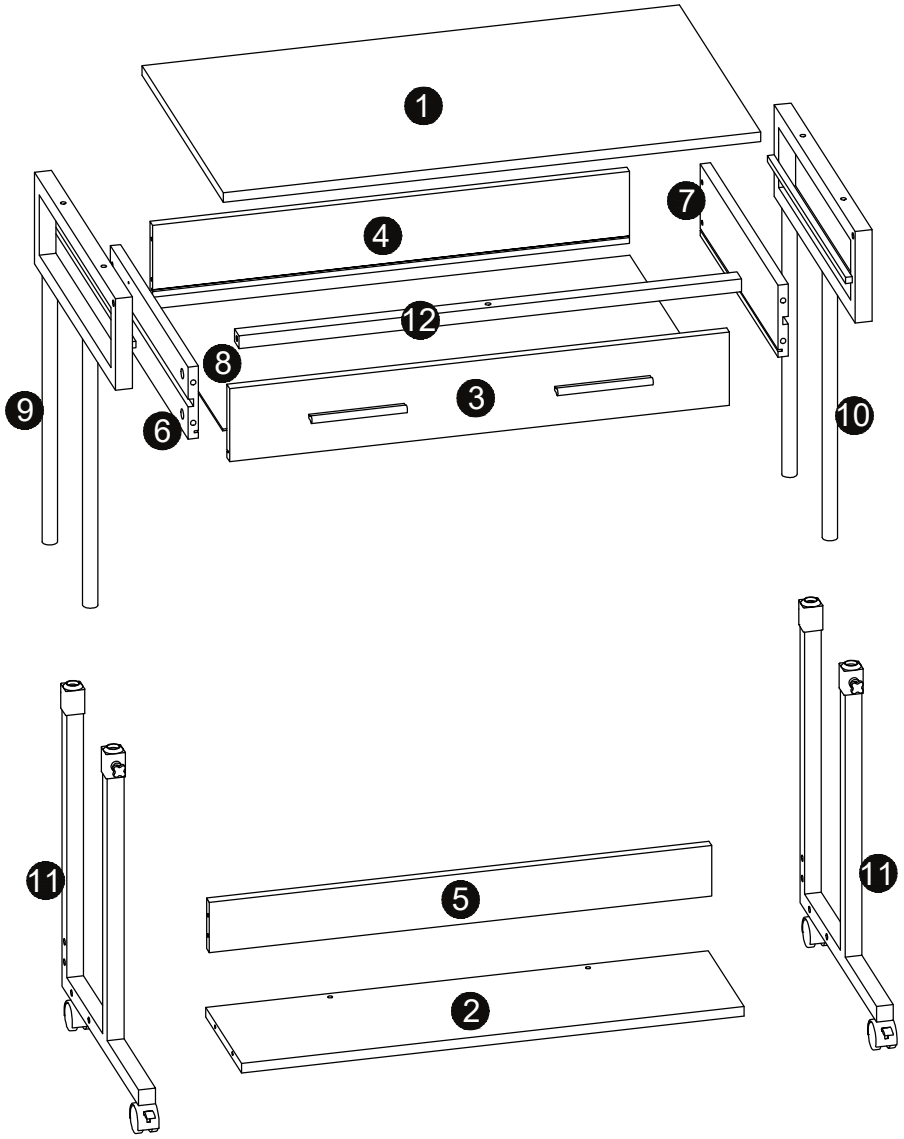

Caution

Make sure all parts are included. Most board parts are labeled or stamped on the raw edge.
Contact us for a free replacement if you encounter any damaged or missing parts.

Parts List

❶ 1 pc	❷ 1 pc	❸ 1 pc	❹ 1 pc	❺ 1 pc	❻ 1 pc
❼ 1 pc	❽ 1 pc	❾ 1 pc	❿ 1 pc	⓫ 2 pcs	⓬ 1 pc

Hardware List

Ø7X60MM A 8 pcs	Ø7X40MM B 6 pcs	M6X40MM C 2 pcs	M6X35MM D 4 pcs	M6X40MM E 4 pcs	M4X18MM F 4 pcs	Ø3.5X14MM G 4 pcs
H 2 pcs	I 4 pcs	J 2 pcs	K 4 pcs	M6X10MM L 1 pc		

Installation of Cams and Pins

Screw the pin into the hole. To set the cams correctly, ensure that the arrow on the cam is opening to the hole of the pin it is locking. Lock the cam by turning the cam head with a screwdriver until it is tightened. Please do not use an electric screwdriver to assemble the unit.

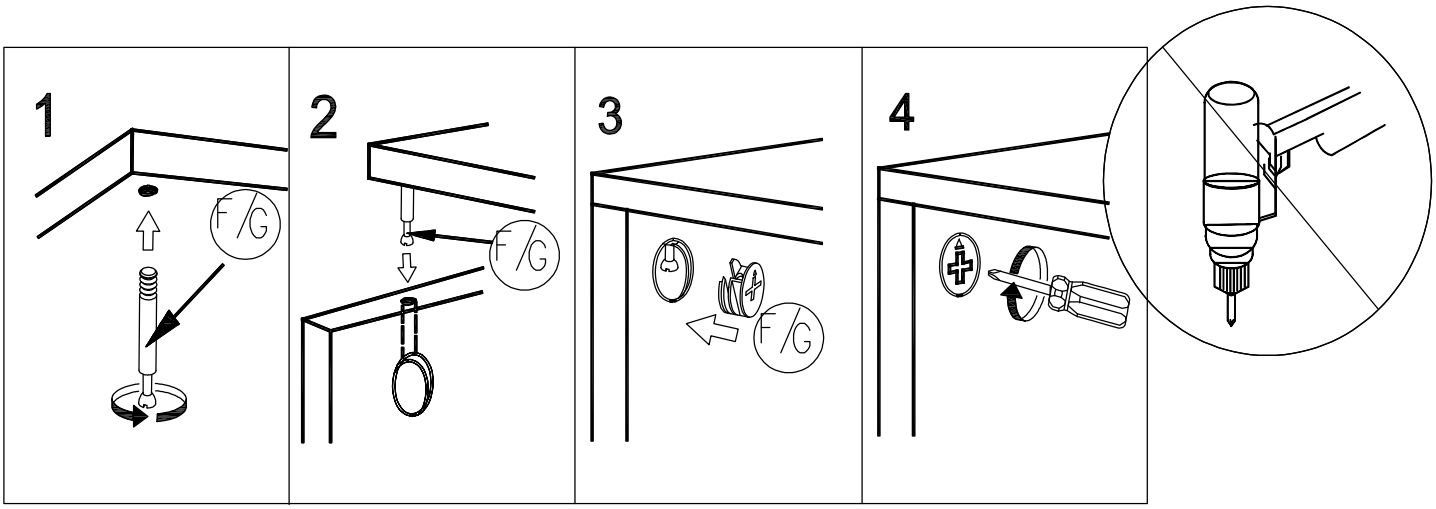

Read each step carefully before starting. It is very important that each step of instruction is performed in the correct order. If these steps are not followed in sequence, assembly difficulties will occur.

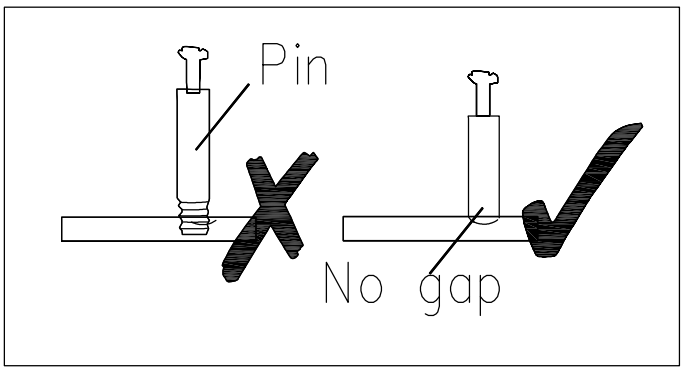

1

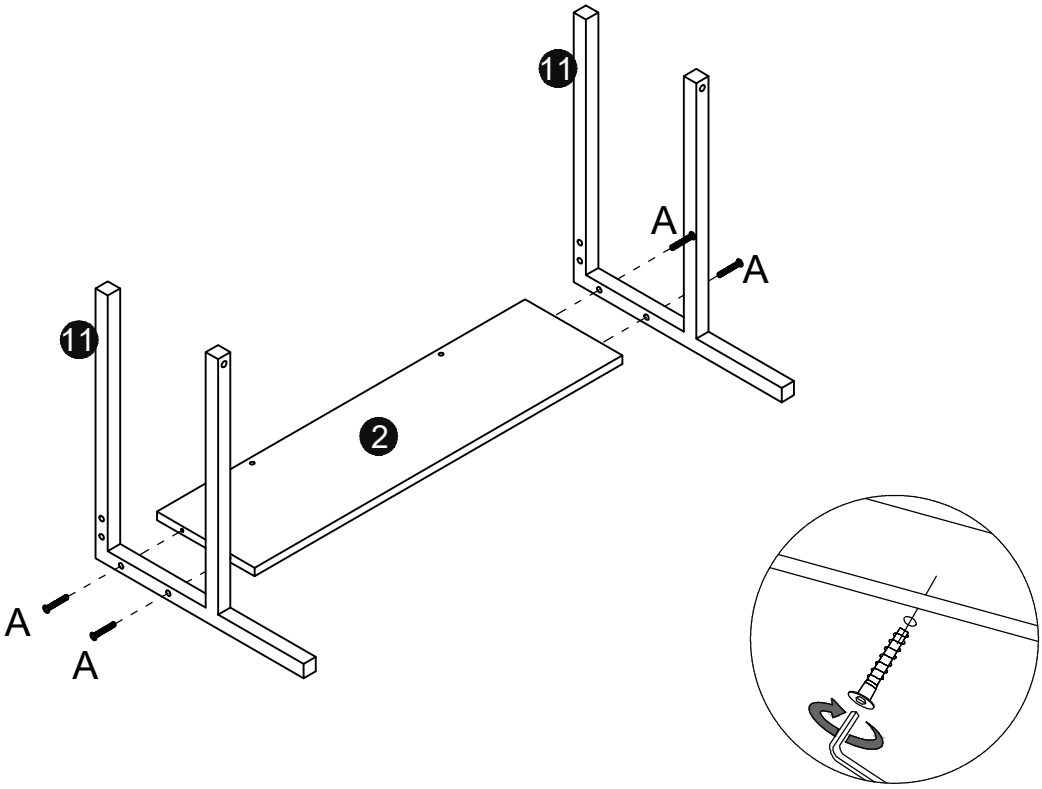

A
4 pcs

2

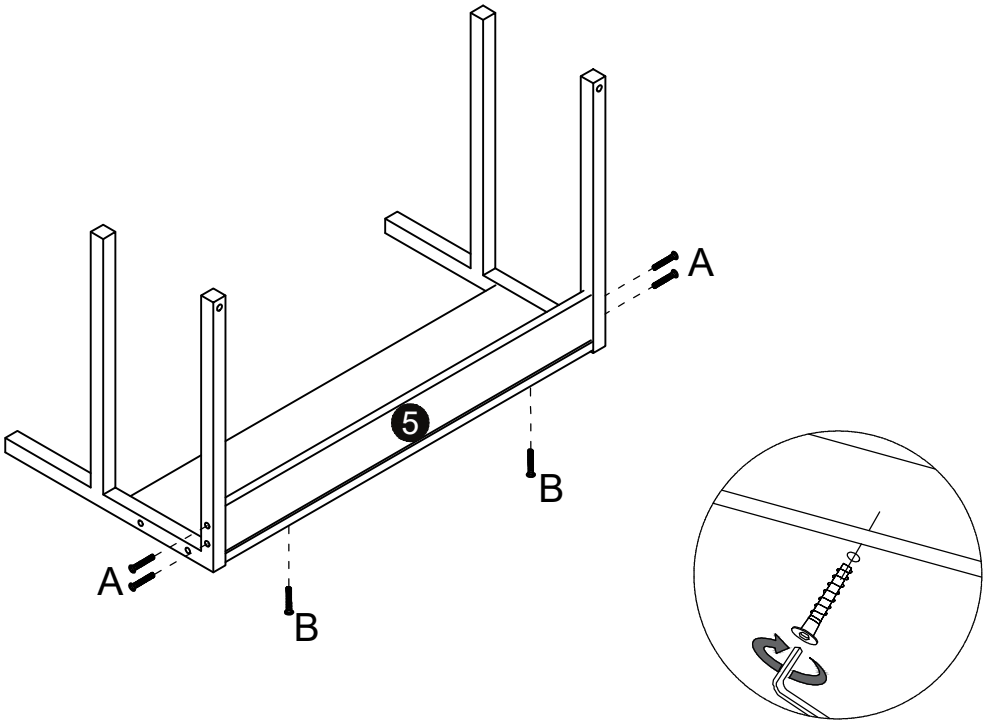

B
2 pcs

A
4 pcs

3

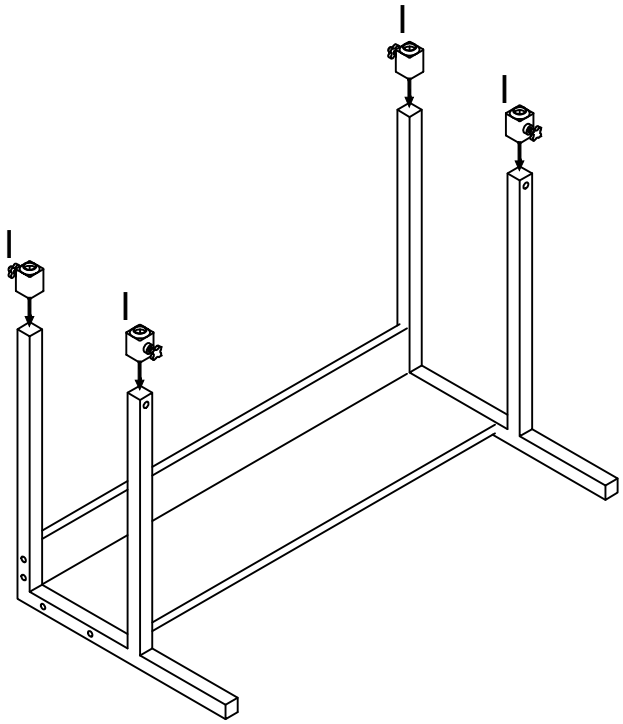

I
4 pcs

4

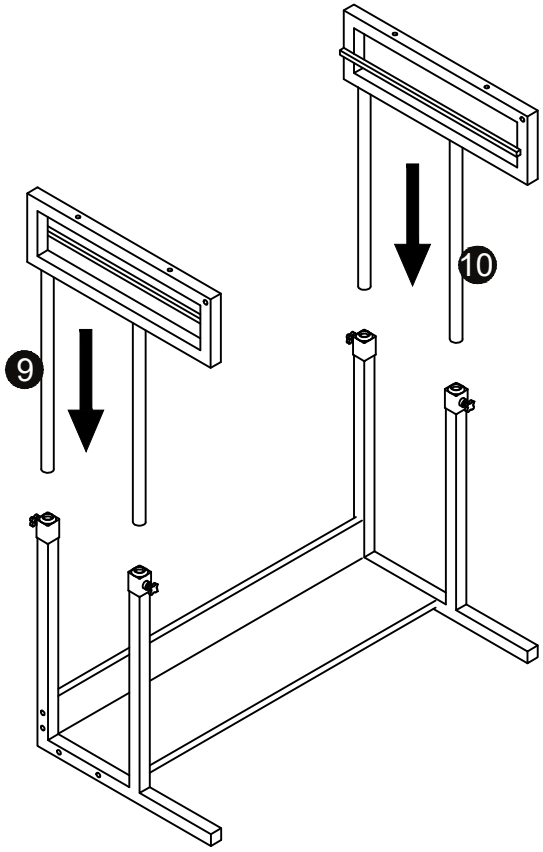

5

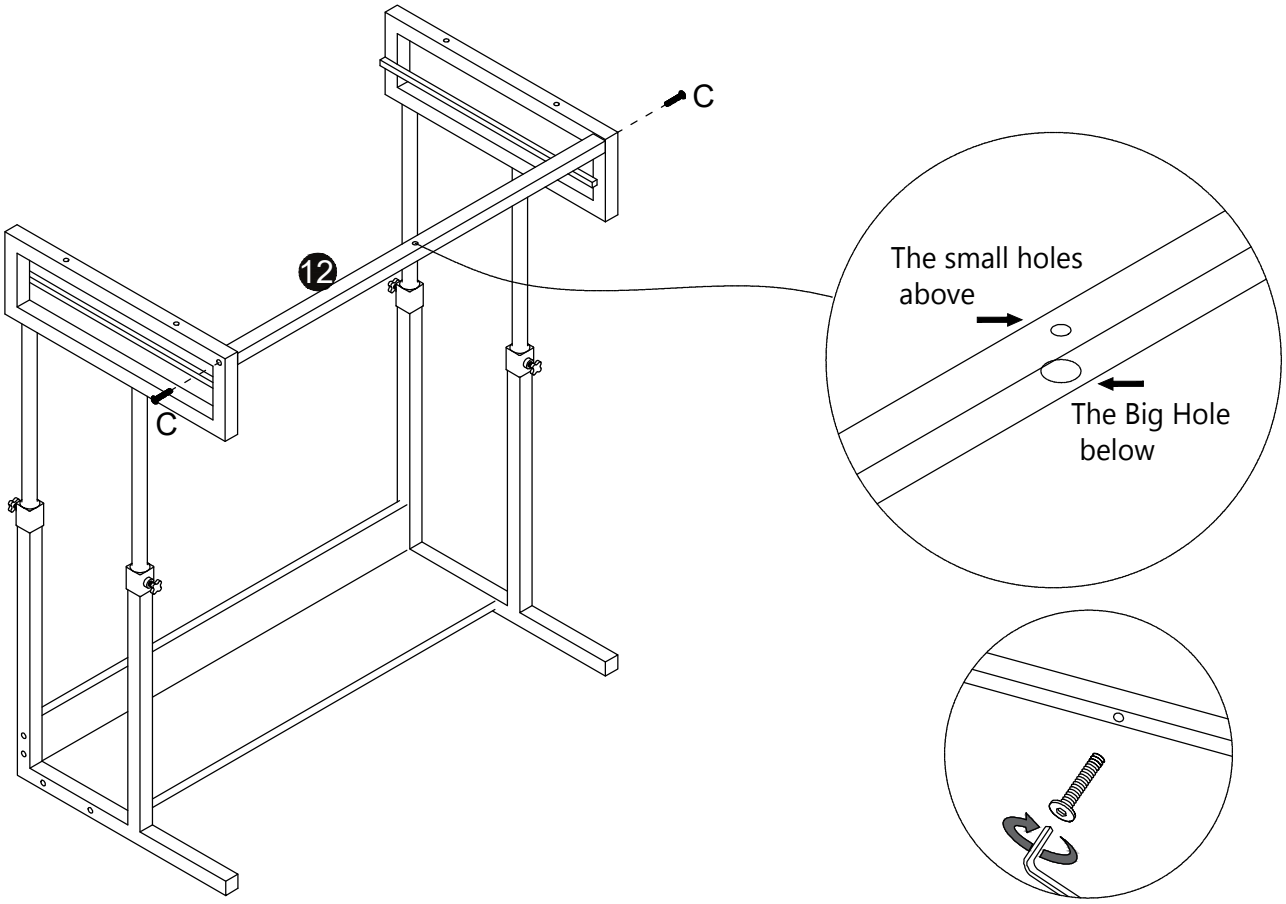

C
2 pcs

6

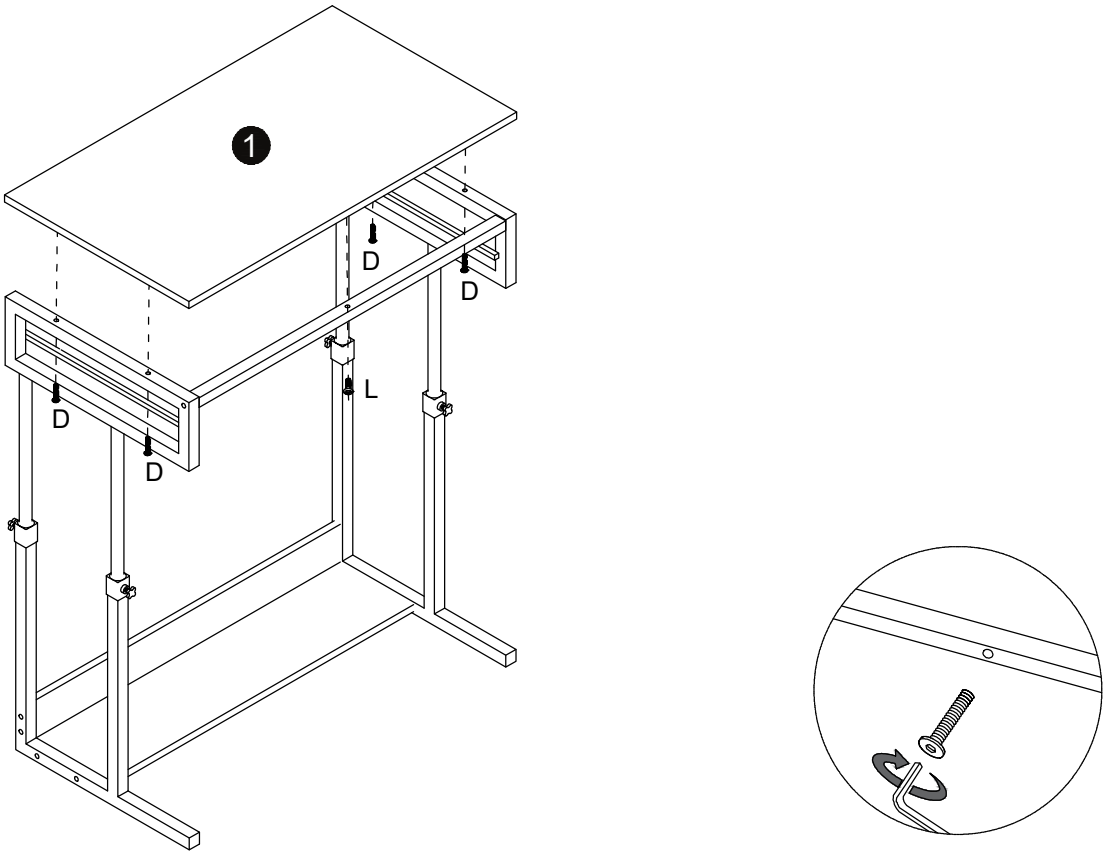

D
4 pcs

L
1 pc

7

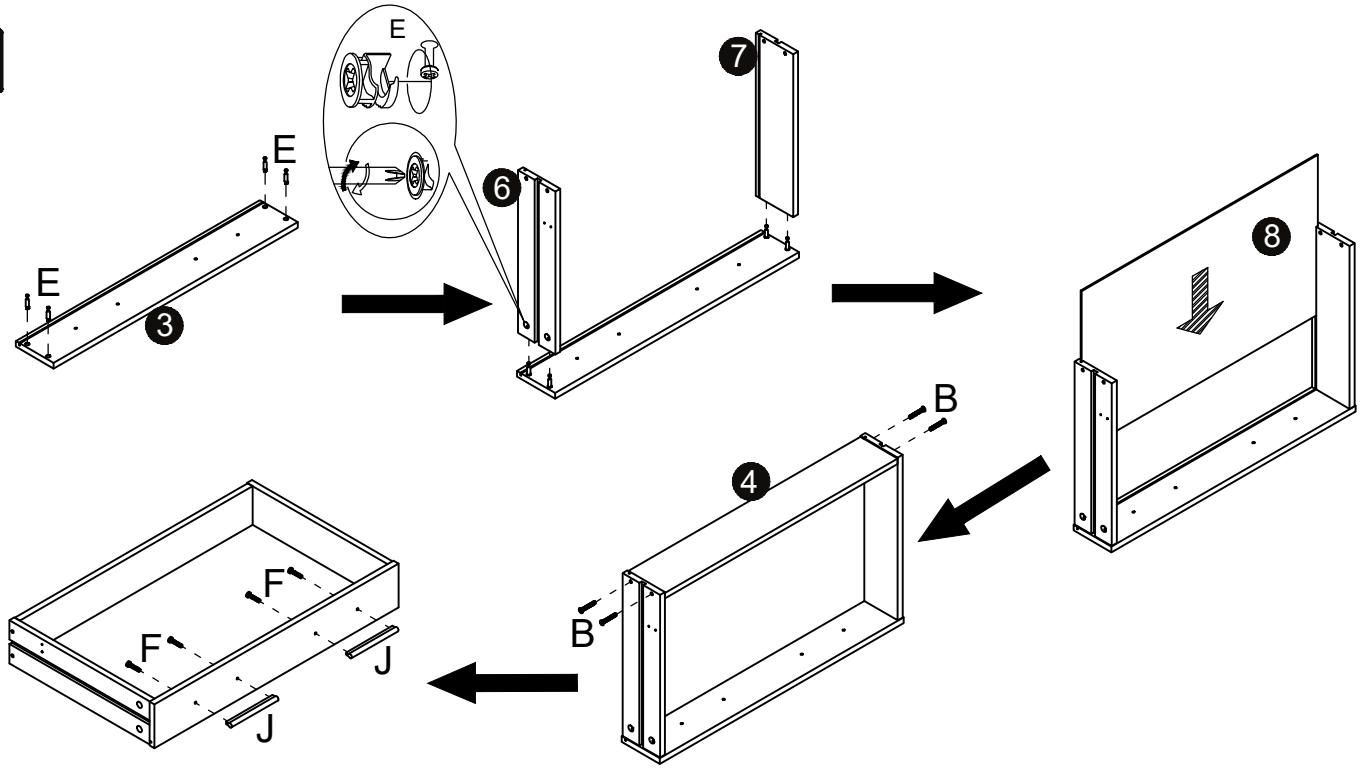

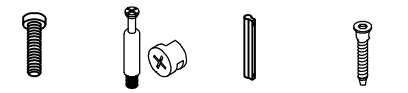

F	E	J	B
4 pcs	4 pcs	2 pcs	4 pcs

8

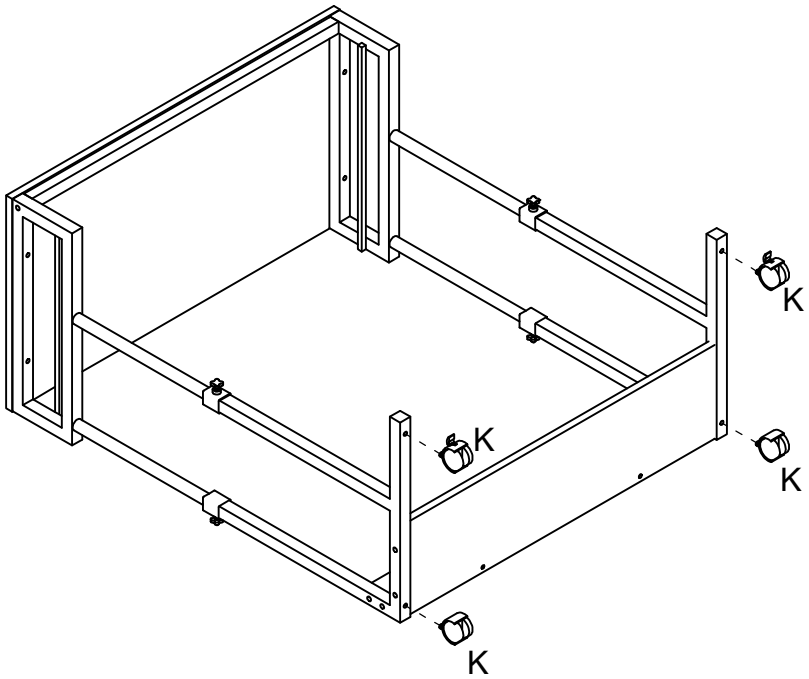

K
4 pcs

9

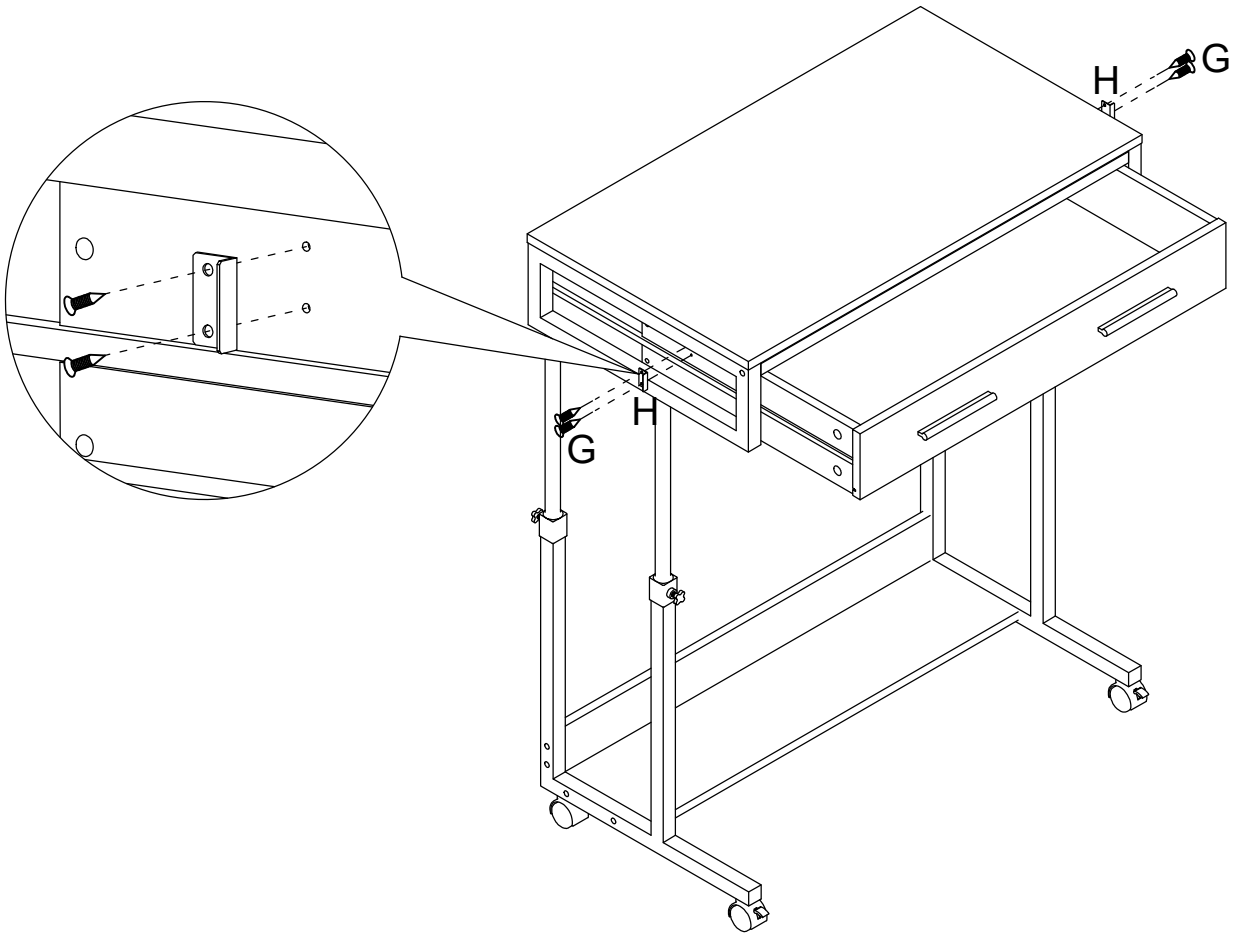

H
2 pcs

G
4 pcs
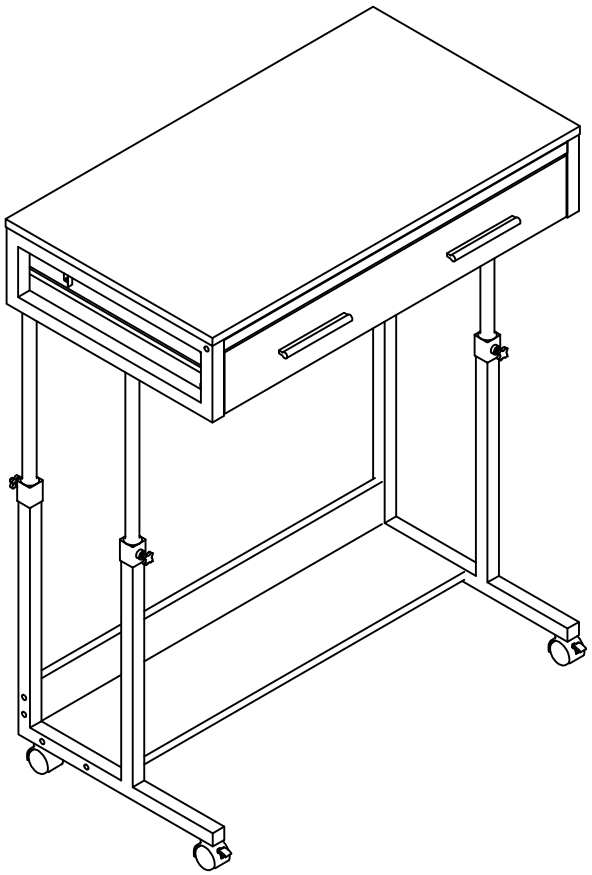
Thank you for your support!