KB4430,1,2,3,5,6,7,8PL
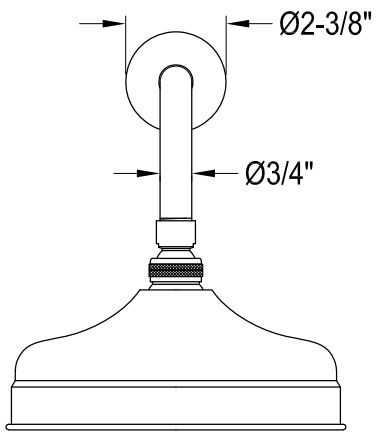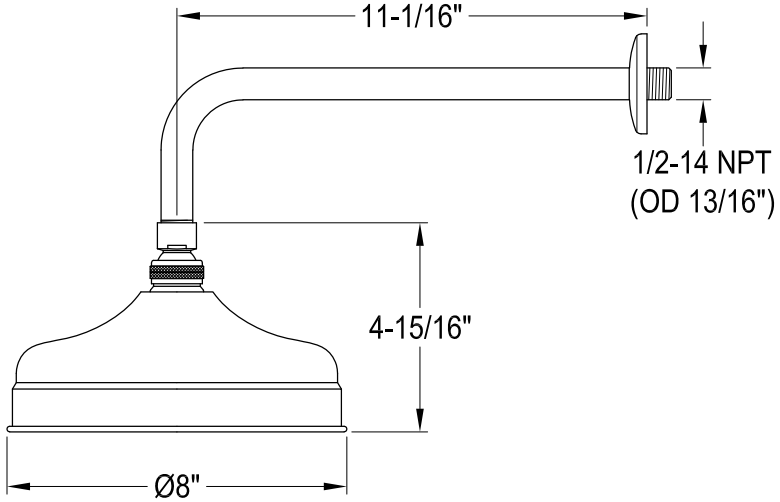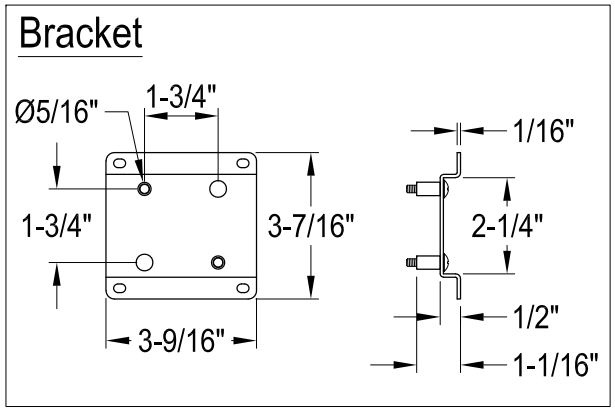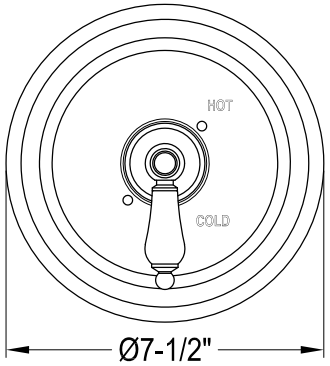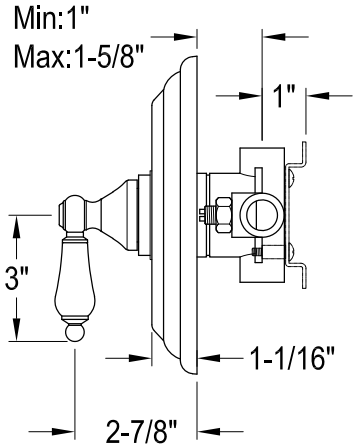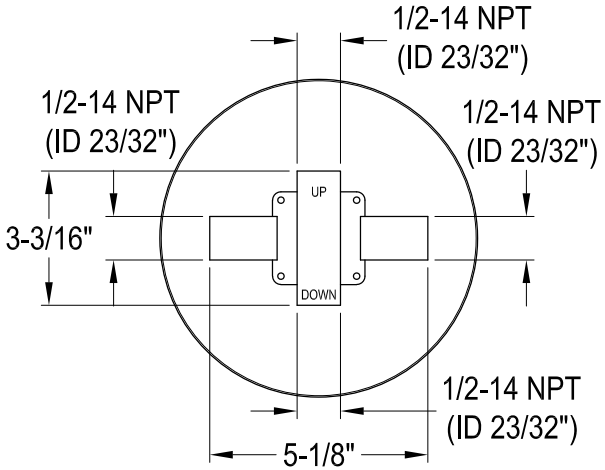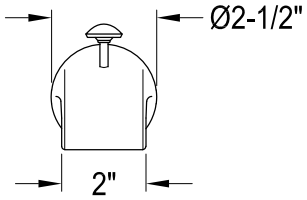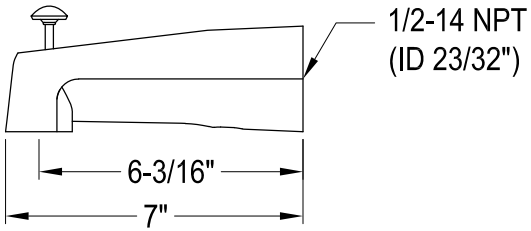
Single Handle Pressure Balanced Tub & Shower Faucet