Assembly Manual
LEATHER OFFICE CHAIR

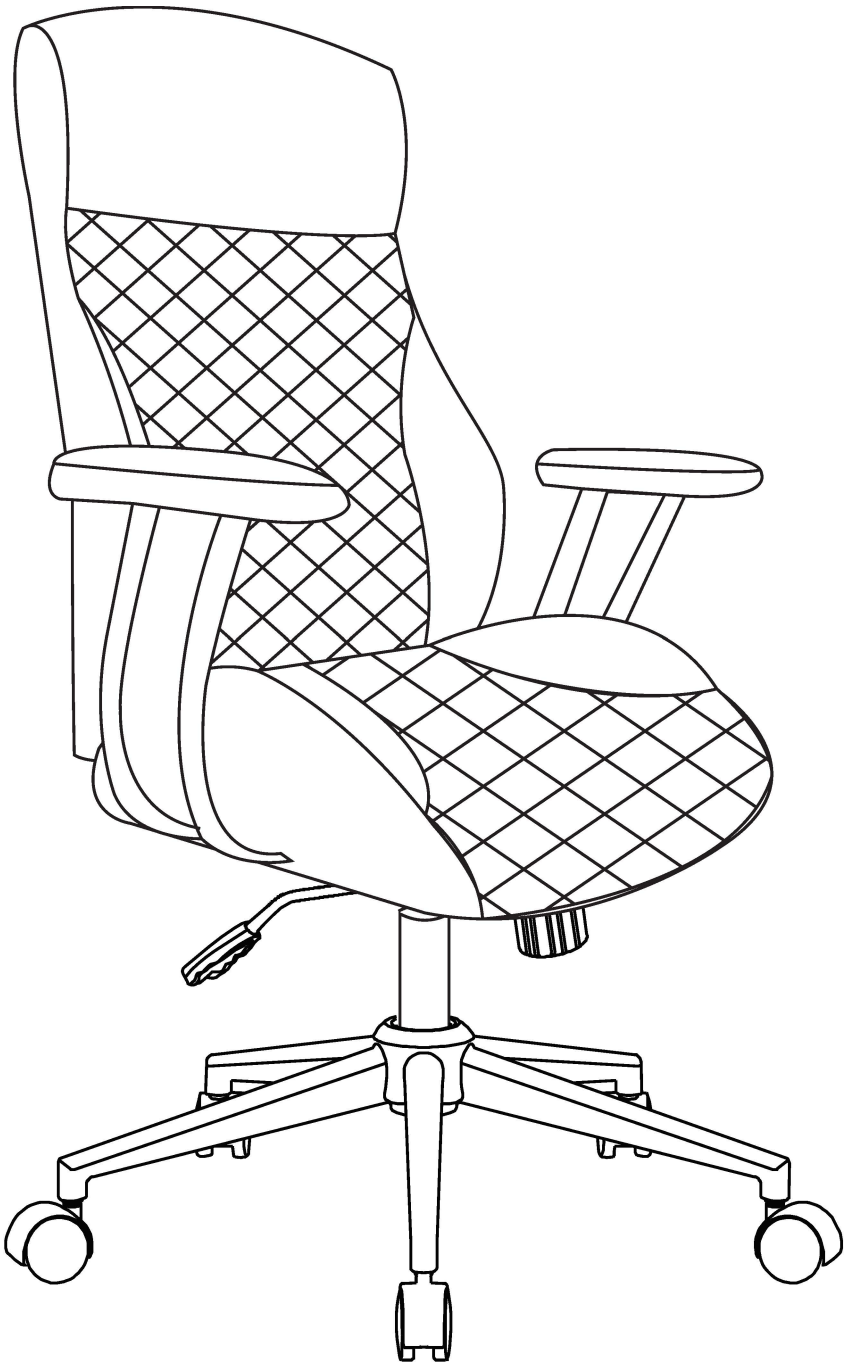

Matters Needed Attention for Chair

Thank you for the recent purchase of our product. We hope you will be pleased with both the product and service you received. If not, please give our helpful customer service team an opportunity to improve your experience right away.

1. Installation Troubleshooting

• The parts are missing or damaged in transportation. Contact us to get replacement parts.

2. Usage Troubleshooting

• Adjust the height of the chair to suit your height. If it is not suitable for you, please contact us for help.
• If the chair is tilted to one side or forward, make sure the screws on the seat plate are tightened; make sure the chassis is not mounted upside down; and contact us if the problem cannot be resolved.
• If the fabric of the chair is torn or stained when you receive it, please contact us to get a replacement part or compensation.
• If the chassis is broken, please contact us for a replacement or partial refund.
• If a part is missing, please contact us and provide a picture of the missing part. We will replace it.

3. Return Request

If you are not 100% satisfied with the chair, please give us a chance to help you solve all your problems with our products.We also need your suggestions to improve the quality of the chairs to avoid the same problems happening again.

Product Overview

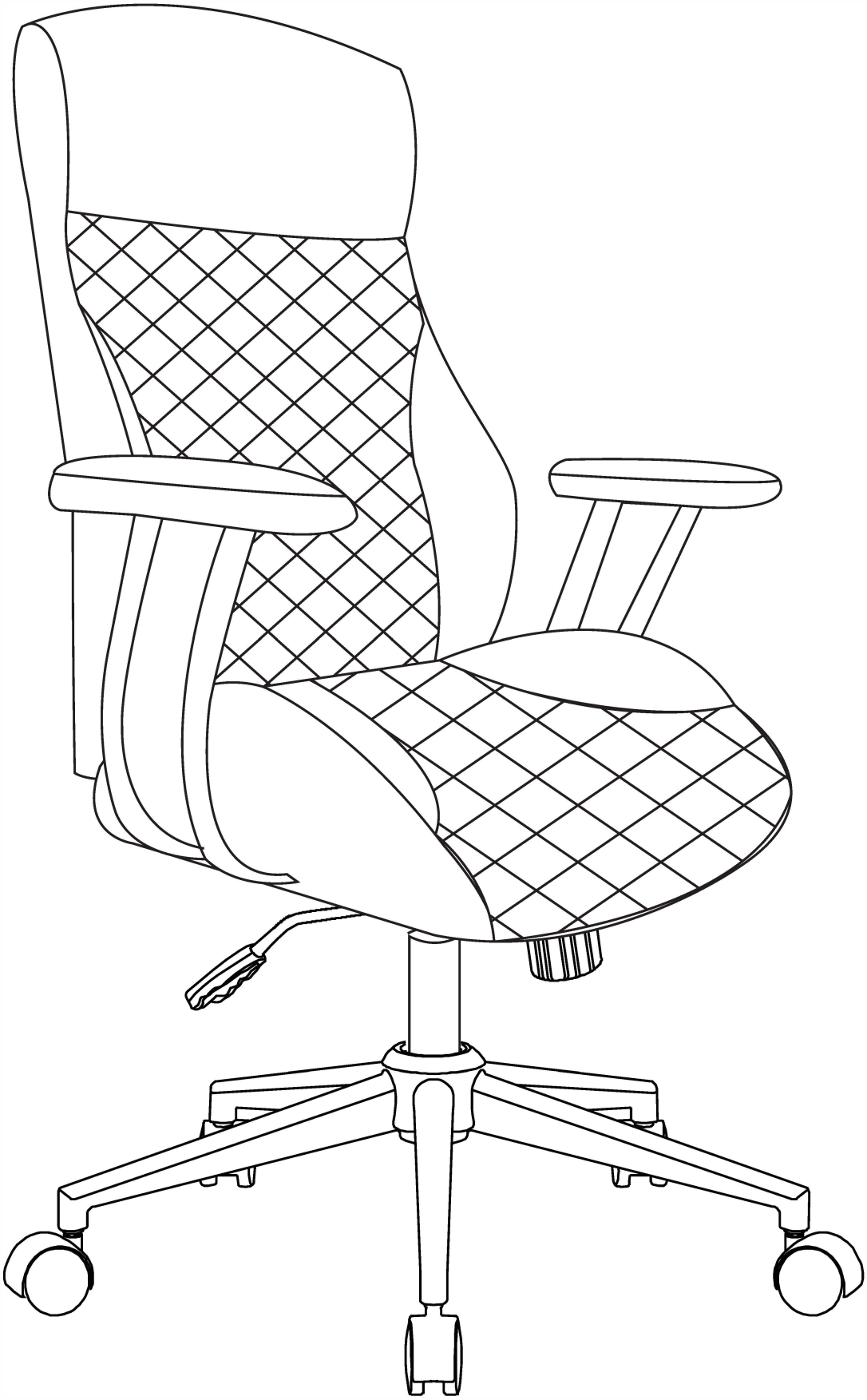

Accessories List

A:Backrest×1

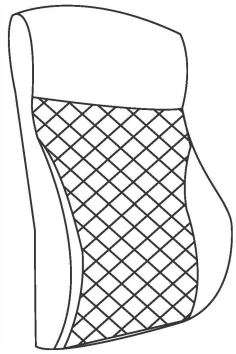

B:Seat Cushion×1

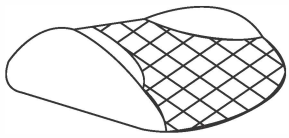

C:Armrest Pad×2

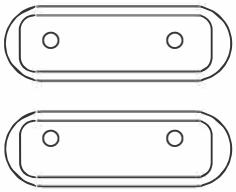

D:Armrest Frame×2

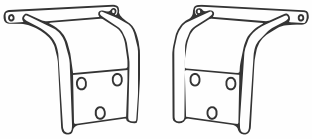

E:Base Plate×1

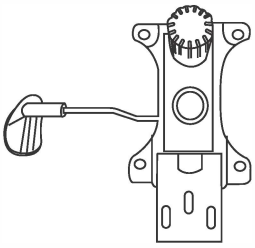

F:Air Rod×1

G:Base Tube×5

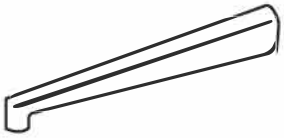

H:Central Base Tube+Central Base Buckle×1

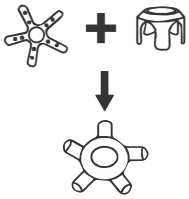

K:Steel Plate×1

L:M6*20mm×10

P:M6*25mm×2

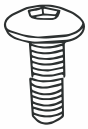

J:Castors×5

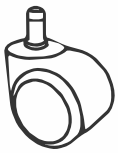

M: M6*20mm×4

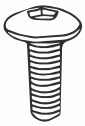

N: M6*20mm×6

O: M6*20mm×2

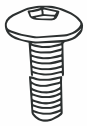

Qx3
M8*20mm×3

Rx4
M6*30mm×4

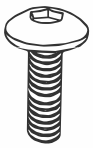

S:T-shaped wrench×1
Hexagon Wrench×1

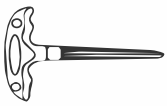

Assembly Instruction

STEP 1

Install the Base Tube. Insert 5 base tubes (G) into the central base tube (H), align the holes, hand-tighten 10 M6×20mm screws (L) with the T-shaped wrench,
then firmly tighten all screws with the L-shaped wrench.

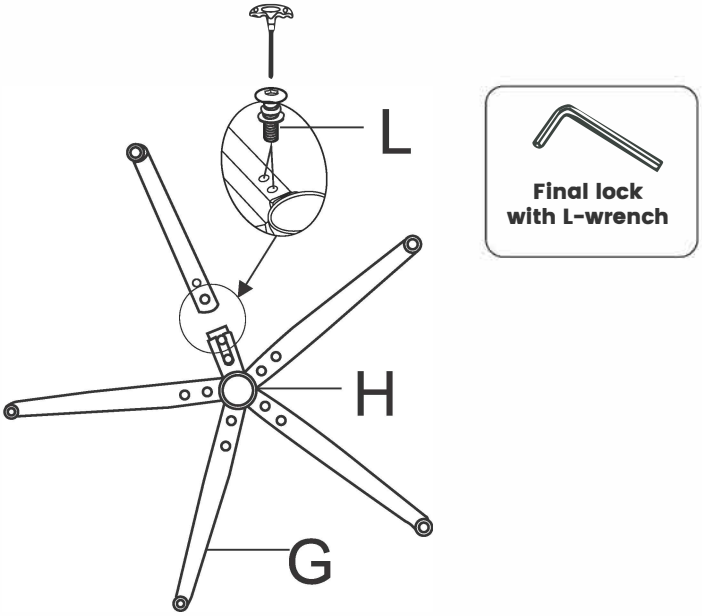

STEP 2

Attach the casters, air rod, and central base buckle.
Insert 5 casters (J) into the base tubes (G). Please make sure the casters are securely installed before use.
Put the air rod (F) through the central base buckle (H) into the hole of the central base tube (H).

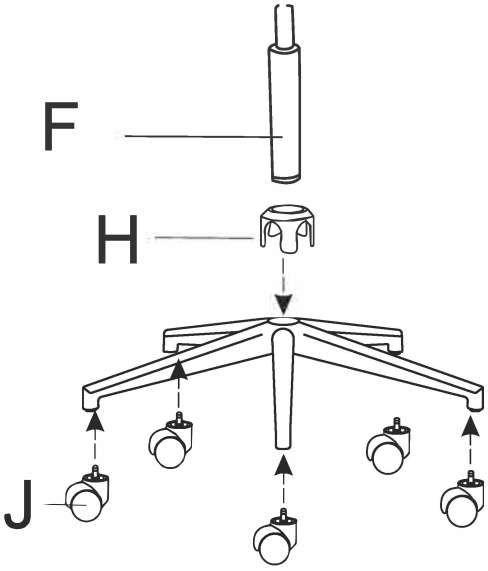

STEP 3

Align armrest support rod (D) with armrest surface (C). Secure using screws M(M6x20mm). An L-shaped wrench is recommended. Making sure not to mix up the left and right sides.

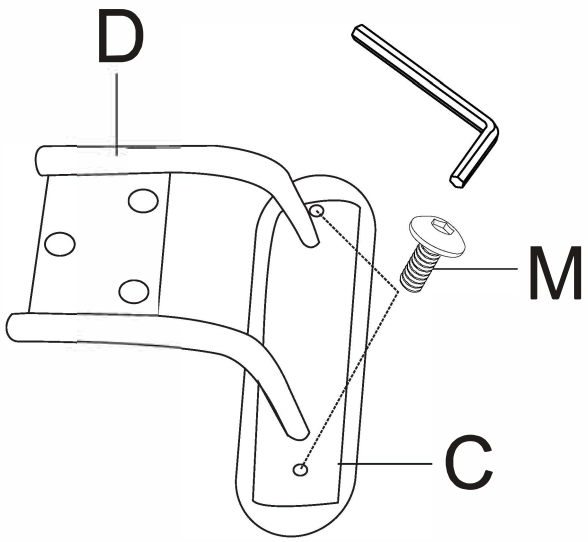

STEP 4

Secure the assembled armrests to the seat back (B) using screws M6×20mm (N), making sure not to mix up the left and right sides.

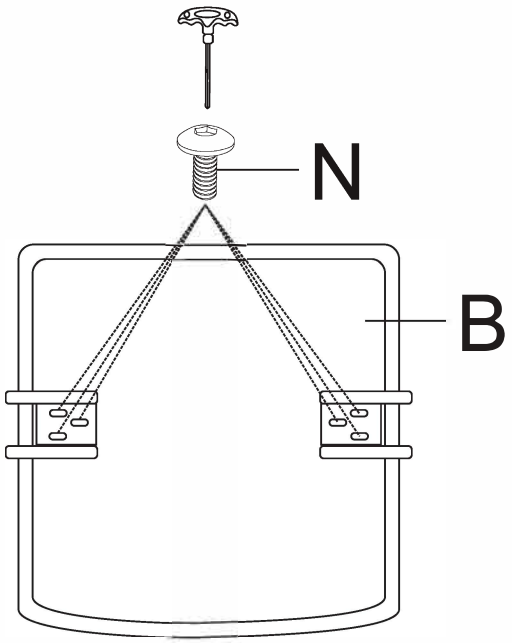

STEP 5

Use 2 M6x25mm screws (P) and 2 M6x20mm screws (O) to attach the base plate to the seat cushion.

NOTE: Ensure the "FRONT" labels on the seat and base plate are aligned.

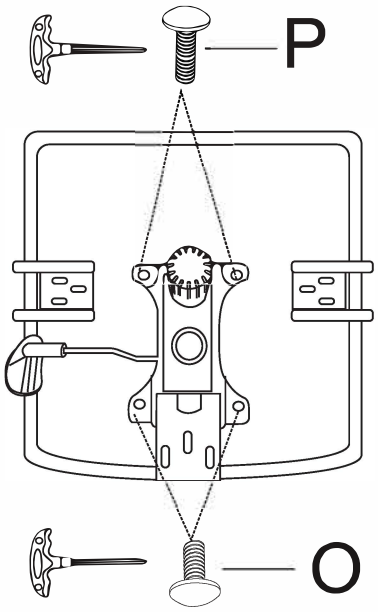

STEP 6

Use 3 M8x20mm screws (Q) to secure the keel (K) to the seat back.

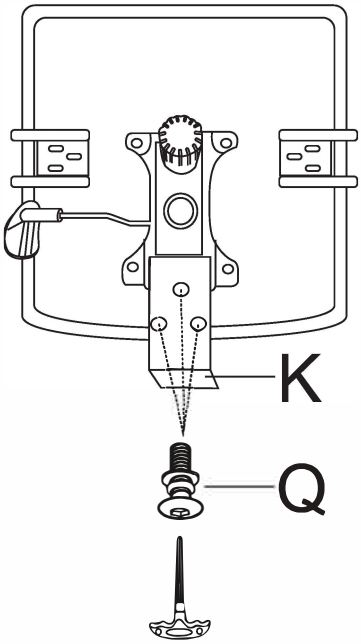

STEP 7

Align the hole on the base plate with the air rod, then press the seat cushion firmly until it locks into position.

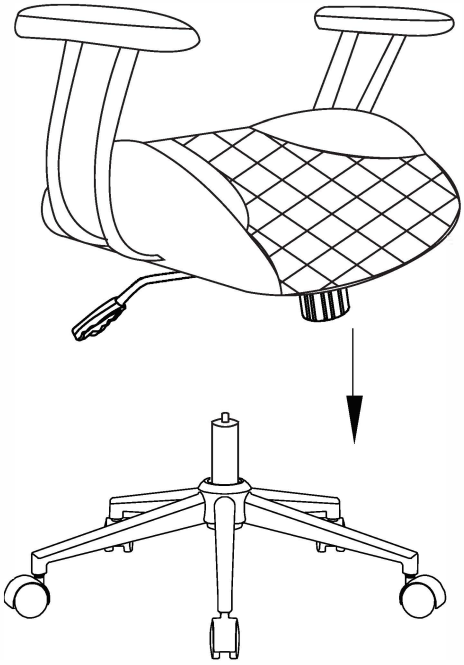

STEP 8

Use 4 M6x30mm screws (R) to secure the chair back (A) to the keel.
Tip: Insert all screws before fully tightening.

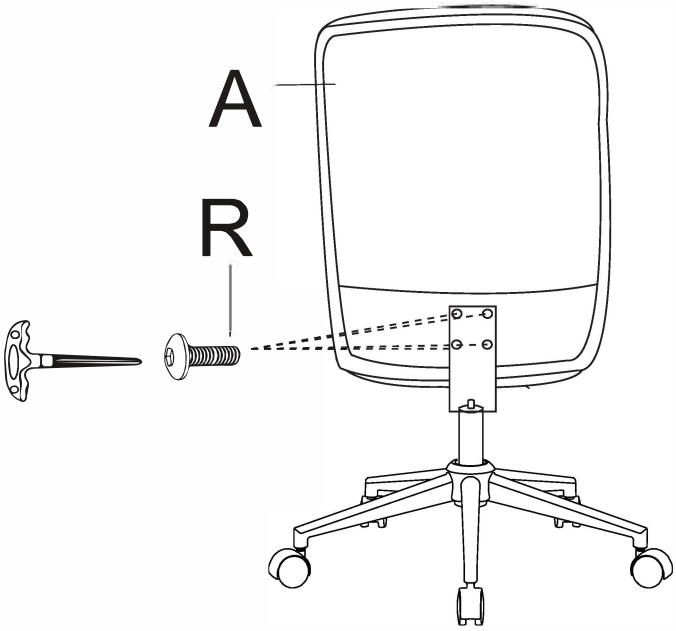

Assembly Instruction

STEP 9

Congratulations! Assembly complete!

Instructions for Use

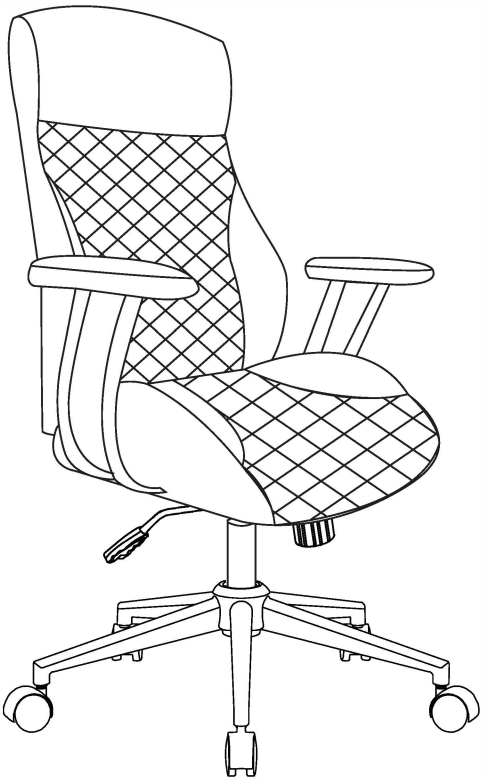

Instructions for Use

1. While seated, slightly lift your body up.
2. Pull the side lever upward and hold.
3. Release the lever when your desired height is reached.

To lower the seat:

1. While seated, pull the side lever upward.
2. The seat will descend gradually.
3. Release the lever to lock the position.

Note: If the seat height changes unexpectedly or cannot be adjusted properly, please contact us for assistance.

Recline & Lock Function

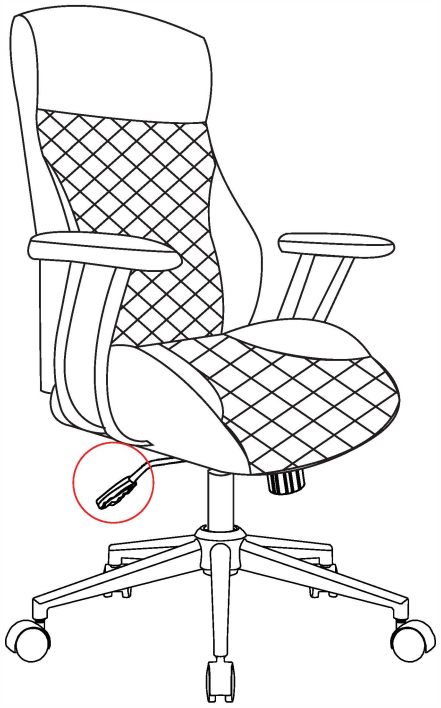

To Recline (Lean Back):

1. Sit on the chair and lean back slightly.
2. Pull the lever on the right side outward (→) to unlock the recline function.
3. Lean back to your desired angle.
4. Push the lever inward (←) to lock the reclineposition. The chair will not spring back automatically. You control the angle.

To Return to Upright Position:

1. Pull the lever outward (→) again to unlock.
2. Lean back slightly, then release. The chair will spring back to the upright position.
3. Push the lever inward (←) to lock the upright position.

To Adjust Recline Resistance (Optional)

Firmer (for heavier users): Turn the knob under the seat counterclockwise.

Easier (for lighter users): Turn the knob clockwise.

This only affects how much force is needed to recline, not the lock function.

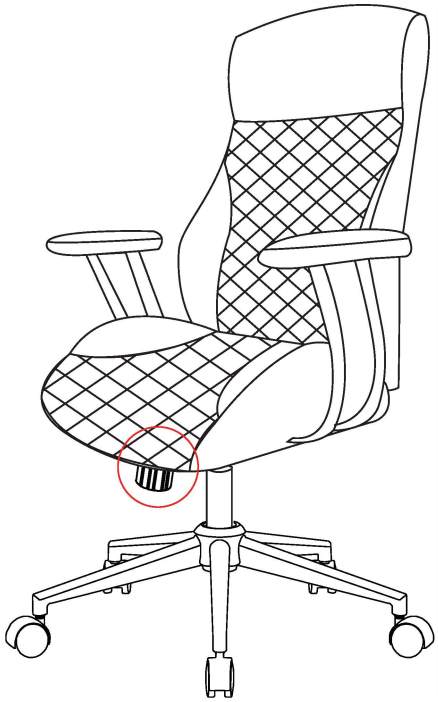

Matters Needed Attention for Chair

Thank you for the recent purchase of our product. We hope you will be pleased with both the product and service you received.If not, please give our helpful customer service team an opportunity to improve your experience right away.

2. Installation Troubleshoot

- The parts are missing/damaged in transportation, contact us to get replacement part.
- The screws can not cannot be inserted or the slots for the screw is stripped, contact us to get help.

Chair Safety Warnings

1. General Safety Warnings

·"This chair is designed for office or home use only. Do not use it for industrial, medical, or other unintended purposes."
·

2. Assembly Warnings

·"Follow the assembly instructions precisely. Incorrect assembly may lead to instability or collapse."
·"Ensure all screws and bolts are fully tightened before use. Check periodically for looseness."

3. Usage Warnings

·"Do not stand on the chair or use it as a step ladder. The chair is not designed to support dynamic loads."
·"Avoid leaning back excessively or rocking the chair violently, as this may cause tipping."

4. Adjustment Warnings

·"Adjust the seat height so your feet rest flat on the floor. Improper adjustment may cause posture-related injuries."
·"Do not force any adjustable mechanisms (e.g., armrests, lumbar support) beyond their designed range."

5. Maintenance Warnings

·"Use only mild cleaners. Harsh chemicals may damage materials or weaken structural integrity."
·"Inspect the chair regularly for wear and tear (e.g., gas cylinder, wheels). Replace damaged parts immediately."